national accelerator laboratory

TM-246
0420

A POSSIBLE REDUCED-COST METHOD FOR FABRICATION OF NAL-TYPE MAIN-ACCELERATOR MAGNETS

P. J. Reardon and R. Sheldon

May 15, 1970

I. INTRODUCTION

The use of a combination of the techniques evolved for the production of the main-accelerator and booster magnets at NAL have led us to propose a magnet-fabrication technique for synchrotron magnets that makes best use of both the techniques employed and that could result in a considerable cost saving over methods employed heretofore. The basic feature of the proposal is that the magnet is fabricated into a monolithic structure using unimpregnated coils and subsequently the whole assembly is impregnated using radiation-hard epoxy resin material.

The design includes a three-coil system, two of which are of a simple pancake design. The gap coil is necessarily of a saddle design and is originally wound in a flat pancake form followed by bending-up procedure. As shown in the attached preliminary sketch, the other two pancake coils would also be bent up in place after insertion in the magnet. Therefore, this permits the use of a single-piece lamination with the coils being introduced into the assembled core prior to impregnation and at least the throat coils being bent up in situ. It is expected that

Operated by Universities Research Association Inc. Under Contract with the United States Atomic Energy Commission

the use of this technique in synchrotron-magnet fabrication will result in an overall cost saving of about 20% over the present NAL design. In addition to these cost savings, the use of a single-piece lamination improves the ultimate precision of the magnet and reduces the problems associated with tolerance control.

A further advantage of this proposal is that the complete magnet assembly can be procured from a single large producer, making maximum advantage of economy of numbers and reducing the need for assembly and storage space on site, since the completed magnet units can go straight into the tunnel complex directly from the manufacturer plant.

II. PROPOSED FABRICATION PROCEDURE

As indicated above, the use of a single-piece lamination is proposed, and therefore conventional stacking techniques would be used to produce a single-piece core of approximately the same dimensions as the NAL current main-accelerator magnet, which has good field characteristics up to a field of approximately 22.5 kG. Assuming that the core length is similar to the present NAL design, the total finished unit length would be increased by approximately 4 inches due to the use of pancake coils for outer window coils in this design if they are not subsequently bent up in place. This could result in some small additional costs due to increased tunnel length of approximately 300 ft out of the total of 4 miles of tunnel. The present NAL support system would be modified to use two angles, as shown in Fig. 1. These would

be welded along the length of the magnet to provide a resin-tight box structure. In addition, the one-piece lamination system improves the rigidity of the structure.

III. COIL FABRICATION

As indicated in the introduction, the coil would consist of three separate units. The outer window coils would be wound as single-layer pancake coils and supported on the winding fixture during the introduction into the core. Because of the use of hairpin outer coils, it is possible to pretape the coils during the winding process. The throat coil will be wound similarly, as a flat pancake and introduced into the core on a collapsible gauge bar. It has been shown that, using the techniques developed during the coil fabrication at NAL, it is possible to bend up a single layer coil without significant damage to the insulation if adequate precautions are taken. Some premachining of the conductor at the bend area to minimize the key stoning and ease the bending process would be employed. It follows then that the bending-up process could be applied either to the throat coil or to the whole coil assembly, the window coils being bent up first as shown in Fig. 1. Following the bending process, necessary insulation repairs and relevant electrical and physical checks, the whole magnet assembly is vacuum encapsulated, resulting in a fully bonded, void-free insulated unit.

IV. COSTS

It is of value to consider the cost savings resulting from this proposal. It has been well established from the NAL studies that the total core cost is markedly influenced by the stacking and stamping operations. In fact, it can be shown that for a finished magnet, the cost of these operations comprises approximately 40% of the total core cost. Provided that a simple design is maintained, a saving of about 20% in stamping and stacking can result from the use of a single lamination.

Consideration of the coil cost yields the following data: first, the coils must not be beyond the art, otherwise manufacturers rightly load their price with contingency costs. If one considers the cost of the NAL outer coils and then estimates the labor content, it is possible to arrive at an accurate figure for the method proposed above, assuming that the material cost would, of course, remain constant. It can be shown that the labor content of the coils can be halved and this, coupled with a saving on assembly time, results in a 30% overall saving on the coil cost. This, together with the saving on the core fabrication, yields a magnet cost approaching 20% less than the present NAL design of about 2 k$/meter with the magnet having an operating field of 20 to 22.5 kG.

V. CONCLUSIONS

The foregoing indicates that it appears to us there are further economies to be made in the design of synchrotron magnets and that the

final main-accelerator magnet costs of a large accelerator can be a small part of the total laboratory cost.

Further studies are being pursued at NAL on this type of magnet design for use in the experimental areas and beam transfer, and further data will be published as they become available.

VI. ACKNOWLEDGMENTS

Acknowledgment is made to Dr. Robert Rathburn Wilson, the director of the National Accelerator Laboratory, who was responsible for the basic conceptual design of this type of synchrotron magnet and who has constantly insisted and demonstrated that further economies can and will be made in the fabrication of synchrotron magnets. Furthermore, the ideas presented in this paper result from discussions with many of our colleagues at NAL, in particular H. Hinterberger who was most helpful in clarifying ideas and providing the necessary skepticism.

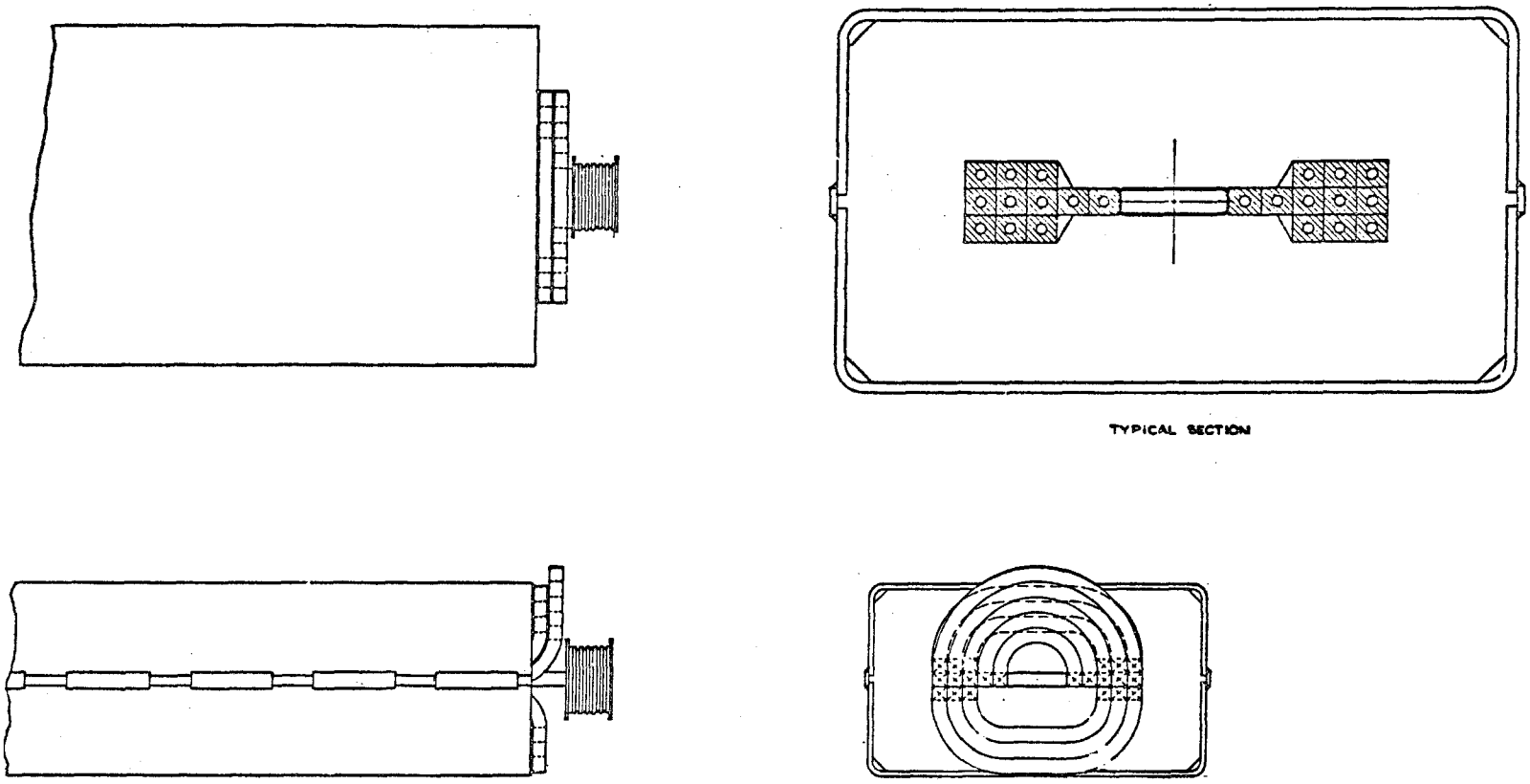
REVISIONS
SYM
DESCRIPTION
BY
DATE
APPR
DATE
TYPICAL SECTION

Fig. 1