March 1997
FERMILAB-PROPOSAL-0887

E-887 (Pasquinelli) A RFQ Linear Acclerator for PET Isotope Production

Fermilab
(and Biomedical Res. Found., Sci. Appl. Int'l. Corp., Washington)

Status: *No Data Yet*

1. Introduction

In 1995, Fermilab and Science Applications International (SAIC) formed a collaboration with partners from the University of Washington (UW) and the Biomedical Research Foundation of Northwest Louisiana (BRF) to explore an innovative approach to the production of radioisotopes. The accelerator system that is being developed accelerates ^{3}He to 10.5 MeV and then delivers it to the target to produce the short lived radioisotopes of interest to the PET community (^{18}F, ^{15}O, ^{13}N, ^{11}C).

The innovations in the accelerator system include multiple RFQ accelerators configured in series, a gas-jet stripper to doubly charge the low energy (1 MeV) ^{3}He beam, and an isochronous matching section to manipulate the transverse and maintain the longitudinal profile of the beam (without the use of an RF buncher) in the charge doubler transition section between RFQ's.

The idea of using ^{3}He for the production of radioisotopes for PET is not new. Development work on this concept was conducted by SAIC and UW in the early 1990's. However, the use of an RFQ with ^{3}He is a new approach and holds significant potential and research opportunities for advancing the state of the art in PET isotope generation.

2. System Description

Before the radiochemistry and targetry for ^{3}He could be investigated, an accelerator was needed that would supply a beam with the desired characteristics and parameters. A good starting point was the accelerator developed earlier by SAIC and UW, but upgrading was required. Analysis and a series of discussions resulted in the baseline operating parameters given in Table 1, based on the beam required as a function of energy for the target quantities of various PET isotopes (Table 2). The results of the redesign are shown in the layout; it makes the most efficient use of the existing equipment while solving some of the more challenging technical problems.

Ion Source and Charge Doubler

The approach taken is to use a singly-charged beam accelerated to an energy where it can be efficiently stripped (1 MeV). At this energy and a current of 400 μA_{avg} (20 mA_{peak}), carbon foil strippers could not survive the high power density, and a gas-jet stripper has been developed and tested with very promising results.

Medium Energy Beam Transport (MEBT)

The most difficult aspect of this accelerator system is the matching element between the prestripper and the poststripper RFQ's, which needs to accomplish several things: gas stripping, maintaining the longitudinal bunching of the beam, and transversely matching the beam into the second RFQ; tunable components are desired. It was decided to build an isochronous beam transport system that maintains the longitudinal and manipulates the transverse phase space of the beam. We will use use a 540-degree bending MEBT (Figure 1) which can be made isochronous; the beam optics are shown in Figure 2.

Radio Frequency Quadrupole

The accelerator that had been developed earlier had been designed for a final energy of 8 MeV. In order to achieve the higher energy requirements of the new system, it was decided that the most direct approach would be to add a third RFQ (manufactured by SAIC) to the high energy section to go from 8 MeV to the final energy of 10.5 MeV. The three RFQ cavities are not resonantly coupled. In order to have each cavity synchronized to, and resonant at, the same frequency, the resonant frequency of each cavity is controlled through adjustment of the temperature of the cavity cooling water. Tests on this tuning system at full (2.5%) duty factor have been successful.

3. Status

In tests so far, the low and medium energy beams have been characterized (important for the transport design) and the charge doubler has been prototyped, characterized, and tested with beam. Some of the information gained in the 1 MeV tests are summarized below.

Ion Source

He^+ ions are obtained from a fairly standard duoplasmatron ion source, operating at 360 Hz with a pulse length of 70 μs. Several weeks of reliable and stable source operation have been obtained. A 25 mA beam is extracted at 20 kV from a ~1 cm plasma cup through a 0.8 cm grounded extraction electrode with an electron suppression electrode. Slightly after extraction the ~90% normalized beam emittance was measured to be 0.5 - 0.7 π mm mrad. One magnetic solenoid is used to focus the 20 KeV beam into the RFQ. At the entrance of the RFQ, 0.7 m beyond the source, 75% of the beam is within ~0.5 π mm mrad emittance (normalized).

Measured Emittance of the 1 MeV Beam

After the prestripper RFQ, at 1 MeV, the rms emittance with 5.5 - 7 mA has been measured to be 0.2 mm mrad (or ~34 π mm mrad unnormalized for 90% of the beam). Better matching and understanding of the RFQ transmission is needed. A maximum beam of 11 - 13 mA has been observed from the RFQ and appears to have similar characteristics. This was achieved with a larger solenoid in the 20 KeV transport line.

Charge Doubler Tests

In a prototype stripper cell based on a pulsed gas jet, the flow rate of the gas jet was sufficient to prevent excessive heating of the gas by the beam, and the injected gas was pumped out between beam pulses. A magnetic spectrometer was used to test operation of the gas jet. Stripping efficiency for several gases is shown in Figure 3 as a function of back pressure on the injector. The best performance, with argon gas, reached 80% stripping efficiency at a pressure of 25 psia. Pressure measured at the RFQ was 2.8×10^{-6} Torr for this operating point, at a repetition rate of 60 Hz. We expect to be able to operate at no less than 70% stripping efficiency at the design rate of 360 Hz by increasing pumping capacity. An operational version of the stripper cell is now in fabrication.

4. Schedule

The major magnets for the MEBT system have been fabricated and are being tested, with installation and commissioning of the system scheduled to take place in late 1996. The modifications to the accelerator system are scheduled to be completed and tested in late 1996. Once completed, the accelerator will be run at Fermilab for six to eight weeks in order to test shielding and do some initial targetry development. Following this run, the accelerator system, built in a modular fashion in order to facilitate moving will be disassembled and shipped to BRF. The move and commissioning is anticipated to take about eight weeks, after which the in-depth targetry and radiochemistry research will begin.

Table 1. Accelerator Design Parameters

	Energy (MeV)	I_e (μA) average	Rep. Rate (Hz)	PW (μsec)
Existing System	8	300	360	55
New System	10.5	200	360	70

Table 2. ^{3}He Current Required for PET RFQ

Radionuclide	mCi EOB in target	μA_e 8 MeV*	μA_e 9.5 MeV**	μA_e 10 MeV**
^{18}F	600	627	389	332
^{11}C (low SA)	1000	202	140	125
^{11}C (high SA)	440	298	195	163
^{13}N	100	266	168	104
^{15}O (low SA)	800	517	360	318
^{15}O (high SA)	200	899	559	460

* 1 MeV energy loss in target window
** 1.5 MeV energy loss in target window

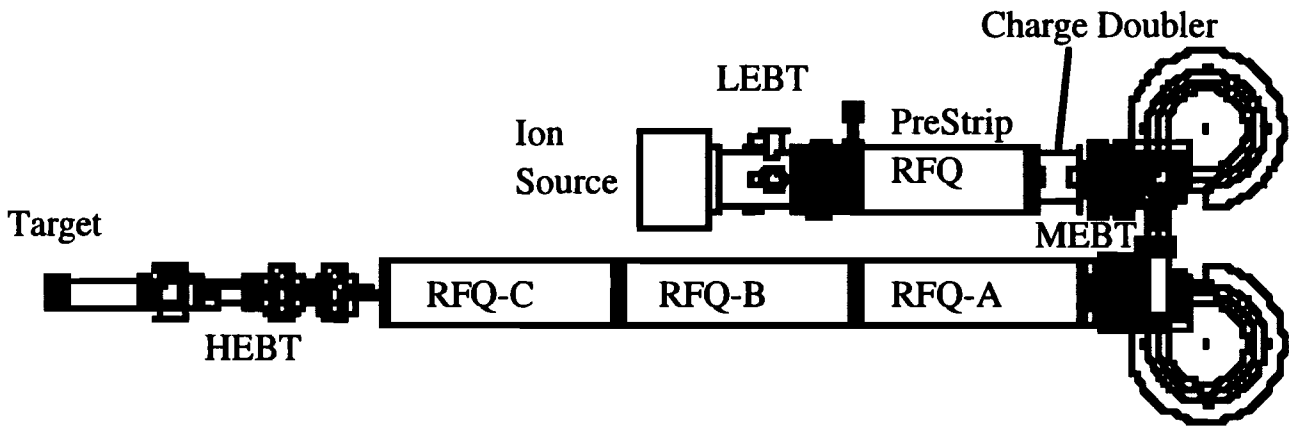

Layout of the BRF PET Accelerator

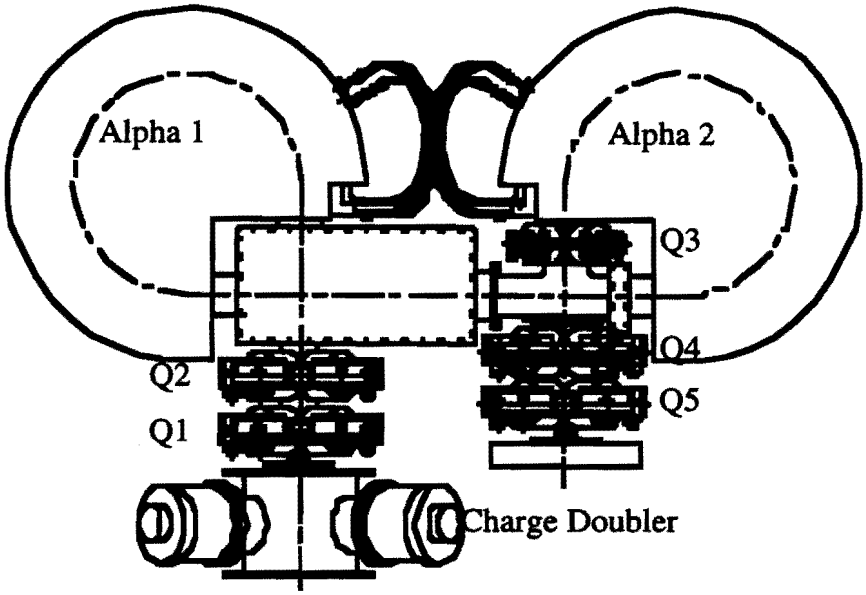

Figure 1. MEBT Mechanical Layout

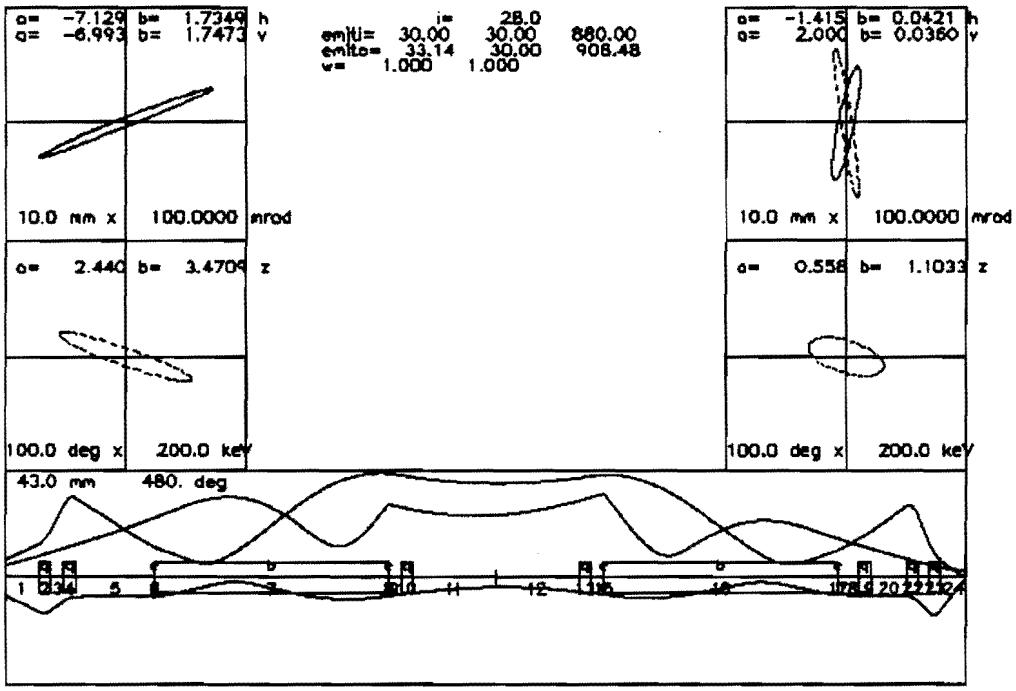

Figure 2. MEBT Optics

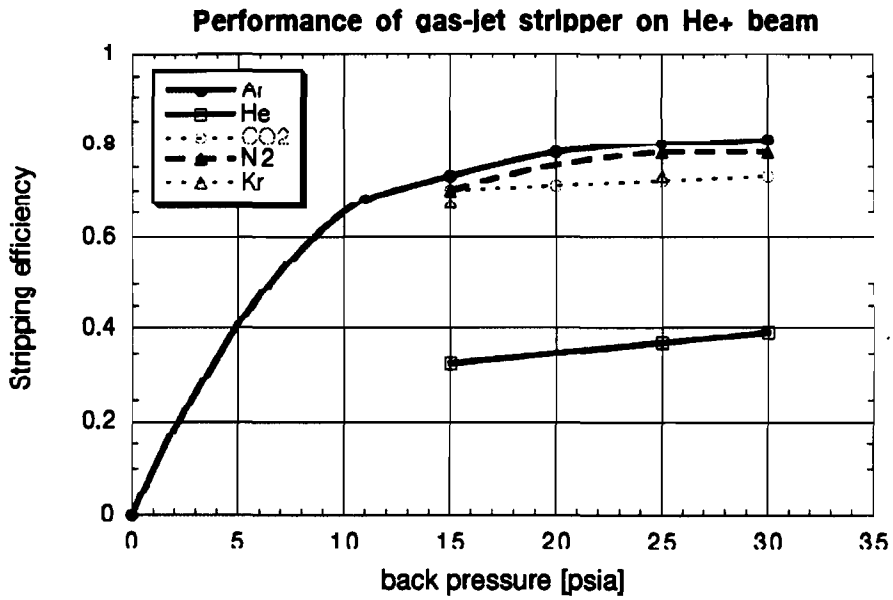

Figure 3. Performance of gas-jet stripper on He^+ beam

#	887
Title	A RFQ Linear Accelerator for PET Isotope Production
Short Title	PET Accelerator
Spokesperson(s)	Pasquinelli, R.
Status	Approved
Beamline	Other
Date Submitted	June 21, 1995
Date Approved	June 21, 1995

Fermilab Personnel

Ostiguy, F.
Pasquinelli, R.
Popovic, M.
Schmidt, C.
Webber, R.