864

September 1, 1992

Maximum Acceptance Detector for the Fermilab Collider (MAX)

Y. T. Gao, H. R. Gustafson, L. W. Jones, M. J. Longo*
University of Michigan

J. D. Bjorken*, G. Niemi, M. L. Perl
Stanford Linear Accelerator Center

P. Colestock, B. Hanna
Fermi National Accelerator Laboratory

J. Iwai
University of Washington

*Co-spokesmen—
BJORKEN@SLACVM, (415)926-2266
MICH::LONGO, (313)764-4445

SUMMARY

We propose a detector for the Collider which will cover the largest possible ranges of angles with electromagnetic calorimetry and charged tracking, and with hadronic calorimetry for the forward direction. The goal for the complete detector would be acceptance down to approx. 1 mrad, in contrast to CDF and D0, which have coverage only to approx. 40 mrad.

Because of the limitations of physical space and running time in all but B0 and D0, such a detector will have to be very compact and compatible with a variety of difficult boundary conditions. For this reason, we propose to run a test program at F0 during the second half of the present Collider running period, utilizing existing calorimeters and tracking systems. A less desirable option which can be installed at E0 is also described. With luck there may be the possibility of physics from the test program as well.

The final version of the detector would be installed at E0 after the Main Injector upgrade. The detector is designed to study processes with relatively large cross sections. The running time requirements are thus minimal and data taking would require running a small fraction of the time with the electrostatic separators turned off.

I. Introduction

At the first hadron collider, the CERN ISR, much of the early physics program was devoted to the far forward directions: two-body scattering, study of diffraction, and the study of leading particle spectra. The goal was the search for asymptopia, something the theorists of the day told the experimentalists would unlock the secrets of the strong interaction.

As it turned out, much of the exciting physics occurred at large angles and large p_t, and the ISR missed many of the greatest discoveries.

Nowadays the preponderance of theoretical and experimental activity concentrates on large angles and large p_t. It is possible that this attitude is as narrow as the early attitude toward asymptopia. In any case it is important that at least one experiment look with care and thoroughness at what goes on in the part of phase space neglected by all contemporary hadron collider detectors. This is especially urgent, given suggestions from theory that important new phenomena are likely to occur at high energies in the forward directions, and hints from cosmic ray data that in fact novel phenomena are being observed already.

Such a program (the FAD) has been promoted for the SSC by some of us.[1] In studying the physics menu, it is clear that not all of the FAD topics require the SSC energy scale, and it therefore is appropriate to try to do something in the interim. Fermilab is in principle an attractive option, but there is the difficulty of finding an acceptable experimental location.

We propose to build a transversely compact detector which could cover production angles down to approx. 1 mrad with electromagnetic calorimetry, some charged particle tracking, and with forward hadron calorimetry. The ultimate detector would be located in the E0 straight section, and would run with electrostatic separators turned off, at nominal beta for short runs only. Even at a nominal luminosity of 1×10^{28} $cm^{-2}\,sec^{-1}$, over 10^7 minimum bias events could be logged per day, quite enough to achieve the physics goals we perceive at present in a relatively short run.

It is clear that even in the Main Injector era the E0 environment is far from ideal for this purpose, and it therefore is important to learn as soon as possible the problems such a detector would face by means of *in situ* tests. It appears that prior to the Main Injector upgrade, F0 may be a better location for a test program. Therefore this document is mainly devoted to proposing such a program there. We believe that neither we nor the Laboratory should or need commit to the longer range program at this time. On the other hand we believe it important to put forward what we see

(optimistically) as the possible longer-range scientific benefits which might emerge from support of such an initiative.

We would like to initiate the test program in F0 (or E0) during the second half of the present collider running period, with installation of apparatus in the spring of 1993. Therefore there is no time to lose.

II. Physics

We propose to build a detector with calorimetry down to angles ~0.1°. In effect this detector would be the logical complement of CDF and D0. This detector would open up a wide range of physics not now addressed by existing detectors. The physics menu for this program divides itself into two portions—that which might be accessible in the early test program at F0, and that which appears to require the larger acceptance possible at E0 after the Main Injector upgrade. For the early program, we identify the following topics which we discuss in turn:

1. Rapidity gaps and jets in strong interactions.
2. Disoriented chiral condensate and exotic cosmic ray phenomena.
3. Search for enhanced heavy flavor production in the far forward direction.

1. Rapidity gaps and jets in strong interactions

Hard diffraction dissociation is a process where each projectile dissociates into a massive final state, where a large amount of transverse momentum (>>1 GeV) is exchanged between the projectiles, and where a rapidity gap exists in the final-state phase space. It has not yet been discovered experimentally. In the context of perturbative QCD, the process no doubt exists at some level, mediated by the exchange of a pair of gluons in a net color-singlet configuration. It is probable that the final state will have the structure of a typical coplanar two-jet event, but where the multiplicity of particles which have rapidities between those of the two jets (excluding a boundary region of order $\Delta\eta \approx 0.7$) is almost zero, as illustrated in Figure 1a.

Assuming this to be the case, a simple prediction[2] has been made for the frequency of hard diffraction, namely that it is of order 0.3% of the two-jet rate, roughly independent of the p_t of the jets, and roughly independent of the separation in rapidity of the jet cores (width of the gap).

This prediction allows a simple experimental search strategy which does not require absolute normalizations of jet p_t or jet production cross-section: no matter what the algorithm for isolating the jet sample, the fraction of the sample which shows the rapidity gap between the purported jets should roughly be the same, e.g., about 0.3%.

A MAX detector which can find jet cores *via* electromagnetic calorimetry alone, and which can count charged tracks and photons in the phase-space between the jets can therefore test this idea. Even a dijet-finding efficiency of 20–50% is quite adequate to study this problem.

Of course in principle CDF and D0 can do the same thing within their acceptance (presently $|\eta| < 4$). Indeed it is hoped that those collaborations will pay attention to this physics and contribute to the first observations of hard diffraction. The unique MAX contribution is the ability to extend this class of observations to the forward rapidity region ($|\eta| < 6$), as discussed in the next section.

Another application is the study of the structure function of the perturbative Pomeron as suggested by Ingelman and Schlein[3], and pioneered in the experiments led by Schlein at the SPS. While a serious experiment needs good hadron calorimetry and careful normalizations, again one may test whether the above idea of gap probability applies to the Ingelman-Schlein process. Here one looks for the fraction of two-jet events which show a rapidity gap aside, not between the two jets. Again the simple prediction above is that the fraction is of order 0.3%, independent of the production angles and p_t's of the two Ingelman-Schlein jets and the gap width. (See Figure 1b.)

It is important to note that the experimental elucidation of hard diffraction phenomena has important "engineering" implications for new physics searches, in particular Higgs-boson searches, at high energies. Understanding of such strong interaction processes may lead to an important new tool for discovery physics in the future.[2]

Finally, the total double diffraction cross section $d\sigma/d\eta_1 d\eta_2$ or $m_1 m_2 d\sigma/dm_1 dm_2$ has not been measured. Is factorization valid for this process? Again tracking plus simple, coarse-grained electromagnetic calorimetry should suffice for measuring this process reasonably well. This process is a significant fraction of the total cross section and again has important implications for our understanding of proton structure.

2. Disoriented chiral condensate and exotic cosmic ray phenomena

The Chacaltaya-Pamir and JACEE collaborations have persistently reported that unusual events are seen in emulsion chambers which have anomalously large (or small) charged/neutral particle ratios[4]. We do not attempt a general review here, but do exhibit an event from the JACEE group[4b], which shows some possible anomalies which are also claimed in qualitative terms by Chacaltaya-Pamir. The event (Fig. 2), which is initiated by a singly-charged primary and for which the collision occurs within the (balloon-borne) emulsion chamber, is characterized by a visible electromagnetic

energy of about 15 TeV. Almost all the leading particles are γ's. When examined the γ's appear to cluster into two groups. The leading cluster, indicated by the circle, consists of about 32 γ's with $<p_t> \approx 200$ MeV/c and only one accompanying charged particle. A possibly distinct cluster has three times as many γ's as charged hadrons (about 54 γ's *vs.* about 17 charged).

The pseudorapidity interval in which these clusters are found is between 6 and 9. Assuming that the primary energy is about 20 TeV, this means that if such a leading particle system were created in collider mode by a 1 TeV primary, then the rapidities of these products would be reduced by an amount log (20) = 3. Thus the rapidity interval of 3 to 6 would be appropriate for the Tevatron collider.

Individual events of the Chacaltaya-Pamir group also show a tendency toward fractionation of charged and neutral multiplicity in the phase space, with "Chiron" behavior not uncommon.[4a] By this we mean the observation of clusters of secondaries with not small total p_t but where the individual members of the cluster have small p_t (30–100 MeV/c).

Even in accelerator experiments on hadron-hadron collisions the examination of correlation moments used for intermittency studies indicates that there is a surprising amount of multiparticle correlation of low mass groups of like-sign secondaries that is not found in random-charge groups. This correlation seems to go beyond what can be expected from a simple application of Bose-Einstein statistics to a source of fixed size.[5]

A theoretical line which points in the same direction is that of disoriented chiral condensate.[6] The basic idea is that in a high energy collision a "fireball" of large surface energy density is created which expands outward from the collision point at the speed of light, the interior of which is relatively "cold". This interior region has a chiral orientation (in the sense of the sigma model of strong chiral symmetry breaking) which is not the same as in the real vacuum outside. This situation persists until the energy density in the outgoing shell diminishes enough for the outside vacuum to penetrate inward and reorient the interior region. The difference of the two vacuum condensates is radiated away; it consists of a semiclassical pion field with a given value of (cartesian) isospin. The amount of such semiclassical coherent pion radiation depends on the volume of the interior region, while the number of conventional hadron secondaries depends on the surface area of the fireball. Furthermore, the mean transverse momentum of the coherent radiation can be expected to be small because it is radiated from a large, quasi-macroscopic region of diameter of several (5–10) fm.

Event-by-event the coherent component may be all neutral or all charged. If the chiral disorientation is random in isospin space, then the distribution of the neutral fraction $f \equiv \pi^0/(\pi^0 + \pi^+ + \pi^-)$ of the coherent component goes as $1/\sqrt{f}$, i. e., very broad and essentially independent of multiplicity. Nevertheless it takes a careful experiment to establish its existence, and the existing Centauro searches are manifestly inadequate to test this particular idea. In particular, the debris from the fireball surface does not exhibit this behavior, and in general must be removed by a cut (from above) in the transverse momenta of the secondaries to be examined.

It is arguable that in the far forward direction the contribution of the surface debris is small due to overall energy-momentum conservation, while the anomalous condensate, which carries relatively little energy-momentum per particle, is less suppressed. This argument, if defensible in detail, could help explain why the cosmic ray experiments apparently see the effect relatively cleanly.

Much work is needed on the theory behind this general idea. But no matter how much theory is produced, experiment will be essential to guide the interpretations. What is necessary to measure is the charged and neutral pion distributions simultaneously event-by-event, with special attention to the low-p_t component. For the π^0 photons the difficulty of low p_t is mitigated by going to the forward direction, where the photon laboratory momenta become appreciable even at low p_t. For the charged particles it is only necessary to have sufficient energy and angular resolution to distinguish p_t below 200-300 MeV from those above.

As for the importance of this question we emphasize that, if successful, this program attacks the problem of the structure of the strong interaction vacuum; it might even lead to spinoff on the structure of the electroweak vacuum if the technicolor option is chosen by nature.

3. Enhanced heavy-flavor production in the forward direction

Perturbative QCD, applied to very high energy quark-quark (or quark-gluon, gluon-gluon) interactions at fixed impact parameter or transverse momentum scale, appears to break down: quark-quark interactions become strong in the limit $s \to \infty$ and are subject to nonperturbative absorption corrections. This happens even at short distances, and is related to multiple gluon radiation as described by the BFKL evolution equation[7]. The enhancement over naive low-order estimates can be orders of magnitude at cms subenergies in the multi-TeV range and p_t scales of 10–30 GeV. Mueller and Navelet have noted that because of the short-distance nature of this phenomenon there is no suppression of heavy flavors relative to light in this regime, and therefore the production of c and b quarks might likewise be enhanced by large factors over the naive estimations based on low order calculations.[8]

If this is the case there may be reason for exploratory searches for anomalously large amounts of charm or even bottom production in the forward region at Tevatron energies. We note that there are again in cosmic ray experiments claims of very large forward charm production (the "long-flying component").[9]

A silicon microvertex tracking system for MAX might therefore be able to contribute to this question, even in the absence of sophisticated magnetic analysis or particle identification, in just setting rough limits on (or measurements of) the forward heavy-flavor yield.

In addition to these physics goals which might be attacked in the test program at F0, there are additional goals which the greater acceptance available eventually at E0 would allow to be carried out. These include the following:

4. Study of Mueller-Navelet jet pairs as a test of the blackening of partons at high energy.
5. Study of leading nucleon spectra–the cosmic ray connection.
6. Tests of limiting fragmentation–the cosmic ray connection again.
7. Study of event structure when leading nucleons are present in the final state.

Of course the previous topics will also benefit by the greater acceptance–and presumably sophistication–of the complete E0 experiment. We now turn to the remaining topics in more detail:

4. Quark-quark interactions at small fixed distances get strong at high energies: Mueller-Navelet jets.

The physics described in item 3 leads to a pair of experiments suggested by Mueller and Navelet.[8] They ask to measure dijet final states when the rapidity separation is as large as possible. Because of the aforementioned BFKL enhancements[7], they expect a large enhancement over naive low-order estimations. At the Tevatron, one wishes to measure jet pairs with longitudinal momenta of 300–600 GeV (in opposite directions along the beam axis) and with p_t of 5–10 GeV. This appears to require hadron calorimetry and longitudinal free space ~10 meters in each direction from the collision point. The cross section, even without enhancement, is more than adequate to be measured well in a high statistics minimum bias run. According to Mueller and Navelet, the enhancement factor could be as high as 100 relative to a single-gluon exchange estimate.

The two measurements are first the inclusive two-jet cross section, and second the highly coplanar two-jet cross section. The first, the analog of the total cross section, sums over emission of extra gluons in the rapidity interval between the jets and leads to very little azimuthal correlation between the original leading jets. The

second, the analog of elastic scattering, is the "shadow" of the first and leads to coplanarity and no extra jets in the event.

5. Leading nucleon spectra

The fate of the valence quanta in collider collisions has never been well studied. Not only is this of fundamental interest in its own right, but it also is of great importance for the cosmic-ray community, which needs it as input to simulations of air showers. A fundamental parameter in such studies is the fraction of primary energy carried forward by the leading secondary, usually a neutron or proton. This question bears on the issue of primary composition of cosmic rays and ultimately on the question of their origin, a matter as yet unsolved.

To see nucleons at x_f of 0.1–0.9 and nominal p_t hadron calorimetry sensitive to milliradian production angles is required; hence the larger lever arms of the ultimate E0 experiment.

6. Tests of limiting fragmentation

Complementary to the previous measurement is the observation of the remaining energy produced in the event. Simulations of cosmic-ray phenomena which are based on straightforward extrapolations upward from lower energy fail badly. Not even the perturbative QCD scale-violating effects suffice to explain the data. Observation of the leading pion spectra and the general leading-fragment event structure would again be of great use for the cosmic ray community–Is it possible to scale up from the lower energies? Comparison of leading-particle rapidity distributions in beam-gas and beam-beam interactions directly provides information on energy dependences which is relatively insensitive to detector efficiencies and biases.

7. Event structures associated with leading nucleons

In events with leading nucleons observed, it can be argued that at most one quark from each beam interacted. This is a simple subset of the total event sample and, as emphasized by Strikman[10], it is therefore of interest to see whether there is a distinction in the nature of the global event structure, e.g., multiplicity, correlation structure, jet production, etc. If these events are indeed simpler in their structure, they may be a cleaner subsample (with respect to their underlying event structure) to be used in new physics searches.

III. Experimental Apparatus

A collider detector with coverage at very small angles is, of necessity, intimately connected to the Collider ring. There is also the likelihood that the experiment will have to learn to cope with different background problems than those faced by CDF and D0. The installation of the detector should therefore be staged to allow experience to be gained on these issues. We propose that the installation proceed in two phases.

The Phase I detector would be installed during the shutdown in mid-1993 so that some running can take place during the present Collider run. The complete detector would be installed in the E0 straight section at the commissioning of the Main Injector which will allow the injector magnets now there to be removed.

The basic constraint on the Phase I detector is created by the physical environment. The only practical locations for a pre-Main Injector detector appear to be the E0 and F0 straight sections. The F0 straight section has enough longitudinal space in the $\bar{p}$ hemisphere for a detector which would cover angles down to a ~10 mrad. However the transverse dimensions of the detector are severely limited by the proximity of the Main Ring rf cavities, their supports, and the floor. A cross section showing the available transverse space is shown in Fig. 3. Some of the existing beam pipe through the straight section is 3" outer diameter, so we use this diameter as a basis for the design.

A possible detector arrangement which could be installed in this space is shown in Figure 4, though the actual arrangement may differ considerably depending on availability of apparatus and time constraints. This design gives em calorimetry over the range from 10 mrad in the $\bar{p}$ hemisphere (η=—5.3) to about η = 4.6 in the proton hemisphere. All except the central barrel would also have hadronic sections. The entire range would be instrumented with tracking, though only crude tracking is sufficient for most of the goals of Phase I . The em calorimeter in the central region need only have modest energy resolution.

The physics function of these calorimeters is, for physics item 1, to find jets and for physics item 2 to find individual photons and estimate their energies to a nominal accuracy of say 20%.

The most demanding requirement for these calorimeter elements is the finding of the large number of photons present in the JACEE example. The separation in η and ϕ of the photons in the cluster is of order 0.1, and therefore ideally one wants pixel sizes no larger than that, say 0.1 x 0.1. This turns into physical pixels of typical size 1 cm x 1 cm. The number of pixels per annular wall would be of order 300. In the region of η from 3 to 6, the typical energies of these photons range from 1 to 20 GeV, so the energy resolution required can be achieved with relatively crude calorimetry.

All three physics goals identified for Stage I require detection of charged tracks. For physics item 1, this tracking is needed only to find rapidity gaps, i.e., to detect the absence of charged particles. However for physics item 2, one would not only want to count the charged tracks differentially in η and ϕ, but also identify low p_t secondaries to see whether there existed a component associated with disoriented chiral condensate. [By low p_t is meant a nominal value of 100 MeV.]

The third physics item requires a microvertex system, and this would be an ideal choice in general. The tracking requirements for physics item 2 would be easily met, and even if background sources turn out to be bad, the channel occupancies would probably still remain sufficiently low for successful pattern recognition. And there would be great benefits for future b-physics initiatives to see how a forward microvertex tracking system operates in this environment, and whether there are an enhanced number of heavy-flavor hadrons to observe!

Some scintillator planes should be placed beyond/between the Tevatron RF tanks to detect secondaries from real collisions, and help to provide, via timing information, evidence for beam-beam collisions and rejection of the beam-gas collisions.

The F0 straight section would allow a detector with $\approx$11 m of space along the beam and is our first preference for Phase I. It has the disadvantage of severe constraints on space transverse to the beams due to the MR rf cavities and their stands. An alternative to that would be E0. A possible detector that could be installed there is shown in Fig. 5. At E0 the space directly above the Doubler vacuum pipe is used for proton and antiproton injection from the Main Ring. Thus the calorimeters are placed to the side of the vacuum pipe and cover a relatively small range in ϕ and η. This is sufficient to look for an enhancement in the rate of two-jet events at angles ~10 mrad.

Phase II

A possible design for the complete detector is shown in Figure 6. This would be installed in E0 after the removal of the beam pipes which now used to inject into the Doubler from the Main Ring. The detector and associated vacuum pipes would replace much of the Doubler vacuum pipe in the E0 straight section.

A notable feature of this design is the capability of moving the outermost calorimeters horizontally so that the smallest possible angles can be covered. This movement is accomplished by splitting the calorimeter into two "halves", CAL 3A and CAL 3B. Flexible metal bellows are used between the sections of vacuum pipe on which these calorimeters are mounted, and the rest of the vacuum pipe. These bellows are standard metal bellows which allow enough transverse motion to move the

calorimeters from their withdrawn positions to a position <2 cm from the beams when the beam is stable and the calorimeters are actually in use. Mechanical stops and other safety features would have to be incorporated into the design to prevent the possibility that the calorimeters would intercept a significant fraction of the beam.

As already emphasized, the final Phase II design will be strongly influenced by the experience gained in Phase I. The scenario in Fig. 6 is meant to illustrate that a design which can accomplish our physics goals is possible.

IV. Background and Triggering Considerations

A matter of considerable concern is whether the background environment in F0 will be tolerable. An immediate problem may be the presence of too much rf from the cavities all around, interfering with the data acquisition electronics. However, beam diagnostic equipment, some of which works with very low-level signals, now operates happily in that area. Another is the danger of accidental beam losses from either the Main Ring or Tevatron damaging nearby detection elements. However this latter problem seems not qualitatively different from problems already faced by CDF, D0, C0, and E0 experiments.

However, doing tracking and/or quality calorimetry in the forward direction with so many background sources upstream may be considered a novel problem, and concerns regarding this question has inhibited the initiation of similar initiatives in the past. These questions also are vital for the SSC FAD initiative, and we here summarize some thoughts regarding the seriousness of this problem:

1. When the collider is running well, beam halo is necessarily small, because the beam lifetime alone calibrates the rate of loss of beam. This is a qualitatively different situation from fixed-target running and e^+e^- colliders. Working experience with forward detector elements in hadron colliders corroborates this conclusion.

2. Beam-gas collisions can be a problem in a detector with acceptance down to small angles. At the Fermilab Collider these occur at a rate $\approx$1 kHz/m.[11] However even at low luminosity, simple trigger algorithms based on timing information allow rejections of 10^3 or so.[12]

A troublesome background problem will be extra photons detected in the calorimeter which did not originate at the collision point, and for which triangulation is not adequate to determine their true point of origin. This will be a serious problem for physics item 2.

Another concern is the background of charged particles in the downstream tracking chamber due to leakage from interactions in the calorimeters farther upstream. We have made estimates of this background, based on measurements with a calorimeter in the M5 test beam. These show that on average only one in 5 beam-

beam events will have <u>any</u> background tracks due to this source. Details of this will be made available separately.

It is expected that a very simple trigger will be sufficient in the early phases of the experiment, until enough experience is gained to devise a more selective trigger that will not throw out new physics with the minimum bias events. The initial problem of triggering the detector is mainly that of rejection of beam-gas triggers by timing. Assuming that the beam lifetime is 100 hrs and that all losses occur in the six long straight sections, we find a possible rate of 10 kHz, while with a nominal luminosity of 1×10^{28} at F0, we have a true beam-beam collision rate of about 500 Hz. Therefore an online rejection of a factor ~100 is needed. As mentioned above, the experience at C0 argues that this will not be difficult.

V. Running Time Considerations

The running time and luminosity requirements are modest. With a nominal $\beta^* \approx$ 70 m at F0, the luminosity there is ≈1% that at B0[11]. With six-bunch running, we can expect a luminosity $\sim 10^{28}$ $cm^{-2}s^{-1}$ and a good event rate <500 Hz, even with a minimum bias trigger. This leads in principle to the acquisition of over 10^7 events/day. The goal of the data acquisition system will be to log 10^3 events/sec, which should be possible since the event size is small. Obviously the electrostatic separators would have to be turned off to allow collisions to occur at F0 or E0. Almost all tuning and some data taking can take place with beam-gas collisions when the separators are on.

The most convenient arrangement might be to take data for one or two hours at the beginning or end of every fill.

VI. Costs

Costs for Phase I can not be estimated at this time. Our expectation is that almost all of the apparatus will be recycled from other experiments, and therefore costs will be minimal.

VII. Requests of Fermilab (Phase I)

1. All vacuum chambers.
2. Relocation of instrumentation, vacuum pumps, valves, and ports between approx. –10 and +1 meters from F0 [to be worked out in detailed discussions].
2. PREP electronics
3. Computer for data acquisition

REFERENCES

1. J. D. Bjorken , A Full Acceptance Detector for SSC Physics at Low and Intermediate Mass Scales: An Expression of Interest to the SSC, SLAC-PUB-5545, May 1991, [Int. J. Mod. Phys. A7, 4189 (1992)].
2 J. D. Bjorken, SLAC-PUB-5616, March 1992. Submitted to Phys. Rev. D
3. G. Ingelman and P. Schlein , Phys. Lett. 152B, 256 (1985).
4 (a) L. Baradzei *et al.*(Chacaltaya-Pamir Coll.), Nucl. Phys B370, 365 (1992).
(b) J. J. Lord and J. Iwai, Univ. of Washington preprint (paper 515 submitted to the Int'l. Conf. on High Energy Physics, Dallas, TX, August 1992) ,
J. Iwai (JACEE Collaboration), UWSEA 92-06.
5. A. Bialas, Acta Phys. Polon. B23, 561 (1992) and references therein.
W. Kittel, NA22, private communication.
6. J. D. Bjorken, SLAC-PUB-5794, Acta Phys. Polon. B23, 637,1992.
C. Taylor and K. Kowalski (private communication)
7. E. Kuraev, L. Lipatov, and V. Fadin, Sov. Phys. JETP 45, 199 (1977).
Y. Balitsky and L. Lipatov, Sov. J. Nucl. Phys. 28, 822 (1978).
8. A. H. Mueller and H. Navelet , Nucl. Phys. B282, 727 (1987).
9. I. M. Dremin and V. I. Yakovlev, in Seewinkel Proceedings, Multiparticle Dynamics 1986, p. 849.
M. Dremin and V. I. Yakovlev, in J. Bellandi and A. Pemmaraju, (Eds.): Topics On Cosmic Rays, Vol. 1, p. 122 (1987).
10. M. Strikman, private communication.
11. B. Hanna, private communication.
12. Private communication from E735

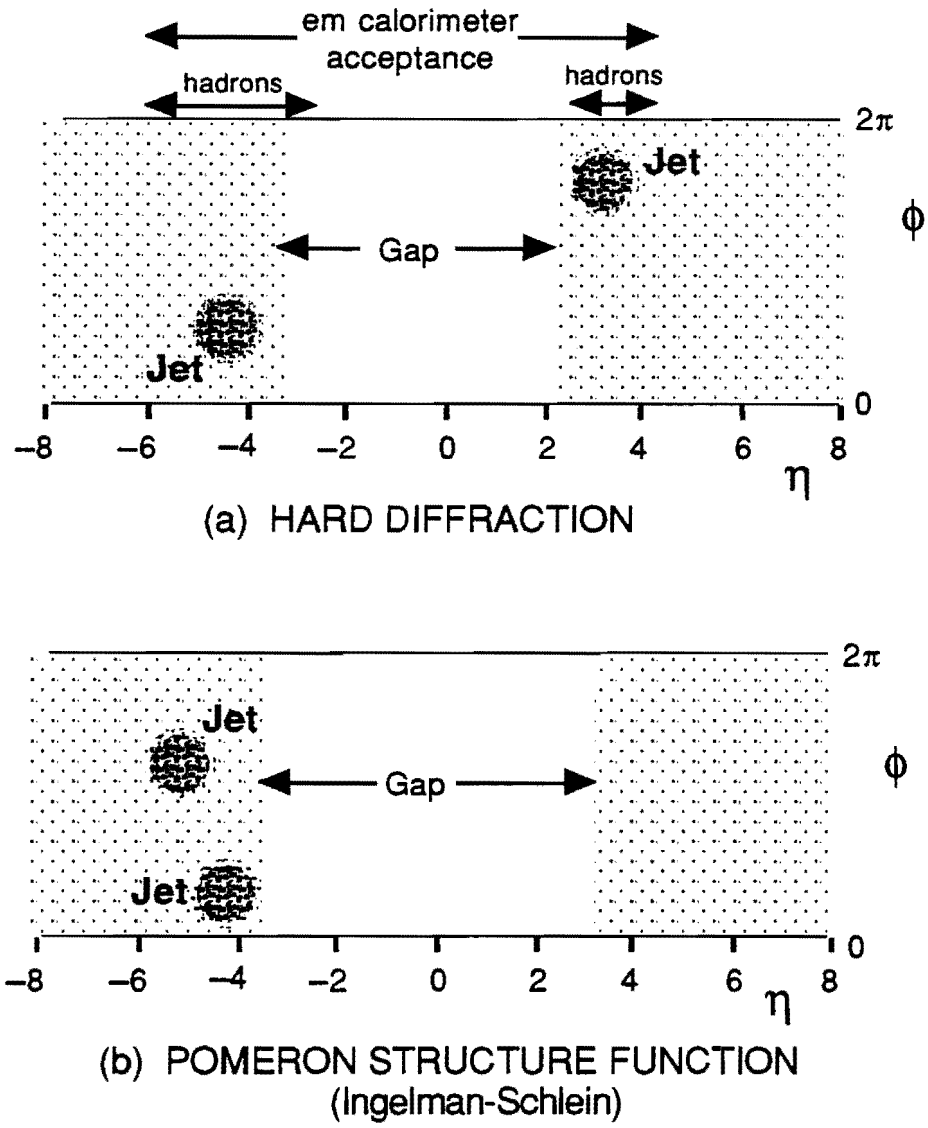

Figure 1—

(a) Hard diffraction dissociation process in which each projectile dissociates into a massive final state, a large amount of transverse momentum is exchanged between the projectiles, and a rapidity gap exists in the final-state phase space. The shaded regions correspond to secondary particle production with normal density. The calorimeter acceptance shown is that for the sample F0 detector illustrated in Fig. 4.

(b) Two-jet event due to the process suggested by Ingelman and Schlein which shows a rapidity gap aside, not between the two jets.

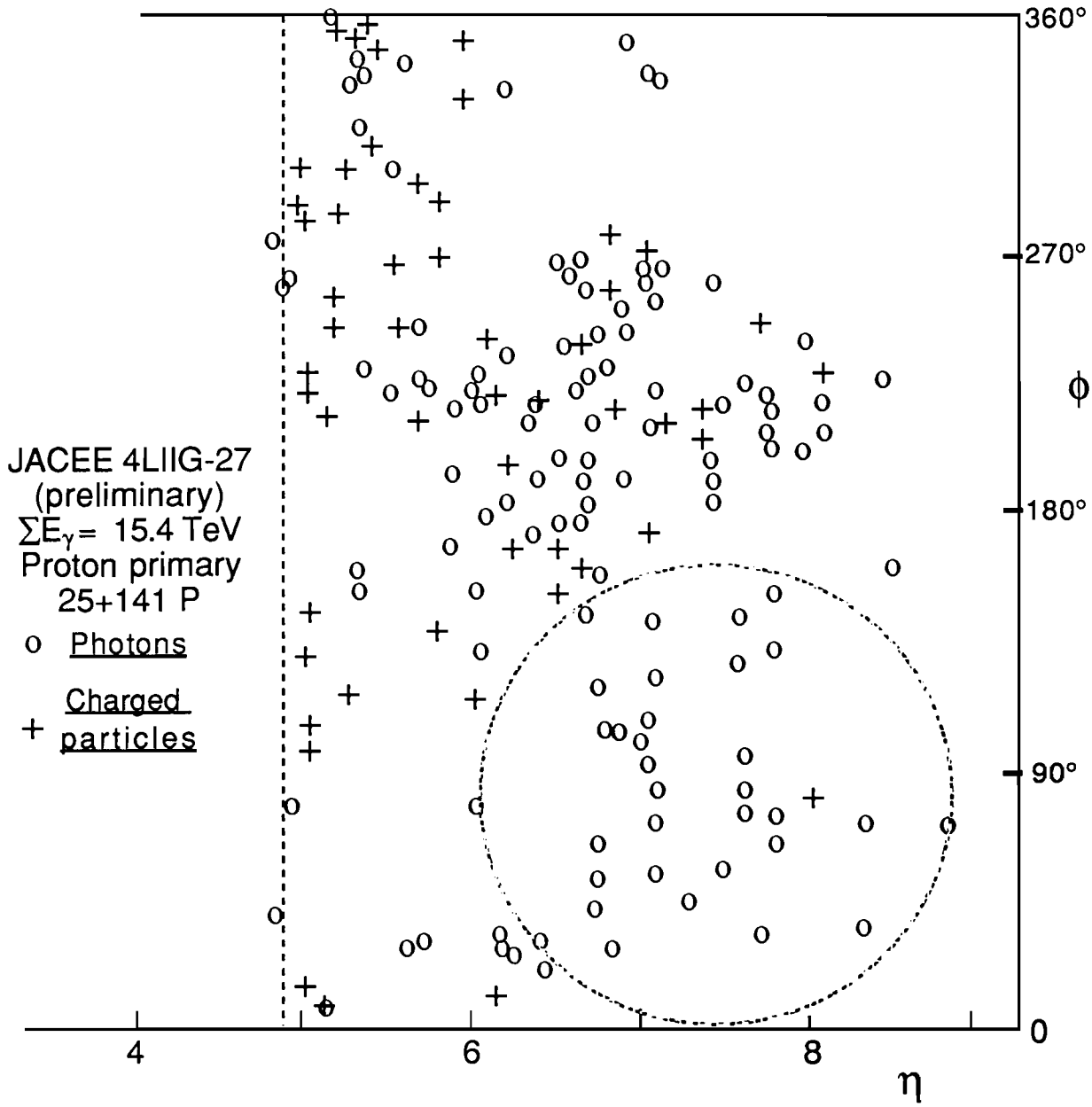

Figure 2—JACEE event showing the leading particle region $\eta > 6.5$. At lower rapidities the photon detection efficiency becomes small. The leading cluster, indicated by the circle, consists of about 32 γ's with only one accompanying charged particle.

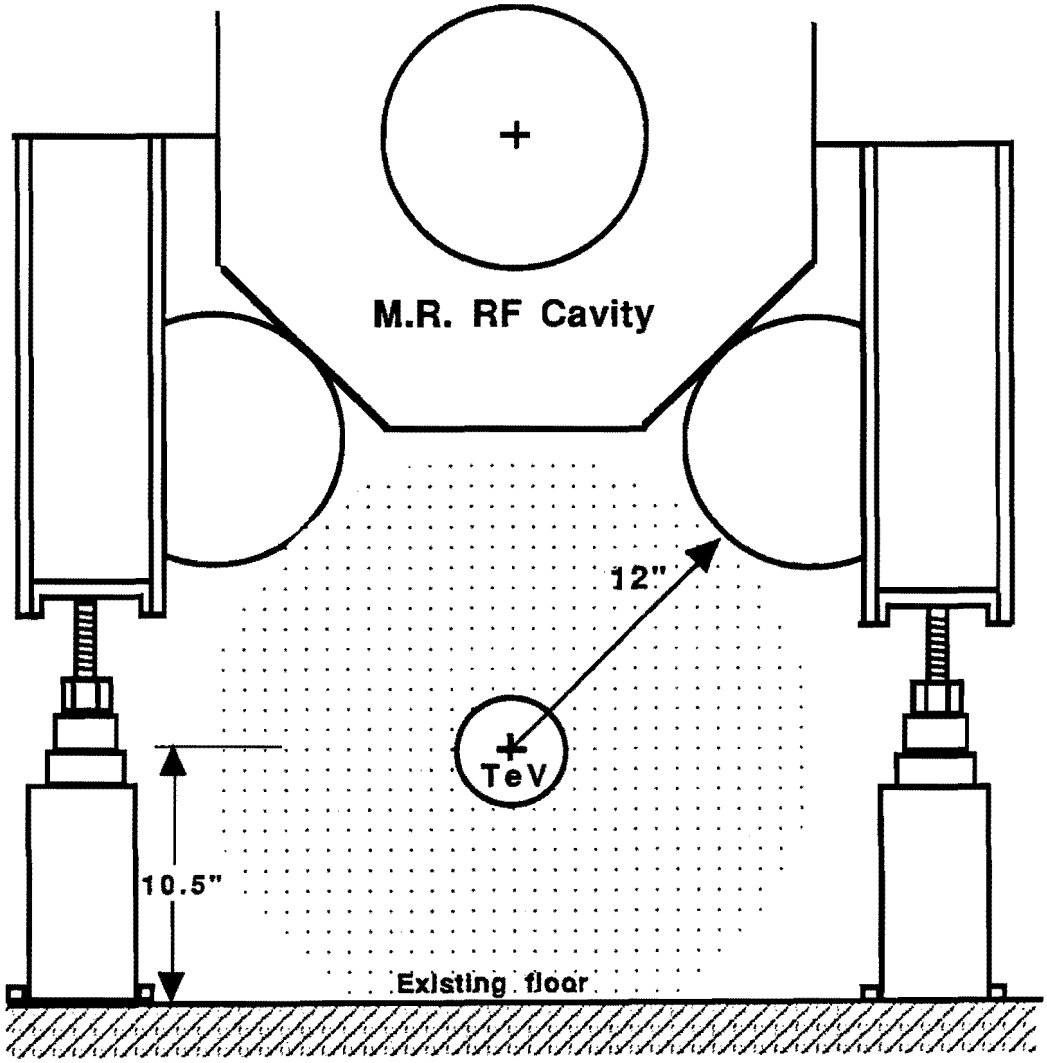

Cross Section at F0

Figure 3—Typical cross section through F0. The dotted region shows the clearance available around the Doubler beam pipe.

F0 Phase I Detector, top view

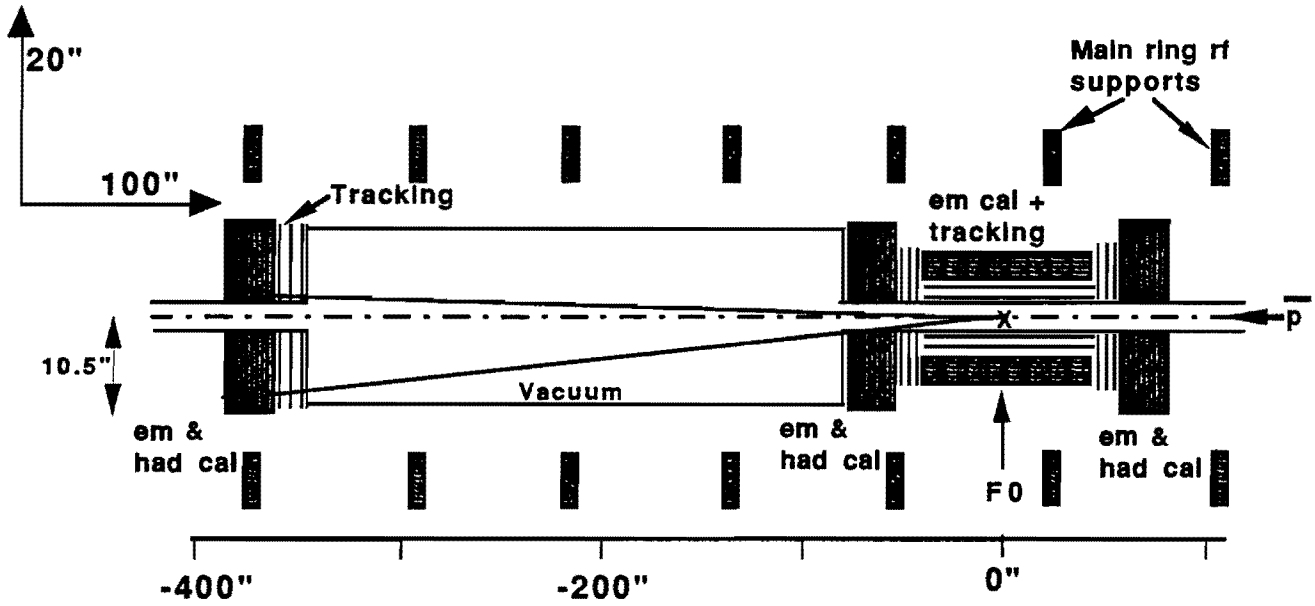

Figure 4—Possible detector arrangement for the F0 straight section. Note that transverse dimensions are greatly exaggerated.

E0 Phase I detector, top view

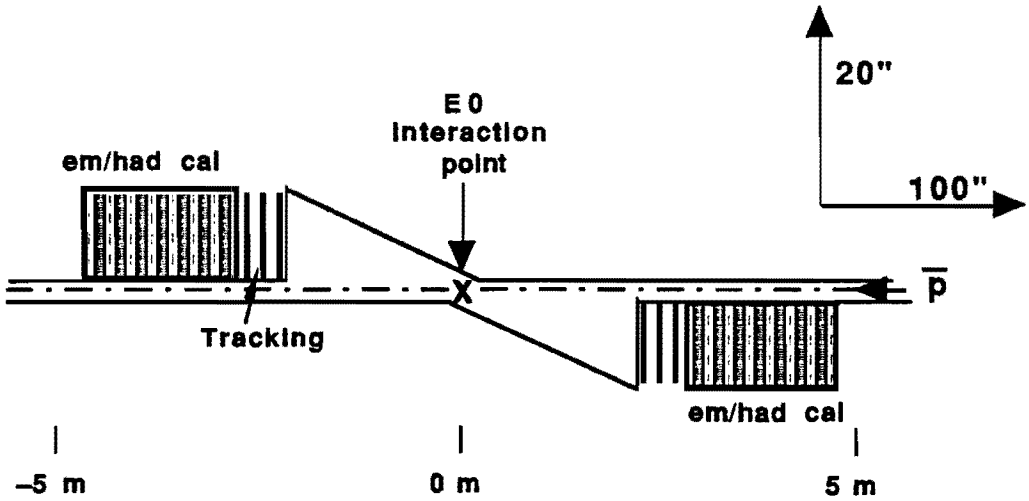

Figure 5—Possible detector arrangement for the E0 straight section. Note that transverse dimensions are greatly exaggerated.

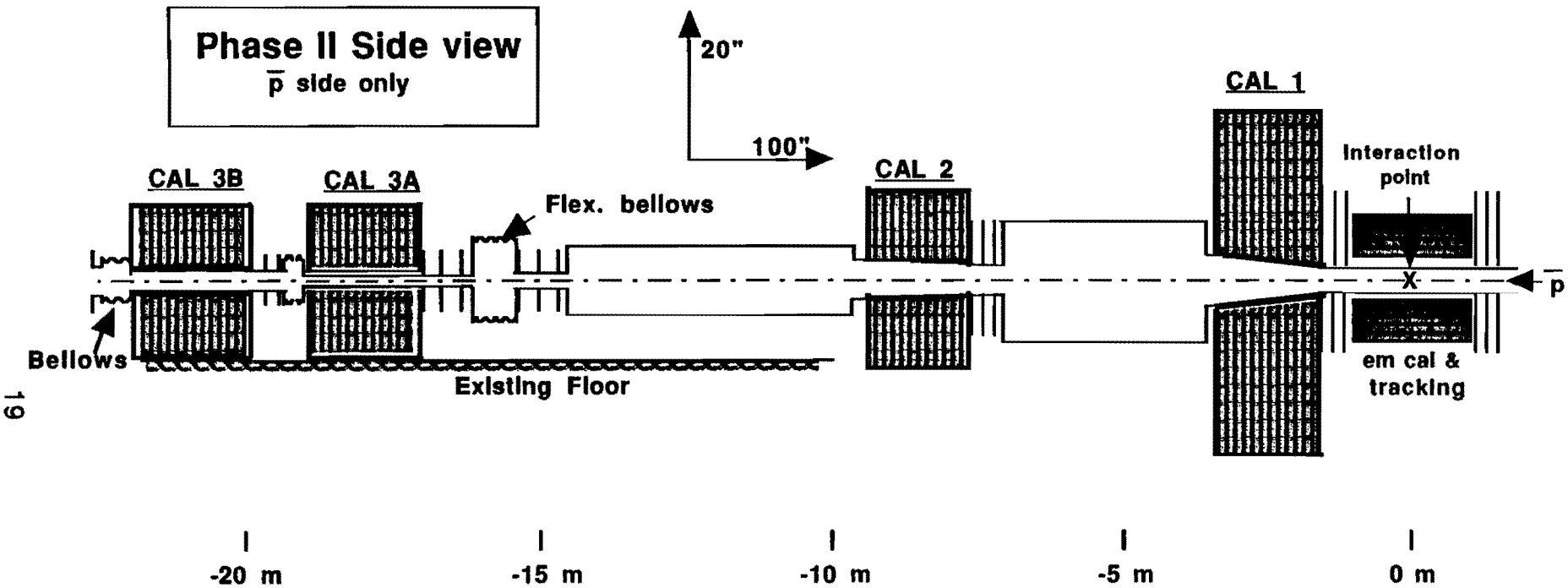

Figure 6—Possible scheme for Phase II. Only the $\overline{p}$ side is shown. The detector would be symmetric about E0.