FERMILAB-PROPOSAL-0810 810

Letter of intent for a precise and accurate measurement of nucleon structure functions (inelastic form factors) using the E665 apparatus.

by

a subset of the E665 collaboration, joined by other physicists.

Presented to FERMILAB March 5, 1990

Richard Wilson

Abstract

It is proposed during the calender year 1993, to measure nucleon structure functions with high statistical accuracy and low systematic errors, using the muon beam from the Tevatron and the existing E665 apparatus with some modifications. This will give accurate values for $F_2{}^p$, $F_2{}^n$, for the difference $F_2{}^p$- $F_2{}^n$, and upper limits for the value of the ratio of longtitudinal to transverse electromagnetic interactions, R.

Introduction

There are a number of reasons why precise measurements of nucleon structure functions are desireable. The first is that these quantities are important input data to other measurenments such as estimating the cross sectioons for p-p collisions at SSC energies. They are important measurements in their own right and deserve accurate measurement just as the atomic constants, e,h, c and N are measured to a much higher degree of accuracy than they can presently be understood or used.

There are also a number of theoretical reasons for measurements of the structure functions factors. Already the first measurements of muon scattering at Fermilab, firstly E26 and soon thereafter E98, showed that the structure function $F_2(q^2,\nu)$ is not constant but varies with q^2. This was interpreted as evidence for QCD and the strong interaction coupling constant α_s and the scale violation parameter Λ were derived therefrom. Now further refinements are needed; theory suggests that α_s is not constant either, but "runs" with q^2. In this letter of intent we take as a criterion for the usefulness of an experiment the ability to demonstrate the running of α_s. However, we insist that this is only illustrative; the value of a precise measurement of structure functions does not depend upon this particular presentation.

There have been several discussions of the best way of measuring structure functions precisely in the next few years. In particular there has been a summer study in Breckenridge, CO, in summer 1989. We refer to many of the discussions in that summer study.

General principles.

This letter of intent addresses two important issues; systematic errors, and statistical uncertainty. In muon experiments at Fermilab (E98 and E398) the statistical uncertainty was dominant. At CERN, the beam intensity was higher, and there was more running time, and systematic errors were probably dominant. Here we anticipate that considerable attention must be paid to both. Since we want to obtain statistically precise data at the highest possible momentum transfers, where the cross section is low, we first address this question.

Since we do not intend to examine the hadrons from the muon interactions, we do not have to worry about hadron absorptions in the target. We can then use as thick a target as is technically feasible to increase the counting rate. Ideally, we would use a short target of high density. This can be done for some work, if we are willing to measure structure functions in nuclei rather than nucleons (as is done in neutrino experiments). However, we wish to measure the structure functions in hydrogen and are therefore limited by the density. We propose a hydrogen target 10 meters long.

We want to be able to detect and measure most of the scattered muons from

the target. A cut off at small angles (low q^2) is acceptable for the main part of the experiment. Ideally the acceptance should be 100% for scattered muons from all parts of the target, but if the interaction vertex is well measured, a reduced acceptance from a part of the target is permissible. This target will be in four sections, with a proportional chamber between each section to help to identify the section in which the scattering occurred.

This requirement of measuring all scattered muons at high momentum transfers is a constraint for any apparatus choice. How well it can be met varies; and the systematic errors introduced by not meeting it vary also.

During the 1989 summer study at Breckenridge, CO, two particular types of detector system were compared. One, an open, air core, toroidal magnet as proposed by Guyot et al for CERN, and another, the E665 apparatus, in the present geometry, but with a target upstream. In Figure 1 we show the E665 apparatus as it existed for the 1987/8 run. It was noted that the air core toroid had a 60% acceptance over almost the whole range, with a cutoff at low q^2, but that the E665 apparatus, has a 100% acceptance at medium q^2, but a rapid fall off at high q^2 due to geometrical constraints. The study group recommended use of the toroid. But that is expensive, and likely to be delayed; we here present, in addition to the E665 apparatus, two possible modifications that could improve the acceptance.

Aperture and acceptance.

A large part of the purpose of the proposed running is to obtain precise structure functions (form factors) over a large range in q^2 and ν. At high q^2, the scattering angle is large, and there will be a geometric limit determined primarily by the size of the counters, and the aperture in the magnets. In Figure 2 we illustrate this. Since the vertical position of a scattered muon can be measured to better than a millimeter in the magnet vertical aperture of 1 meter, it is anticipated that the reduction in aperture below 100% can be measured to 0.1%. However, the count rate will be the lowest at high momentum transfers, this experiment will begin to lose its' interest at those momentum transfers where the geometric aperture drops below 50%.

It is important to note that the aperture limit on momentum transfer varies with beam energy. Approximately ${q^2}_{max} = (E * \theta)^2$. Thus, the high energy of the muon beam available at FERMILAB compared with the energy available at CERN, enables a structure function experiment to be done at higher momentum transfers, (other parameters being equal) and the limit for a toroid experiment at CERN is no better than the limit for an unmodified E665 experiment at FERMILAB.

In Figure 3, from the Breckenridge study, we show a possible modification of the E665 apparatus. Figure 4 shows the focussing arrangement. As noted in the next section, we are optimistic that we can successfully modify the E665 magnet arrangement to get a higher aperture.

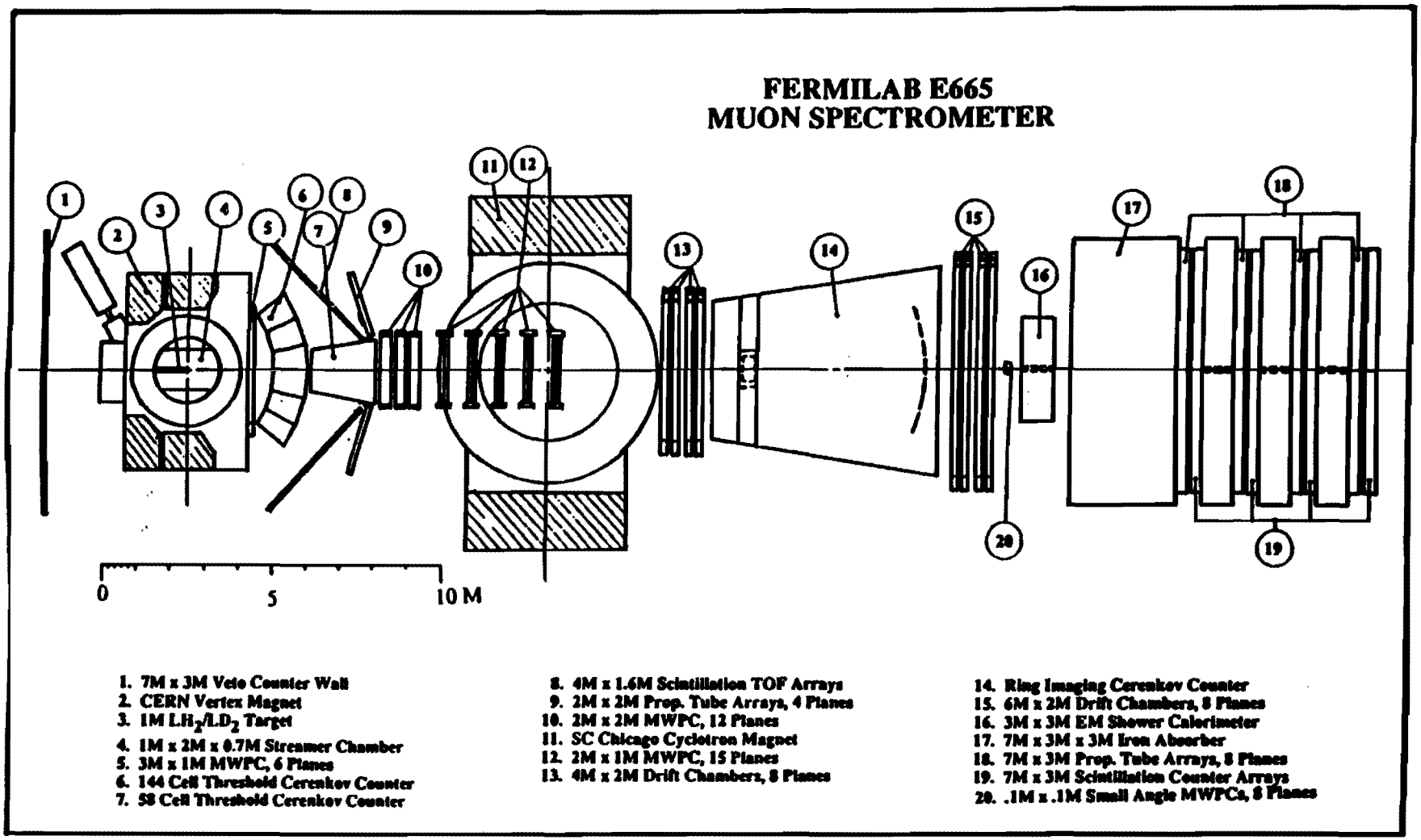
FERMILAB E665
MUON SPECTROMETER
0
5
10 M
1. 7M x 3M Veto Counter Wall
2. CERN Vertex Magnet
3. 1M LH_2/LD_2 Target
4. 1M x 2M x 0.7M Streamer Chamber
5. 3M x 1M MWPC, 6 Planes
6. 144 Cell Threshold Cerenkov Counter
7. 58 Cell Threshold Cerenkov Counter
8. 4M x 1.6M Scintillation TOF Arrays
9. 2M x 2M Prop. Tube Arrays, 4 Planes
10. 2M x 2M MWPC, 12 Planes
11. SC Chicago Cyclotron Magnet
12. 2M x 1M MWPC, 15 Planes
13. 4M x 2M Drift Chambers, 8 Planes
14. Ring Imaging Cerenkov Counter
15. 6M x 2M Drift Chambers, 8 Planes
16. 3M x 3M EM Shower Calorimeter
17. 7M x 3M x 3M Iron Absorber
18. 7M x 3M Prop. Tube Arrays, 8 Planes
19. 7M x 3M Scintillation Counter Arrays
20. .1M x .1M Small Angle MWPCs, 8 Planes

FIGURE 1

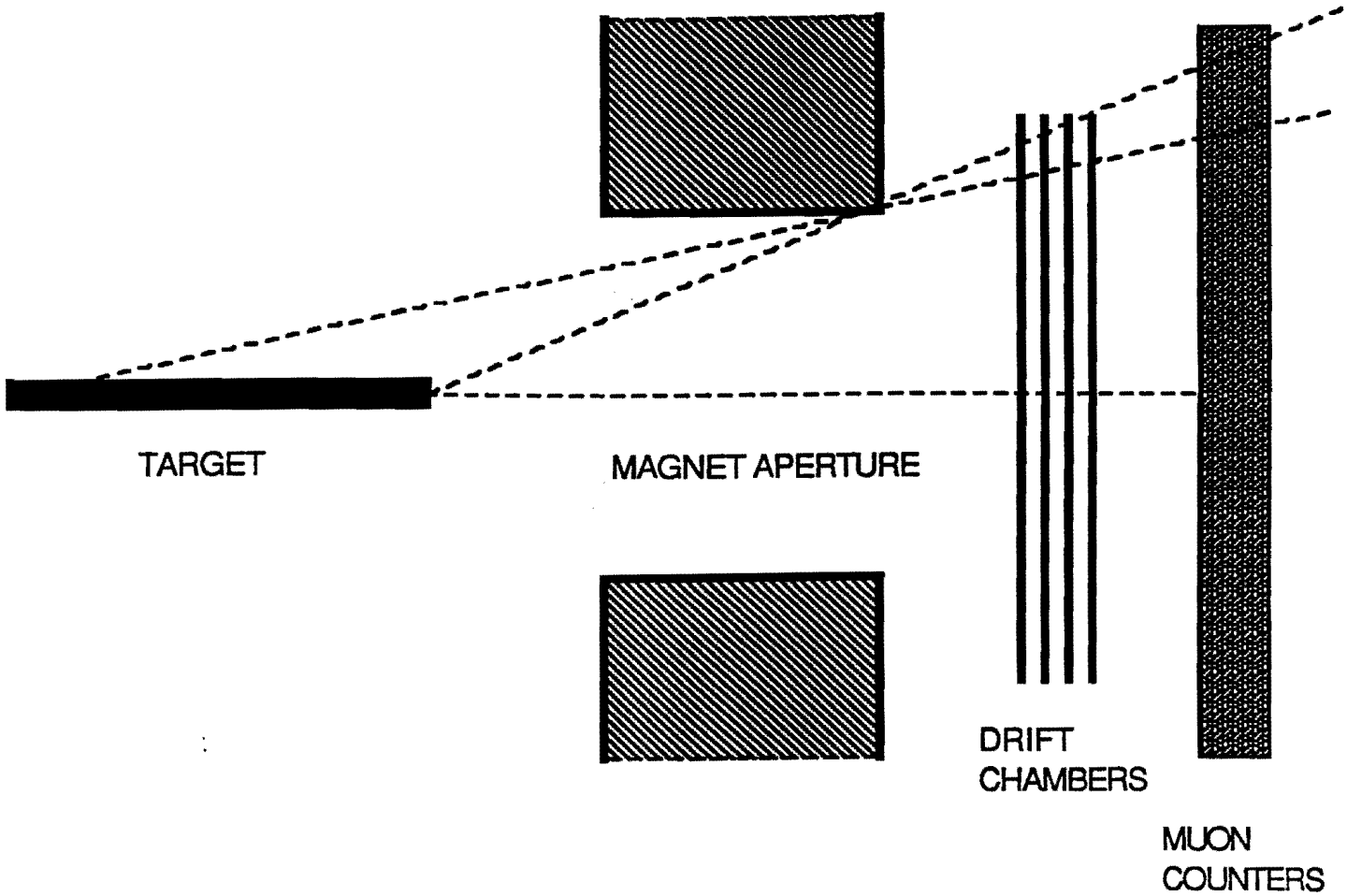

FIGURE 2
Vertical aperture - limiting devices

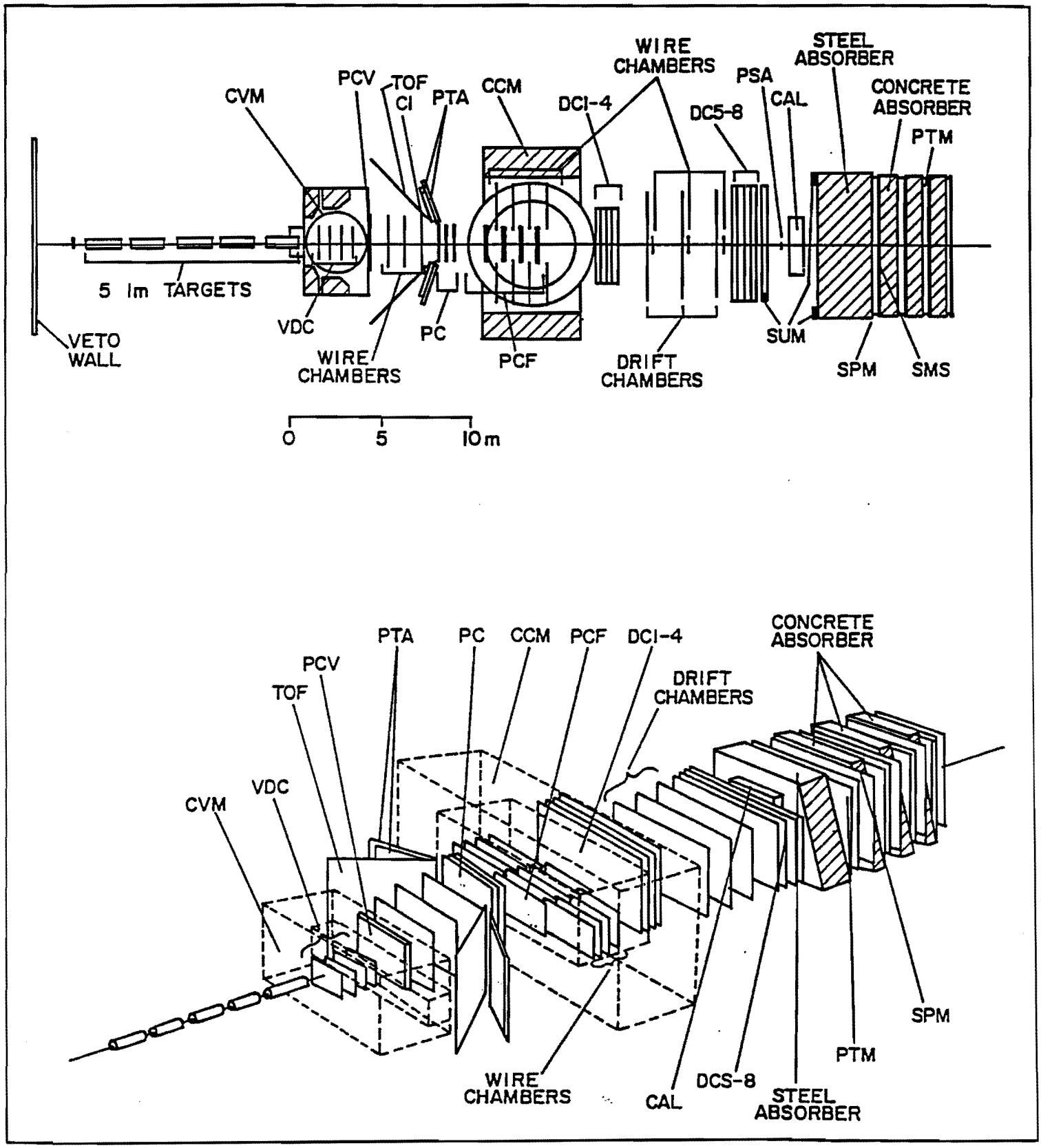

FIGURE 3
Modification of E665 proposed at Breckenridge

Magnet arrangement.

We have not yet decided upon the magnet arrangement. There are three possibilities;

(a) to use the Chicago Cyclotron Magnet alone, as in E98/E398,

(b) to use the two magnets, the vertex magnet and the CCM bending in the same direction,

and

(c) to use the two magnets in a quasi-focussing arrangement as in E665 and shown in Figure 4.

The choice will be made to meet the following criteria; Under (a) and (b) the muons will be bent away from the beam and track finding will be easier. Under (c) the existing trigger logic (which for level 2 is complex) may be used. Under (a) the target can be closer to the counters (18) and obstacles (the CCM poles 11) that define the vertical aperture, and therefore the efficiency at high momentum transfers will be greater. In Figure 5 we show, following a representation of Kirk in 1969, how muons corresponding to different momentum transfers might map onto a trigger counter at the rear of the apparatus.

The beam.

We propose to use the Fermilab muon beam with no appreciable hardware modifications. The performance of this beam has compared well with the calculations of Jorge Morfin and Anthony Malensek, so that it is appropriate to use Morfin's calculations for any extension to other proton or muon energies. With 800 GeV incident protons, we expect that the μ/p ratio is 10^{-4} for 300 GeV muons, and $6*10^{-6}$ for 500 GeV muons. We note that the beam recurrence period (reciprocal of repetition rate) is 54 seconds, and beam spill 20 seconds. This has been compared with the CERN muon beam with 450 GeV protons, where the μ/p ratio is $5*10^{-6}$ at 300 GeV, the recurrence time 14.4 seconds, and spill length 2.2 seconds. For the same number of protons in the accelerator FERMILAB has 8 times as many 300 GeV muons, and many times the number at higher muon energies. The duty cycle is also preferable at FERMILAB, so that if the instantaneous rate is the limit, an experiment at FERMILAB can take data 2.5 times as fast as one at CERN.

A comparison of the beam intensities between FERMILAB and CERN is shown in Figure 6.

Of course we propose to take advantage of any increase in the energy of the proton beam by increasing the energy of the muon beam in proportion, and hence

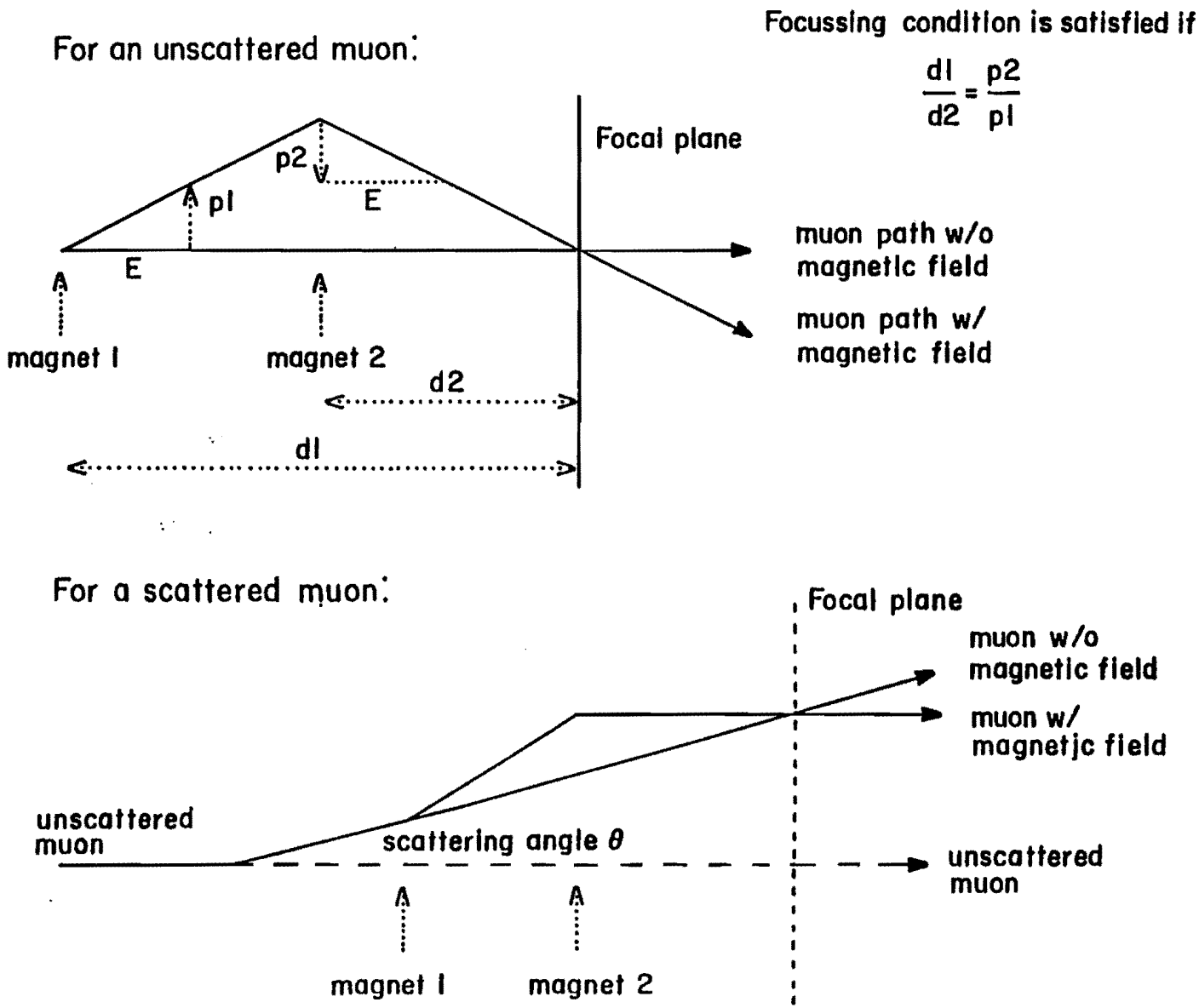

FIGURE 4
Focussing in E665

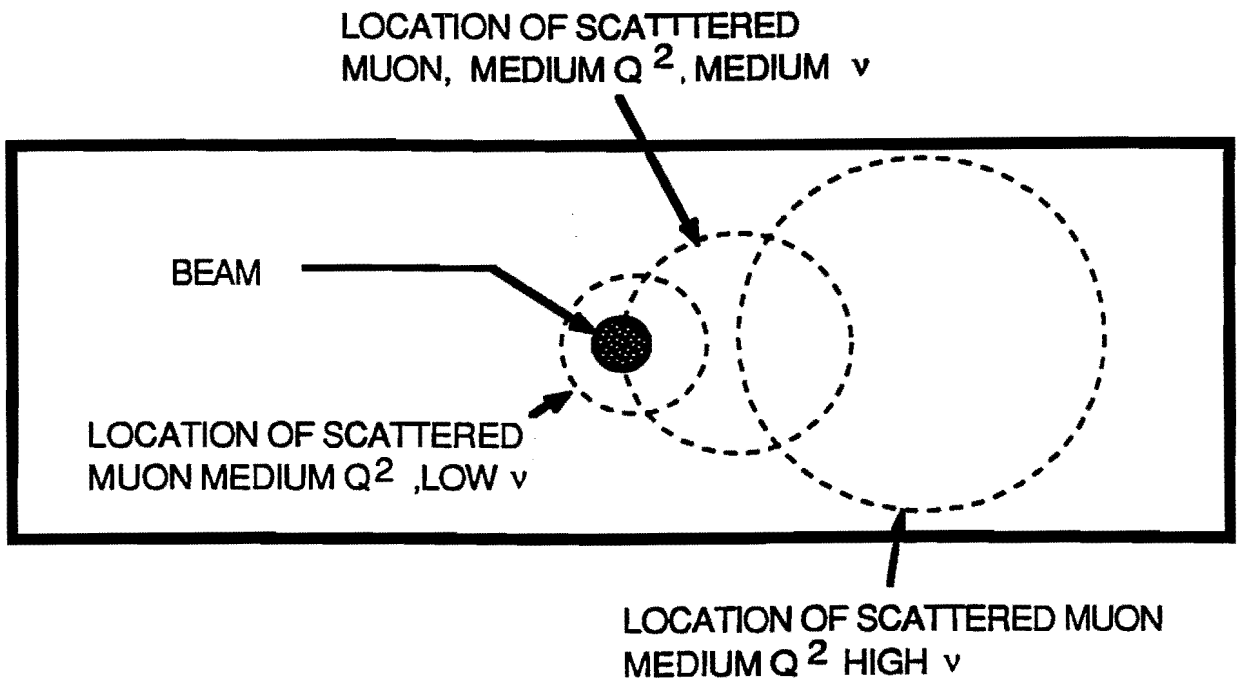

FIGURE 5
"Kirk" Plot of Beam Location in Rear Counters: Non-Focussing

to increase the upper limit of q^2 .

Measurement of cross sections.

In principle the measurement of a cross section is very simple; close attention need only be paid to the measurement of a few quantities. In Figure 7 we illustrate schematically what has to be measured. We start with the "old fashioned" way applicable to the situation where particle beams are intense and concentrated.

A beam of leptons of energy E, impinge upon a target of thickness t and density ρ. The intensity of the beam must be measured either by counting the particles, or measuring the current. At a scattering angle θ, all particles that pass into a defined aperture A are measured, and their energy E' determined.

In a muon scattering experiment this simple concept is modified; the beam is not well defined either spatially or in energy, so that the energy and angle of each muon must be determined.

Count rates.

Estimates can be made for a variety of situations. We hope that it will be possible to install a hydrogen target of 10 meters in length. However, at the present time we are unsure whether a 10 m target is reasonable in the area in front of the magnets and calculate for a shorter target of 5m, with a matching 2 1/2 m D2 target. We present the expected statistical error for running at 500 GeV muons, for either:

5 m hydrogen

2.5 m deuterium

10 m carbon

All for the existing E665 configuration with the target in front.

Figure 8 shows a possible measurement of F_2 in about 9 months of good data running at 10^{13} protons per pulse. ($1.9 * 10^{13}$ muons at 500 GeV). Figure 9 shows the measurement of $F_2{}^n$- $F_2{}^p$ with 9 months each of running on 2 1/2 m D and 5 m H. Figure 10 shows the simulation of Figure 9 in a different way; showing how well we can measure the variation $F_2{}^p$- $F_2{}^n$with q^2 at different x values. Figure 11 shows the very precise numbers available for running for the same length of time on 10 m of carbon. Figure 12 shows the simulated data in a different way; the ability to

measure the gradient of F_2 with q^2 with a 10 m C target, compared with the much inferior statistical accuracy available with the existing BCDMS experiment. Figure 13, taken from the proposal to CERN of Guyot et al, shows how well they could measure α_s with a 20 m carbon target with the same number of incident muons at 300 GeV. With a 10 m carbon target at Fermilab, we could do as well, but would also add two more points at |q| of 20 and 25.

Definition of an aperture.

In the early precise electron scattering experiments referred to above, the aperture was the aperture of the magnet, or in the case of the reference above, a specially designed tungsten lined aperture. The area was the geometric area, with a small correction for aperture penetration. We note that the necessity to define an aperture did not, in itself, limit the accuracy. The claimed accuracy was better than +/- 1/2 %.

This procedure will not work for muon scattering, because of the penetration of apertures by muons. The aperture must be defined by counters of some sort. These will lie within the geometric apertures of the big obstacles (magnet poles, coils, etc.,) Usually a small "no-man's-land" is used on the edge of the counters, so that scattering off these large obstacles need not be precisely determined. These counters will define the angle, and to some extent, the energy also. If the acceptance is less than 100%, this definition is important for the determination of systematic errors. All the proposed schemes have this problem; the toroid has it because of the limited (60%) acceptance in ϕ; the dipole systems have it at high q^2 because of the limited magnet apertures.

Although some people have claimed otherwise, we do not see any distinction that can be made between magnet schemes on this ground.

Counting the muons.

In the experiments on electron scattering, the electrons that passed the defining aperture were counted with high efficiency; thus in an experiment performed at Orsay in 1961, the efficiency was quoted as 99.5 +/- 0.5%. However, in muon scattering experiments, it is necessary to distinguish the scattered muon from other particle tracks, and from the halo around the beam. This has sometimes made a high efficiency hard to achieve.

When the muons are far away from the beam and its' close-in halo, they are easy to count. It was in recognition of this that the first Fermilab muon experiments (E98 and E398) used a single magnet to spread out the particles; then the particles

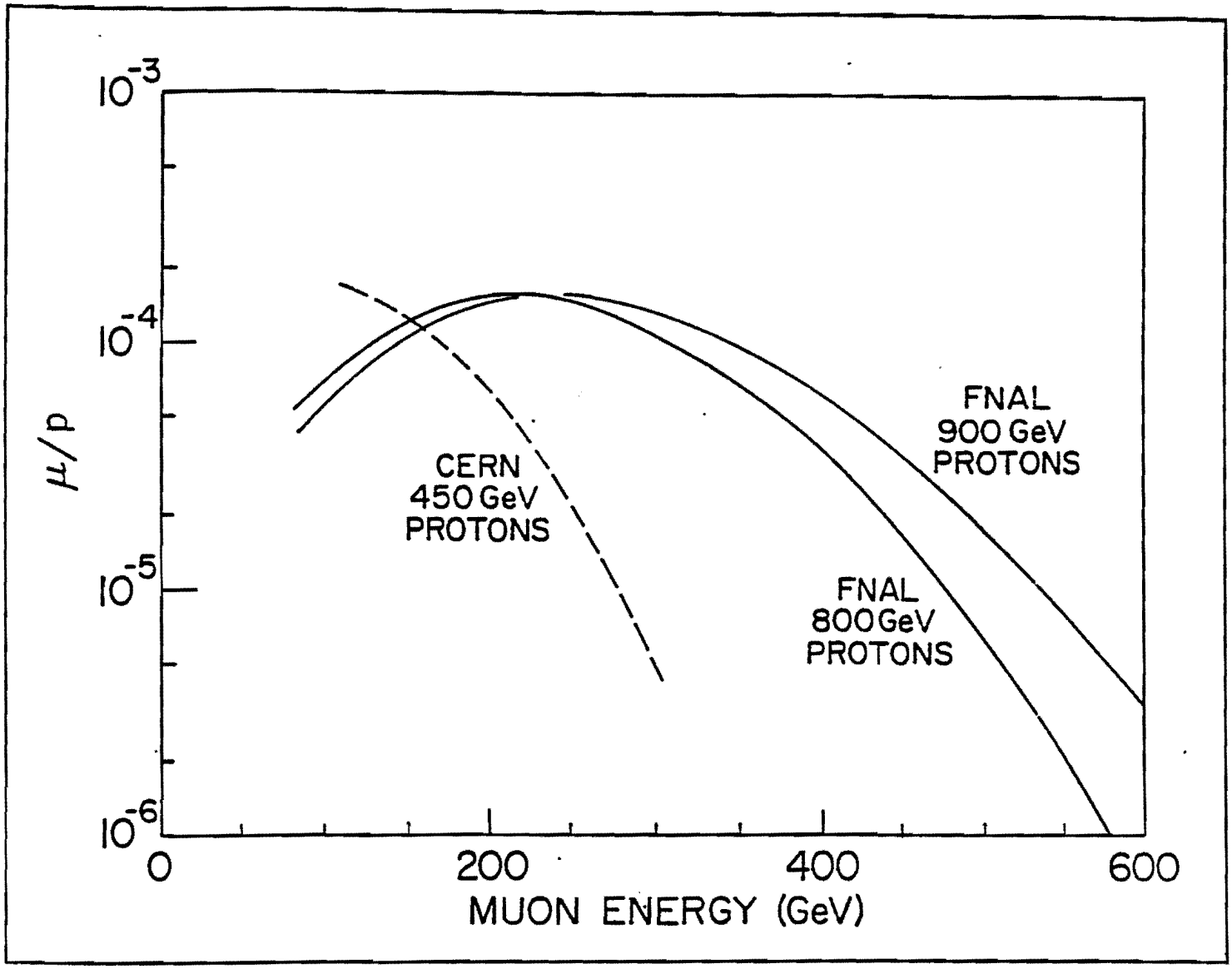

FIGURE 6
μ/p Ratios for the CERN and FNAL μ Beams

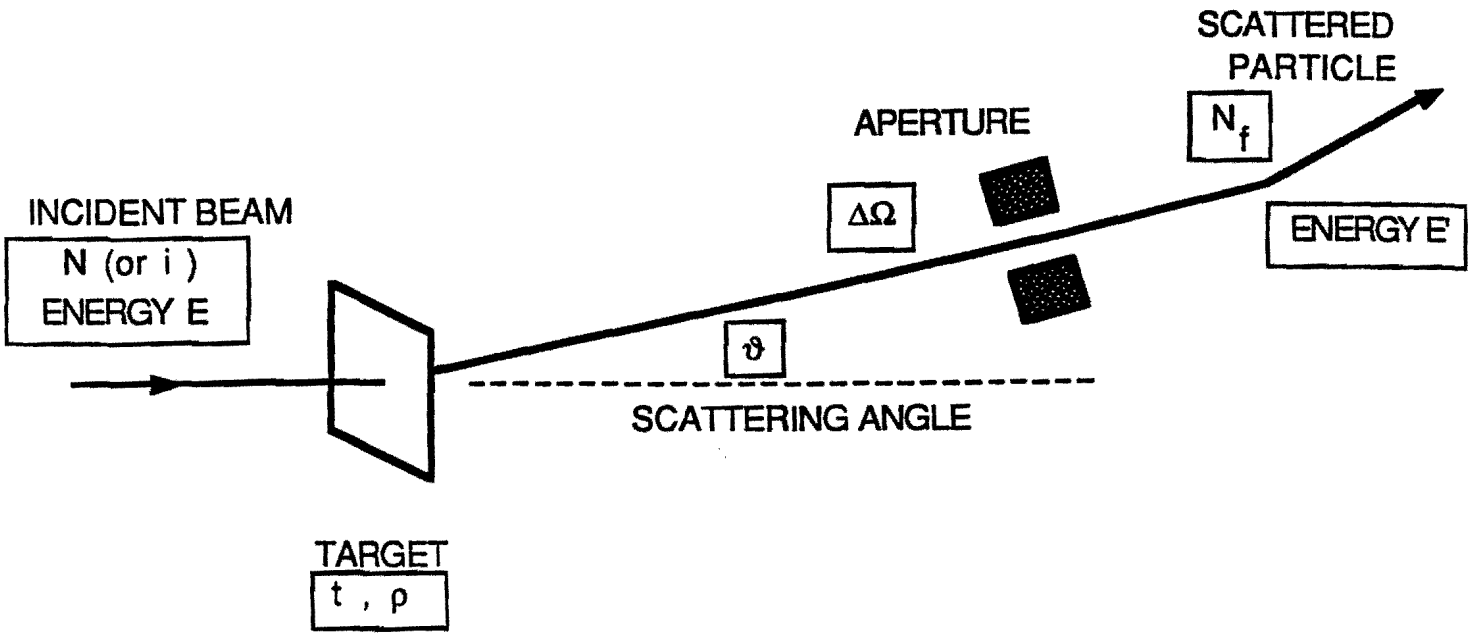

FIGURE 7
The Crucial Quantities for a Cross Section Measurement

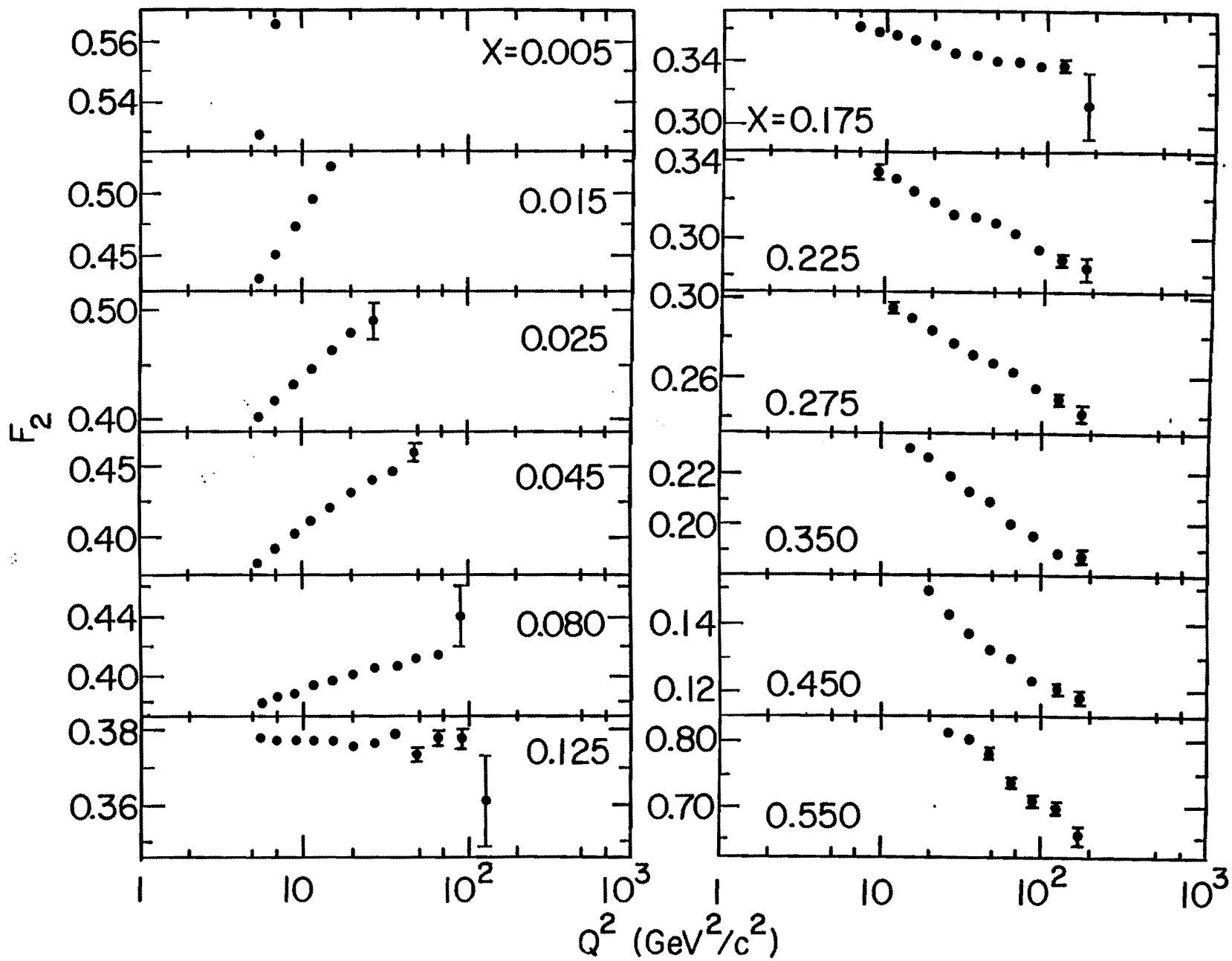

FIGURE 8

F_2^p $1.9 * 10^{13} \mu$'s

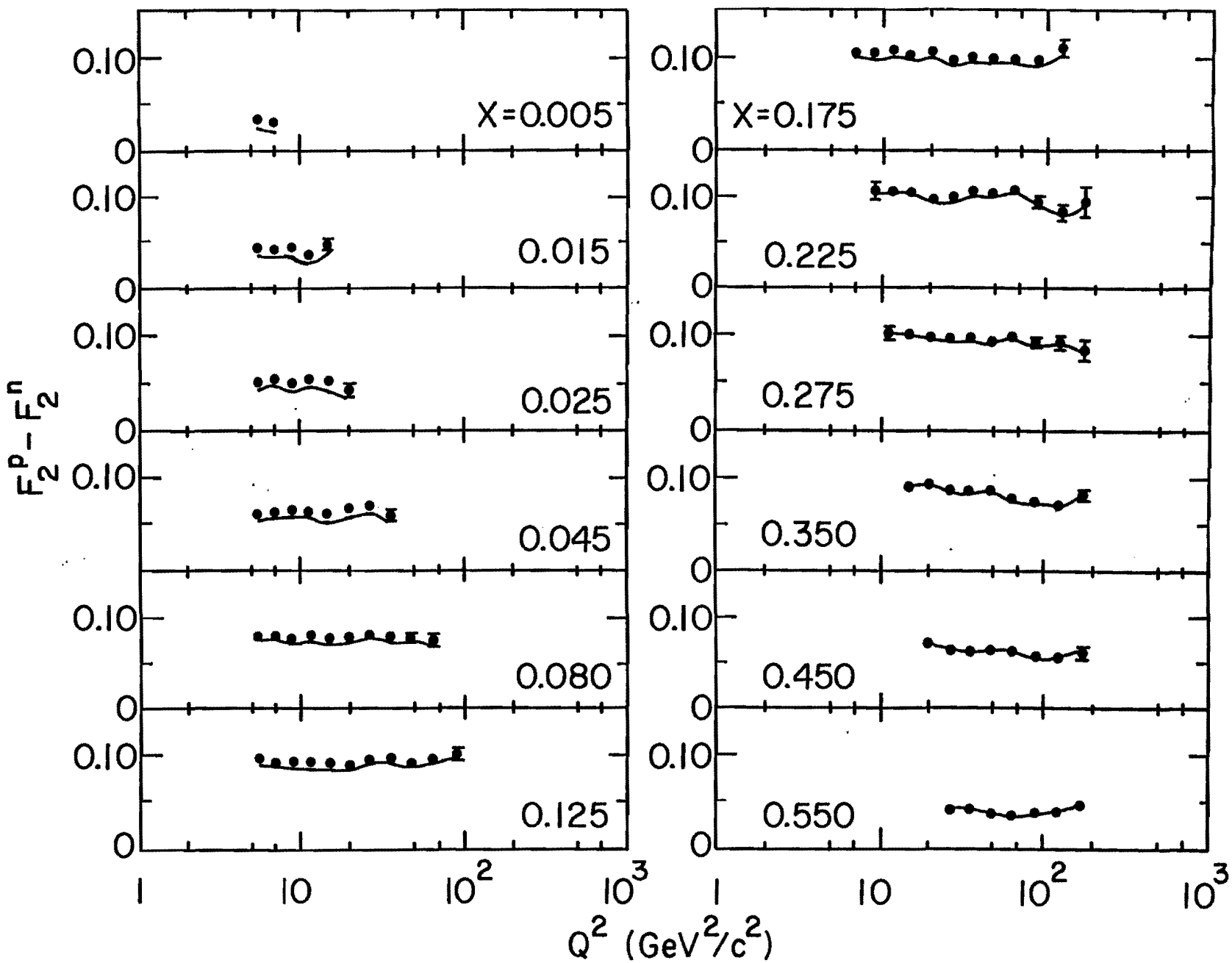

FIGURE 9

$F_2^p - F_2^n$ $1.9 * 10^{13} \mu$'s

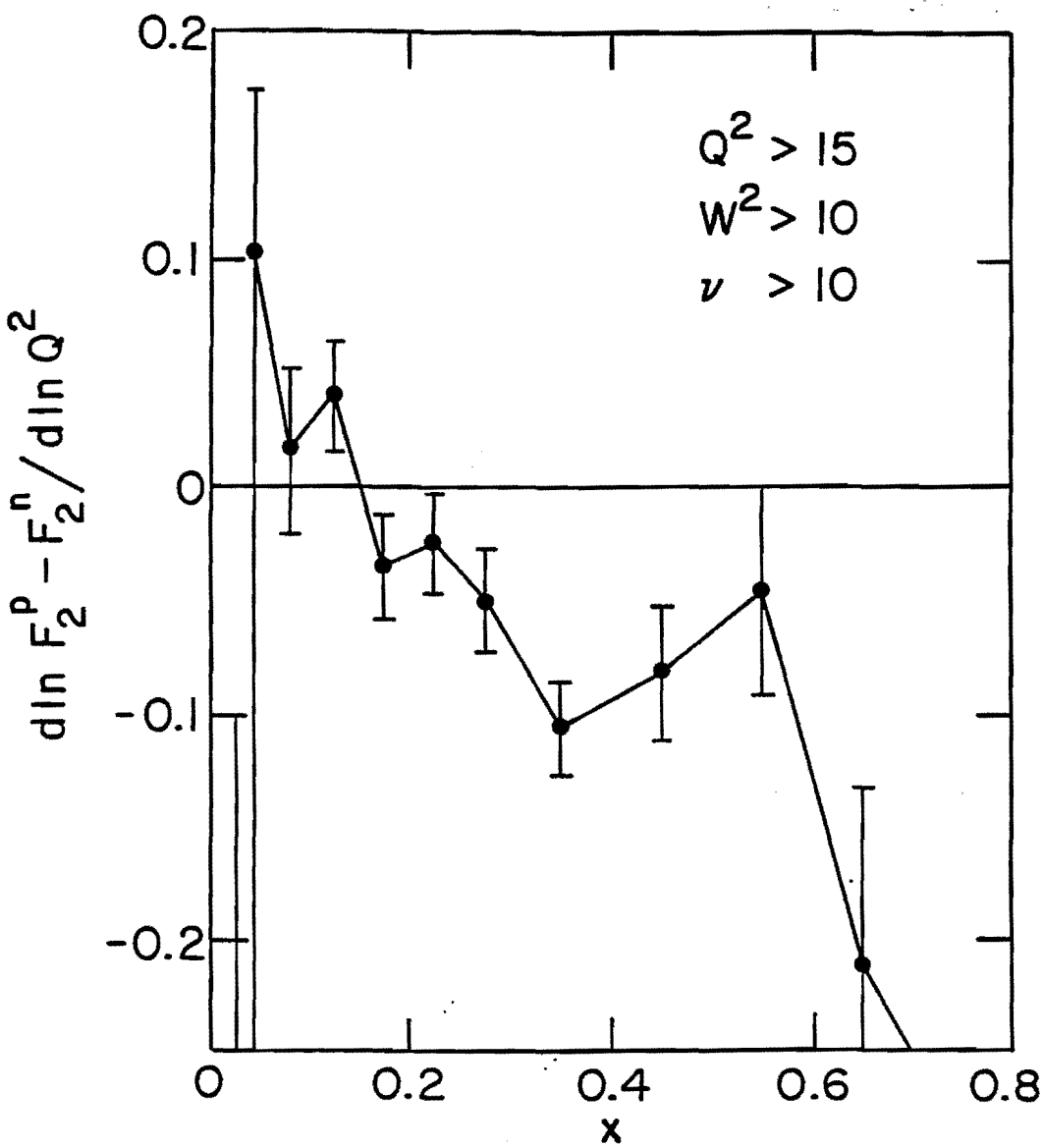

FIGURE 10
Logarithmic Slope of $F_2{}^p$- $F_2{}^n$ 1.9 * $10^{13}\mu$'s

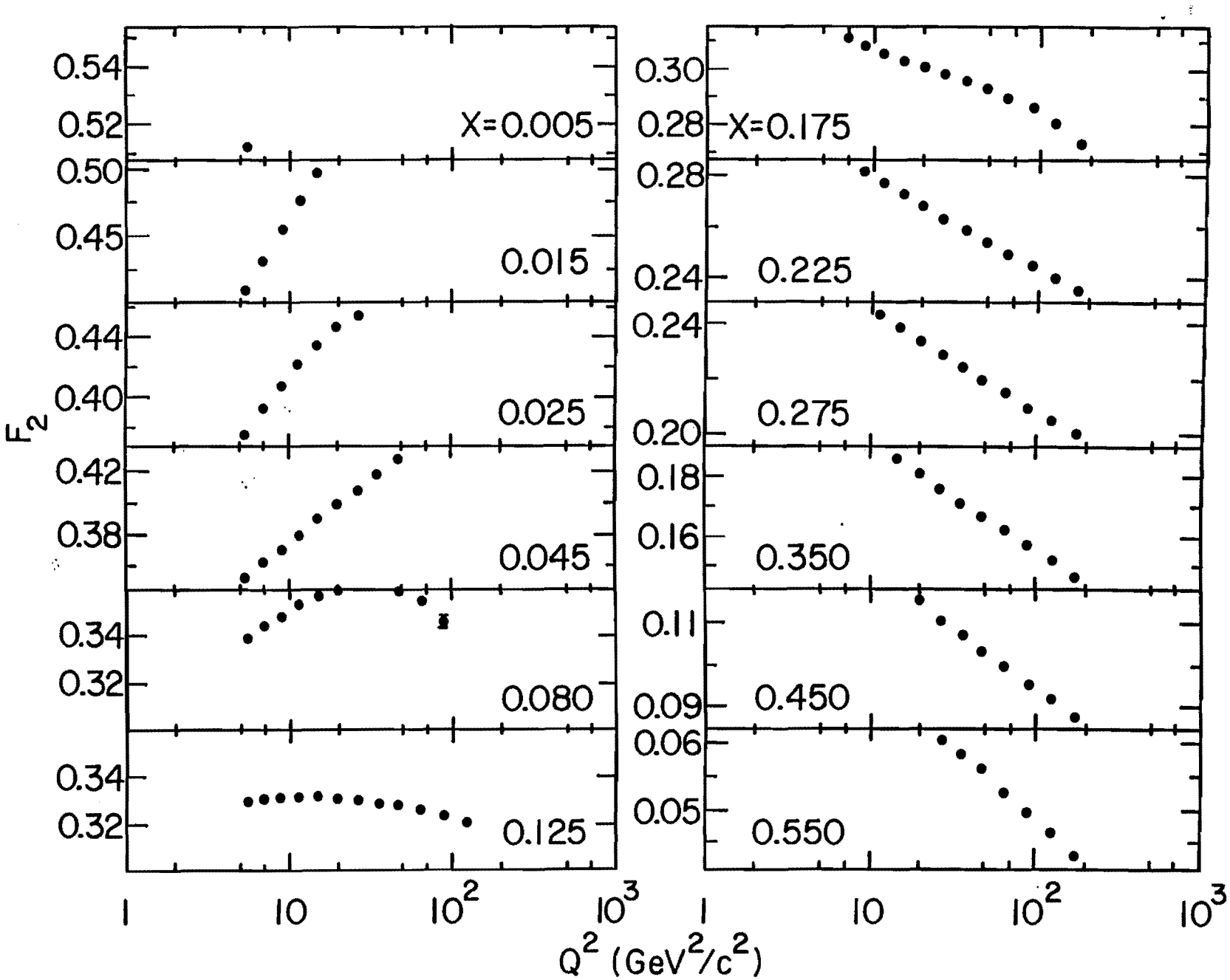

FIGURE 11

F_2 10 m Carbon Target $1.9 * 10^{13} \mu$'s

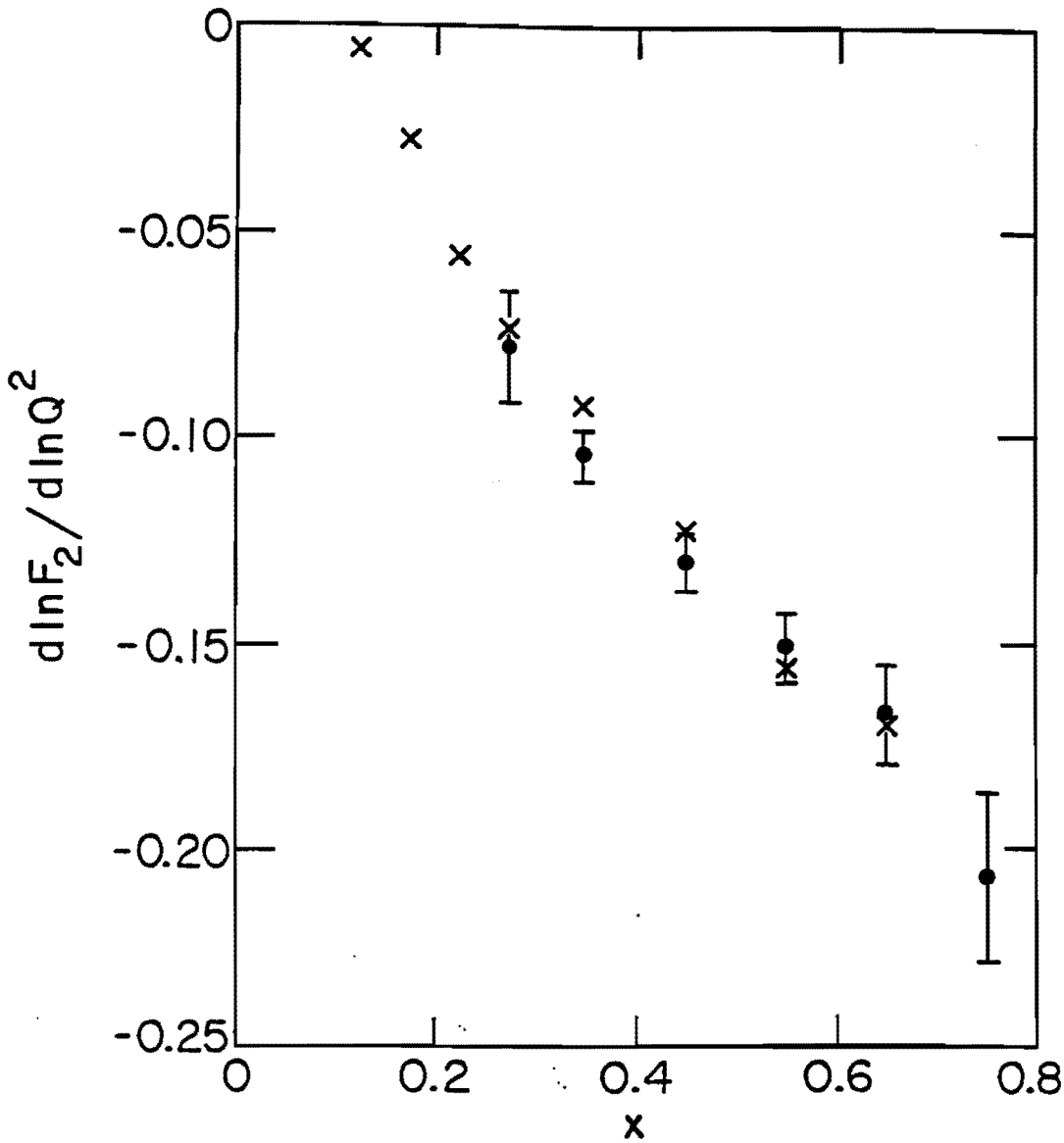

FIGURE 12
Comparison of present proposal (x) for 10 m carbon
with BCDMS carbon data (•)

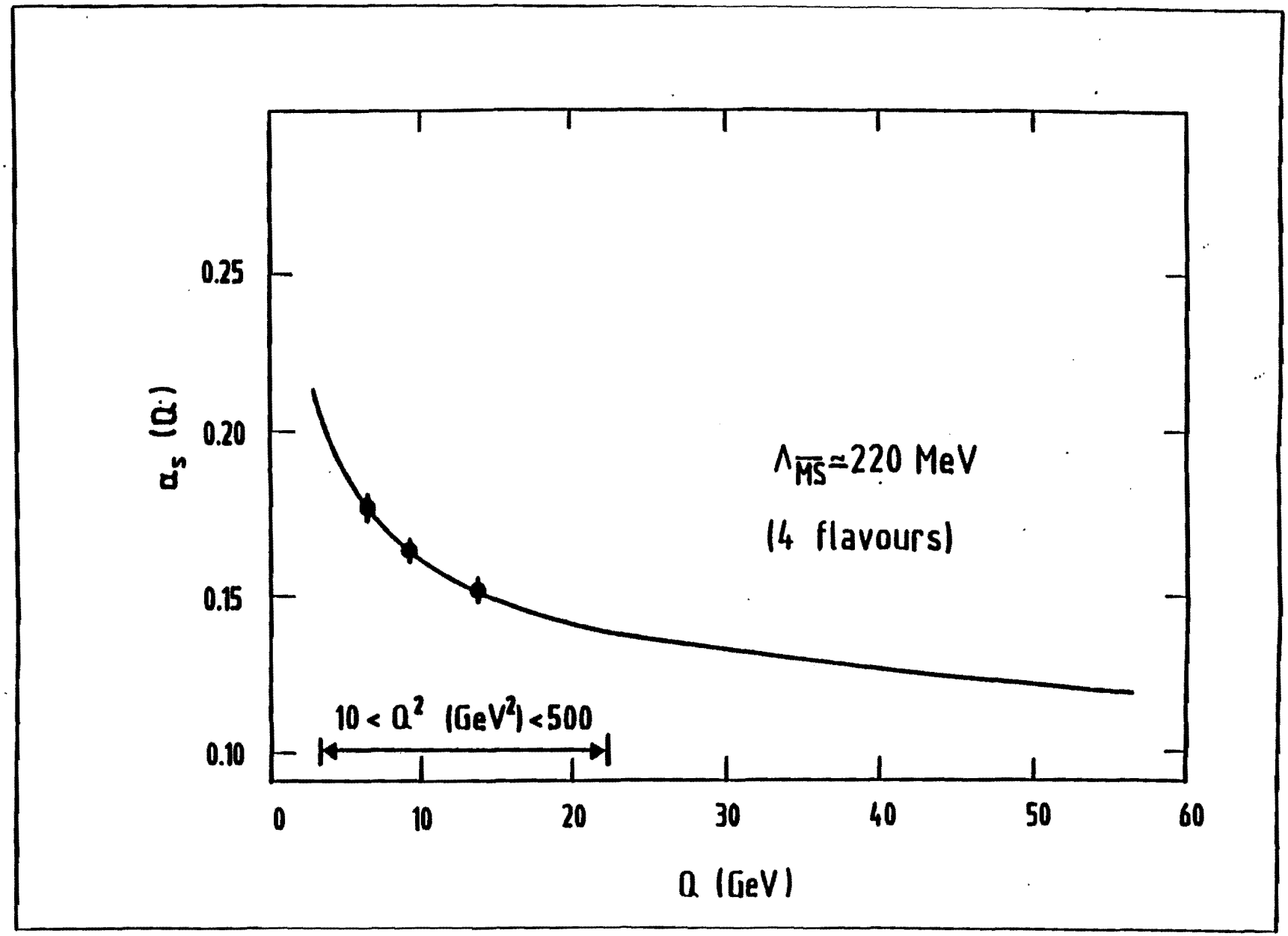

FIGURE 13
Guyot et al. CERN proposal for the running of α_s

were detected in a tight group of 4 efficient spark chambers each with 2 dimensional readout in each chamber. They claimed over 99% efficiency in identifying and measuring tracks that were more than 30 cm from the beam. The proportional chambers in the CERN EMC collaboration were more spread out and they claim a lower identification efficiency for reasons unstated.

E665 has a different magnet arrangement; this brings many of the scattered muons into a quasi-focus close to the beam and its' halo. The efficiency in E665 is presently about 95%. The reasons for the 5% inefficiency are not completely clear at this time, but in this letter of intent several actions are proposed to bring the inefficiency to less than 1%.

Measurement of beam and scattered particle energies.

Since the cross section at constant laboratory scattering angle varies rapidly with energy, this must be measured accurately. We do, however, note that if the energy of the incident muon and the scattered muon are measured with on the same scale, some of the uncertainties cancel. This comparison is made during the course of the experiment using unscattered muons.

The principal spectrometer magnet is large, and its' field has been measured by a Hall probe to better than 0.1%. We will use an NMR probe in the 1992 run to ensure accurate use of the calibration. We also may use a long 10 m "flip-coil" to measure precisely integral B·dl. The last bend magnet in the beam, NMRE, which is used as a beam spectrometer, has been measured also with a Hall probe. We will propose that it be kept constant, in spite of higher electricity usage, and not ramped.

Experimental Configuration.

It is proposed to maintain the same general configuration as in E665. For convenience this is shown in Figure 1.

Beam.

No change is proposed in the hardware configuration, but since there are plans to raise the energy of the Fermilab beam, it is proposed to run at a higher muon beam energy also, as noted elsewhere in the text.

Beam spectrometer.

This consists of the last bend magnet, with scintillation counters and proportional chambers on either side to identify and measure beam tracks. Some small changes may be necessary to enable a higher count rate, or allow for the longer target (see below)

Target.

We propose that the target be a 10 m long liquid hydrogen or deuterium target in 4 sections. For a study of $F_2{}^p$- $F_2{}^n$we propose to use hydrogen in 5 m of the target and deuterium in 2.5 m of the target; these would be switched between front and back to minimize systematic errors.

Scattered particle spectrometer.

Magnet system.

As noted above, this has not yet been decided.

Particle identification

We expect to remove, or at least not to operate, those parts of the apparatus that are specifically for particle identification; the RICH assembly (14 in figure 1) and items 3 to 10 in figure 1. We may decide to retain the calorimeter so that gamma rays from radiative events can be identified and measured, thereby making the radiative corrections more understandable and hence more accurate.

Tracking chambers.

We will add more chambers for particle detection;

At large angles, we will add a set of drift chambers just downbeam from the CCM, of 4m by 2m. Frames (left over from E98) exist for these.

The 15 2m by 1m proportional chambers inside the magnet must be replaced by a larger proportional or drift chamber assembly covering the full width of the magnet pole.

The present 2m by 2m MWPC (item 10 in figure 1) in front of the CCM are old chambers originally used at CERN by NA24. They will be replaced by newer chambers with smaller spacing.

We expect to use the vertex detector now being constructed, although, if we choose the configuration without the CVM, the performance in the absence of the CVM field will not be optimal

Depending upon the magnet configuration, we will add MWPC in the beam region to fill the holes in the drift chamber.

Halo veto wall.

This counter wall (item 1 in figure 1) is presently located 3 m in front of the target (item 3 in figure 1) in the CVM. With a longer target the wall would have to be moved upstream to prevent suicide vetos by hadrons from the target. This would require special engineering construction to place a "slot" for the counter wall upstream of the present muon lab. Alternatively, in magnet configuration (a) the target would be just downstream of the present location. Suicides could also be prevented by placing an absorber wall on the downstream side of the veto counter wall, to absorb out the suiciding hadrons (as done in E98) .

Personnel and Institutions.

E665 was proposed in 1981; now 9 years later, many scientists want to move on to other experiments. This list of personnel and institutions is therefore only a part of the present E665 collaboration. However, we believe that they will be adequate to perform the experiments for two reasons.

(1) We will only be looking at the scattered muon; the amount of apparatus to be maintained, and the quantitity of analysis is therefore much less than in the full E665 experiment.

(2) We anticipate that we will be able to persuade others to join us in this experiment. We will discuss this extensively with participants of the Workshop on Hadron Structure Functions and Parton Distributions at Fermilab at the end of April 1990.

Harvard University

Professor F.M.Pipkin
Professor Richard Wilson
Post docs anticipated
Students anticipated

Fermilab

Dr. Heidi Schellman

University of California at San Diego

Professor Hans Kobrak
Professor Robert Swanson
students anticipated

University of Illinois at Chicago Circle

Professor Mark Adams
students

Wuppertal University, FRG

Dr Helmut Braun
students anticipated