Measurement of the Magnetic Moment of the Omega Minus Hyperon

K.B.Luk
University of Washington

R.Rameika
Fermilab

P.Border
University of Michigan

C.James
University of Minnesota

P.Petersen
Rutgers University

K. B. Luk
Spokesperson
312-840-4197

Abstract

An experiment for determining the magnetic moment of the Ω^- hyperon is proposed. A polarized Ω^- sample is produced by 800 GeV protons or negatively charged strange baryons. The polarization vector is precessed in a magnetic field and the decay products of the $\Omega^- \to \Lambda K^-$ are detected with a conventional magnetic spectrometer. A precision of $\delta\mu_\Omega \leq 0.1$ nuclear magneton can be achieved in 1000 hours of running in Proton Center.

Introduction

One of the important static properties of an elementary particle is its magnetic moment. The excellent agreement of the QED calculation and the experimental values of the electron and muon magnetic moments has long been considered one of the great successes in physics. The situation is not as clear in the hadron sector. Hadrons are composite objects which are made up of quarks and the dynamics of quarks inside hadrons are not well understood. The recent discovery that hyperons produced by protons in inclusive interactions are polarized[1] makes it possible to determine the hyperon magnetic moments with high precision.[2] Using the experimental values of the proton, neutron and lambda magnetic moments, the other hyperon moments can be, in principle, predicted to 1 % accuracy. The measured values and the predictions of the baryon magnetic moments are shown in Table 1. The discrepancies are statistically significant. Various effects that may improve the predictions, such as configuration mixing, anomalous quark moments, pion cloud contributions and relativistic corrections, have been proposed.[3] Nevertheless, as can be seen in Table 1, the global improvement is small. For the Ξ^-, in the worst case, the difference can still be of the order of 30 %. It has been speculated that the mismatch of the calculations and the measurements is because the

strange quark behaves differently in different environments.

When the environmental dependence, the quark moments and some of the mentioned corrections are parametrized in terms of the seven measured baryon magnetic moments, one can then predict the magnetic moment of the Ω^-. Using the non-relativistic quark model, Georgi and Manohar predicted $\mu(\Omega^-) = 3\mu(s)$ to be -2.25 +/- 0.09 n.m..[4] This is different from the SU(6) calculation which gives $\mu(\Omega^-) = 3\mu(s) = 3\mu(\Lambda) = -1.84$ n.m.. Lipkin recently proposed a "two-component model"[5] in which one component is the additive SU(3) quark model with all quarks behaving like strange quarks, and the second component is a non-additive mechanism which affects only non-strange quark contributions, thus breaking the SU(3) symmetry. He concluded that $\mu(\Omega^-) = 3\mu(s) < 3\mu(\Xi^-) < -2.2$ n.m..

Alternatively, one can work out the baryon magnetic moments from QCD using the QCD sum rule or lattice calculations. In principle, these QCD calculations should have the same predictive power as those of QED. Based on a lattice calculation without considering the effects of the virtual quark pairs, Bernard et al. found that $\mu(\Omega^-) = -1.7$ +/- 0.6 n.m..[6] It is important to point out that both Georgi et. al. and Lipkin concluded configuration mixing in

Ω^- is zero. This implies that Ω^- is the simplest system in which to understand the behaviour of the strange quark. Therefore, a precise measurement of $\mu(\Omega^-)$ is very interesting.

Experimentally, there has been only one attempt to determine $\mu(\Omega^-)$.[7] In E620, Ω^-'s were produced by 400 GeV protons incident on a solid beryllium target, with average x of 0.5 and p_t of 1 GeV. After passing through a magnetic channel, the charged particles of the $\Omega^- \to \Lambda K^-$ decay were detected with the Neutral Hyperon Spectrometer. In all, 1,743 reconstructed $\Omega^- \to \Lambda K^-$ decays were collected and an average polarization of the Λ from the Ω^- decay of 0.12 +/- 0.08 was measured. Using this polarization signal, $\mu(\Omega^-)$ was determined to be -2.1 +/- 1.0 n.m.. If the E620 Ω^- polarization signal is considered statistically significant it implies that the magnitude of the vector polarization of the Ω^- is between 10 and 20 %. This should be compared with that of the other hyperons <u>produced by protons</u> in inclusive reactions. In the case of the Λ, Ξ^0 and Ξ^-, the magnitude of the polarization is of the order of 15 % in the same kinematic region. The polarization increases as a function of x and p_t, up to p_t of 1 GeV. For p_t > 1 GeV, the Λ polarization is found to be proportional to x only.[1] In contrast to Λ's and Ξ's, $\bar{\Lambda}$'s produced by protons in the same kinematic region are

not polarized at all. It appears that the strange quark is either produced polarized by some unknown mechanism or is polarized as it combines with the leading spectator quark or diquark to form the hyperon. On the other hand, even though the $\bar{\Lambda}$ and the Ω^- do not contain any quark common to the proton, the production cross sections of the $\bar{\Lambda}$ and the Ω^- by protons in the same kinematic region are quite different. The invariant production cross section of the Ω^- behaves like $(1-x)^5$, in contrast to that of the $\bar{\Lambda}$ which is $(1-x)^{7.5}$. Thus, it is difficult to conclude whether or not the Ω^-'s <u>produced by protons</u> should be polarized.

Therefore we propose two parts for this experiment. In the first part, the primary proton beam in Proton Center will be used to produce Ω^-'s which then pass through a momentum selecting channel embedded in the Proton Center hyperon magnet. If the Ω^-'s are polarized this same magnet will serve to precess the polarization vector. With about 100 hours of running, the polarization of the Ω^- can be measured to a precision of 2 %, or better. We have to emphasize that a null polarization of this part is very interesting in itself as it provides further information about the inclusive hyperon polarization mechanism. In particular, it would indicate that the strange quark is not produced polarized.

In the second part of the experiment, we shall make use of the leading particle mechanism to create the Ω^-. Only the equipment upstream of the Proton Center hyperon magnet is modified. The Ω^-'s are produced by a negatively charged strange beam created from the primary proton beam incident on a target upstream of the Ω^- production target. A magnet positioned between the targets is used to select the momentum of the negatively charged beam and to sweep away the primary proton beam.

Experiment

Charged Hyperon Production by Protons

Figures 1a and 1b show an elevation view and a plan view of the set-up which is upstream of the spectrometer. The proton beam is deflected in the vertical plane by an upstream vernier magnet and is restored to the hyperon target T2 by a set of dipoles M1. This bend string is the same as the one requested in P732. M2 is a 5 m long magnet which is not turned on in the first part of the experiment. The proton beam will pass through the aperture of M2. A 1 mm. square half interaction length beryllium target is used to produce the charged hyperon beam. The production angle will be +/- 2.5 mrad for an 800 GeV proton beam. The hyperon polarization is produced in the horizontal plane and is precessed by the vertical field of the 7 m long magnet M3. The curved channel inserted in the hyperon magnet is shown in Fig.2. It is made up of brass blocks, each with a straight cylindrical hole approximately centered on the circular arc of the central orbit. The middle block and the last block at the downstream end are reinforced by circular tungsten inserts. A 17.5 mrad bend is defined by the centers of the beryllium target, the central 5 mm diameter tungsten collimator, and the 12 mm diameter output collimator. Displacement of the central

orbit from the infinite momentum orbit at the exit of the channel is 63 mm.

The inclusive production cross sections of hyperons by protons at 2.5 mrad and 800 GeV have not been measured. However, these were determined at 5 mrad with 400 GeV protons on a beryllium target in E620.[7,8] In order to estimate the negative particle fluxes in this proposal, the invariant inclusive cross section $E\frac{\delta^3\sigma}{\delta p^3}(p + Be \rightarrow Y + X)$, where $Y = \pi^-, \Sigma^-, \Xi^-$ or Ω^-, was assumed to scale in the variables x and p_t between 400 GeV and 800 GeV. The calculated particle ratios at the target are consistent with the CERN charged hyperon measurements[9] and the E497 results.[10] Integrated fluxes at 8 m away from the target per 10^{10} incident protons are provided in Table 2. With a field integral of 23.44 T-m (17.58 T-m), close to the maximum of 24.00 T-m, the Ω^- momentum spectrum after transmission through the 7 m long magnetic channel is shown in Fig.3a (Fig.3b). The spectra of the other particles are similar.

Charged Hyperon Production by Negatively Charged Strange Beam

Fig.4a and Fig.4b show the elevation and plan views of the apparatus upstream of the spectrometer. In this part

of the experiment, the primary proton beam will hit one of the two 1 mm square half interaction length tungsten targets, T1. The incident angle of the proton beam is 0 mrad. The tungsten targets are placed in front of the entrances of two magnetic channels which lie in a vertical plane and curve toward each other. These channels are made up of brass blocks, each with two straight cylindrical tubes laid out in the same manner as described before. Since the radius of the channel in the 1 m long middle block is 2 mm and 3 mm in the last block, the beam divergence in the transverse direction is small. The separation of the centers of the central orbits is 4 cm at the upstream end of M2, 3.5 cm at a distance of 3 m away from the tungsten targets and 1 cm at the downstream face of M2. A 1 cm square, one interaction length long copper target T2 is positioned 1 m downstream from the exits of the channels in M2. The central rays which emerge from the collimator will hit T2 at +/- 5 mrad, corresponding to the primary proton beam striking the bottom or top T1 target respectively.

The flux and composition of the negative beam produced by protons at 0 mrad is calculated using the invariant cross sections $E\frac{\delta^3\sigma}{\delta p^3}$(p+Be->Y+X), where Y = π^-, Σ^-, Ξ^- or Ω^-, measured at 2 mrad by the CERN hyperon group[9], assuming scaling in x and p_t is valid between 200 GeV and 800 Gev,

and the atomic number dependence is $A^{2/3}$. The yield is given in Table 3. The momentum spectrum of the Σ^- at 6 m away from the tungsten target is shown in Fig.5.

In order to estimate the hyperon yields with the negative beam hitting the copper target, the following argument is employed. The production of a Ξ^-(dss) from a proton(uud) and an Ω^-(sss) from a Σ^-(dds) is similar in the sense that two new quarks are created. Thus the production cross section of the former process at 5 mrad and 400 GeV is used to calculate the yield of the Ω^- from Σ^-'s. The other interactions are worked out in a similar fashion by relating one to the others that have been determined. Table 4 shows the yields of the negatively charged hyperons at 8 m downstream from the copper target with a 5 mrad negative beam intensity of 10^8. With a field integral of 17.58 T-m, the momentum spectrum of the Ω^- downstream of the collimator in M3 is shown in Fig.3b.

Charged Hyperon Detection

The layout of the spectrometer in plan and elevation view are shown in Fig.6. It is similar to the set-up used in E620 for detecting the decays $\Xi^- \to \Lambda\pi^-$ and $\Omega^- \to \Lambda K^-$. The length of the detector is about 50 m. The apparatus is lined up with respect to the axis which is tangent to the

central orbit at the exit of the channel in M3. The momentum analyzing magnets, M4 and M5, are BM109 magnets which have been used in previous experiments done in Proton Center. These magnets will be operated to provide a momemtum kick of 1.4 GeV which is sufficient to bend the negative and positive particles from a $\Xi^- \to \Lambda\pi^-$ or an $\Omega^- \to \Lambda K^-$ decay to opposite sides of the last wire chamber. The trigger will require a charged track upstream of M4 and at least one negative track as well as a positive track downstream of M5. That is, there must be a $\Lambda \to p\pi^-$ in the decay and this will eliminate the directly produced π^-'s, K^-'s and Σ^-'s. In logic symbols, the trigger is $S1.\overline{S2}.S3.S4.S6$. A similiar trigger, $S1.\overline{S2}.C4.C7L.C8R.S6$, was employed in E620 and the trigger rate was about 200 Hz with a 15 sec machine cycle. The yield of this trigger was of the order of 6 % and provided a good $\Xi^- \to \Lambda\pi^-$ sample that was free of backgrounds.[11] The trigger in this experiment is tighter and should provide a higher yield of three track events. The Ξ^- sample will also be analysed because it serves as another means to study systematic problems, if any. This is important for polarization measurements. Table 2 shows the detection efficiencies of $\Xi^- \to \Lambda\pi^-$ and $\Omega^- \to \Lambda K^-$. The efficiencies are about 25 % higher when the momentum of the Ξ^- and the Ω^- is 280 GeV. Since the decay topology of $\Xi^- \to \Lambda\pi^-$ and $\Omega^- \to \Lambda K^-$ is the same, it is necessary to identify the negative tracks or

apply software cuts in order to extract a clean sample of Ω^-'s. The latter method was used in E620. The cuts removed about 45 % of the genuine Ω^-'s, but background under the mass peak in the final sample was reduced to about 3 %. The Λ-K^- invarant mass distributions, before and after cuts, are shown in Fig.7a and Fig.7b respectively. Note that the vertical scale of Fig. 7b is logarithmic. The possibility of using a Cherenkov counter to identify the negative tracks (K^- vs π^-) is under investigation.

Magnetic Moment Measurement

The magnetic moment of the Ω^- (or Ξ^-) is defined as

$$\mu = \frac{g}{2}\frac{q}{m} S \qquad (1)$$

where q, m and s are the charge, the mass and the spin of the Ω^- respectively, and the (g/2) factor will be determined by the experiment. Because of the geometry of the apparatus, the spin and the momentum are normal to the magnetic field in the channel. These two vectors precess in the horizontal plane. The precession angle of the spin with respect to the momentum direction is given by

$$\theta = \frac{q}{m\beta}\left(\frac{g}{2}-1\right)\int B dl \qquad (2)$$

where $\beta = v/c \cong 1$ in this proposed experiment.[12] It is

interesting to note that this expression is valid for Ω^- even though its spin is 3/2.

After reconstruction of an event $\Omega^- \to \Lambda K^-$, $\Lambda \to \pi^- p$, the direction cosines ($\cos\theta_x$, $\cos\theta_y$, $\cos\theta_z$) of the proton in the Λ rest frame can be calculated. Here the coordinate axes are such that z is along the beam axis, x is horizontal, and y is vertical. The components P_x, P_y, P_z of the Λ polarization can be calculated for a reconstructed sample by determining the asymmetries of the form

$$\frac{\delta N}{\delta \cos\theta_i} = (1/2)(1 + \alpha_\Lambda P_\Lambda \cos\theta_i) \qquad i = X, Y, Z \qquad (3)$$

Geometrical biases in the apparatus which distort the distributions can be calculated with Monte Carlo techniques. Parity conservation requires $P_y = 0$. If the sign of the proton production angle is changed, P_x, P_z and the sense of the spin rotation are reversed, but not the biases. Thus, taking equal amounts of data with opposite production angles is vital to the elimination of apparatus biases.

The polarization vector of the Ω^- is related to the polarization of the Λ by the expression

$$\vec{P}_\Lambda = \frac{1}{2(s+1)}\left[1 + (2s+1)\gamma_\Omega\right]\vec{P}_\Omega \qquad (4)$$

where s=3/2 is the spin of the Ω^- and γ_Ω is the decay

parameter of the $\Omega^- \to \Lambda K^-$ decay. Since α_Ω is -0.026 +/- 0.026,[7,13] γ_Ω is either +1 or -1 (in the case of the Ξ^-, s = 1/2 and $\gamma_{\Xi^-} = -0.9$).[11,14] This implies that polarization of the Ω^- is

$$\vec{P}_\Lambda = \vec{P}_\Omega \qquad \text{or} \qquad \vec{P}_\Lambda = -.6\,\vec{P}_\Omega \quad .$$

The precession angle θ of Equation (2) is give by $m\pi + \arctan(P_x/P_z)$, where m is an integer. The value of m is determined by taking data at several values of the precession field. For N events, the error in the measurement of a single component of the Λ polarization is

$$\delta P_\Lambda = \frac{1}{\alpha_\Lambda}\sqrt{\frac{3}{N}} \quad .$$

The error in the precession angle is $\delta\theta = \delta P_\Lambda / P_\Lambda$. Therefore, in terms of nuclear magnetons, the error in the Ω^- magnetic moment is $\delta\mu_\Omega = 1.68\delta(g/2)$, where, from Equation (2), $\delta(g/2) = 15/(kP_\Lambda \int Bdl\sqrt{N})$. Taking $\int Bdl = 23.44$ T-m and an average $P_\Lambda = 0.08$ gives the formula $\delta\mu_\Omega = 13.4/(k\sqrt{N})$.

Request for Laboratory Facilities

Three 3 m dipoles are needed just upstream of the 7 m long hyperon magnet to give the maximum production angle of +/- 5 mrad. A 5 m long dipole magnet is also needed to form the negatively charged strange beam and to sweep away the primary proton beam in the second part of the experiment. A proton energy of 800 GeV to 1 TeV and an intensity greater than 10^{10} per 20 sec long spill is requested. About 250 hours of data at each polarity will be required to achieve the error $\delta\mu_\Omega \leq 0.10$ in the worst case k = 0.6. A total of 1000 hours in the Proton Center is requested, including tuning.

The group will supply the curved channel hardware, the MWPC's and their read-out electronics. Other electronics, CAMAC modules and on-line computer are requested.

The total number of triggers is of the order of 10^8. In E555, about 275,000 triggers could be logged on a tape and each tape took about 4,000 sec to process. In this experiment, the number triggers per tape will be comparable. The CPU time to analyze one tape is also about the same as E555. Therefore, 500 hours of computer time is needed.

References

1. For a review of hyperon polarization results, see B.Lundberg, Proc. High Energy Spin Physics-1982, Ed. G.Bunce (1983).

2. For a review of magnetic moment results, see L.Pondrom, Proc. High Energy Spin Physics-1982, Ed. G.Bunce (1983).

3. For a review of magnetic moment calculations, see J.L.Rosner, Proc. 20th Int.Conf. on High Energy Physics, Ed. L.Durand and L.Pondrom (1981).

4. H.Georgi and A.Manohar, Phys.Lett. 132B , 183(1983).

5. H.Lipkin, Nucl.Phys. B214 , 136(1983).

6. C.Bernard et al., Phys.Rev.Lett. 49 , 1076(1982).

7. K.B.Luk, Ph.D. thesis, Rutgers University, 1983(unpublished).

8. A.Beretvas, private communication.

9. M.Bourquin et al., Nucl.Phys. B153 , 13(1979); M.Bourquin et al., Z.Phys. C 5 , 275(1980).

10. T.Cardello, Ph.D. thesis, Yale University, 1983(unpublished).

11. R.Rameika, Ph.D. thesis, Rutgers University, 1981(unpulished).

12. V.Bargmann et al., Phys.Rev.Lett. 2 , 433(1959).

13. M.Bourquin et al., Nucl.Phys. B241 , 1(1984).

14. S.F.Biagi et al., Phys.Lett. 112B , 277(1982).

Particle	Experiment	Exact SU(6)	Broken SU(6)	Config. mixing	Pion cloud
p	2.794	input	input	2.85	2.60
n	-1.913	-1.86	input	-1.85	-2.01
Λ	-0.613±0.005	-0.93	input	input	-0.58
Σ^+	2.379±0.020	2.79	2.673	2.54	2.34
Σ^-	-1.104±0.049	-0.93	-1.091	-1.00	-1.08
Ξ^0	-1.250±0.014	-1.86	-1.435	-1.20	-1.27
Ξ^-	-0.69±0.04	-0.93	-0.494	-0.43	-0.51
Ω^-	-2.1±1.0	-2.79	-1.840	----	----

Table 1 Baryon Magnetic Moments in Nuclear Magnetons

Particle	Yield per 10^{10} p	Average momentum (GeV)	Decay mode	Detection efficiency
π^-	1.7×10^5	350	---	---
Σ^-	2.3×10^4	400	$n\pi^-$	---
Ξ^-	2300	395	$\Lambda\pi^-$	0.16
Ω^-	16	395	ΛK^-	0.22

Table 2 Negatively Charged Hyperon Yields at 8 m away from a 15 cm long beryllium target. Production angle is 2.5 mrad with 800 GeV protons.

Particle	Yield per 10^{11} p	Average momentum (GeV)
π^-	5.6×10^7	420
Σ^-	8.8×10^6	500
Ξ^-	2.3×10^5	480
Ω^-	4.2×10^3	460

Table 3 Yields of Negatively Charged Hyperons at 6 m away from a 5 cm long tungsten target with 800 GeV protons at 0.5 mrad.

Beam Particle	Yield π^-	Σ^-	Ξ^-	Ω^-
$5.6 \times 10^7 \pi^-$	1.0×10^3	9.5×10^0	8.9×10^{-1}	1.4×10^{-3}
$8.8 \times 10^6 \Sigma^-$	2.8×10^2	5.9×10^2	7.3×10^1	1.8×10^{-1}
$2.3 \times 10^5 \Xi^-$	7.4×10^0	4.5×10^0	1.6×10^1	3.9×10^{-1}
$4.2 \times 10^3 \Omega^-$	-----	-----	-----	6.4×10^{-1}

Table 4 Negatively Charged Hyperon Yields with the number of beam particle indicated in column 1 incident on a 15 cm copper target at 5 mrad. Decay loss over 8 m has been included in the yield calculations.

LIST OF FIGURES

Figure 1. a) elevation view and b) plane view of the primary target and collimator for part 1 of the experiment. M1 is a beamline dipole magnet. M2 is a 5 meter dipole with the field in x and an aperture of 4 x 10 cm. M3 is the present 7 meter P-center hyperon magnet. The gap between M2 and M3 is 1 meter. The primary target is Be 1mm square.

Figure 2. Plan and elevation views of the collimator inside M3 for both parts 1 and 2 of the experiment.

Figure 3. Calculated momentum spectrum of Ω^- produced by 800 Gev protons on Be target for two field settings of M3. a) $\int B\partial\ell$ =23.44 Tesla-meter b) $\int B\partial\ell$ =17.58 Tesla-meter

Figure 4. a)elevation view and b) plan view of the primary and secondary targets for part 2 of the experiment. M1 is a beamline dipole used to steer protons onto target T1 in either of its two positions. M2 contains a collimator with two channels to bend Σ^- produced in T1 in a +x or -x field. The Σ^- from either channel will strike secondary target T2 at +/-5 mrad. Ω^- produced in T2 pass through the collimator in M3 which was used in part 1.

Figure 5. Calculated momentum spectrum of Σ^- produced by 800 Gev protons on T1, tungsten target, with M2 set for $\int B\partial\ell$ =10 Tesla-meters

Figure 6. Plan and elevation views of the spectrometer used in both parts 1 and 2 of the experiment. M3 is the P-center hyperon magnet. M4 and M5 are the two BM109's now in P-center. S1-S6 are scintillators. C1-C8 are proportional chambers.

Figure 7. a)Λ-K^- invariant mass plot from E620. The events have passed two cuts. First on the geometric χ^2 from fitting the charged tracks to straight lines; second on the Λ mass assuming two charged tracks are p-π^- b)Λ-K^- invariant mass plot from E620 after all cuts are made. In addition to the cuts on the Λ part of the decay, cuts are applied to eliminate events which fit $\Xi^-\to\Lambda\pi^-$, $\Omega^-\to\Xi^-\pi^0$, and $\Omega^-\to\Xi^0\pi^-$ hypotheses.

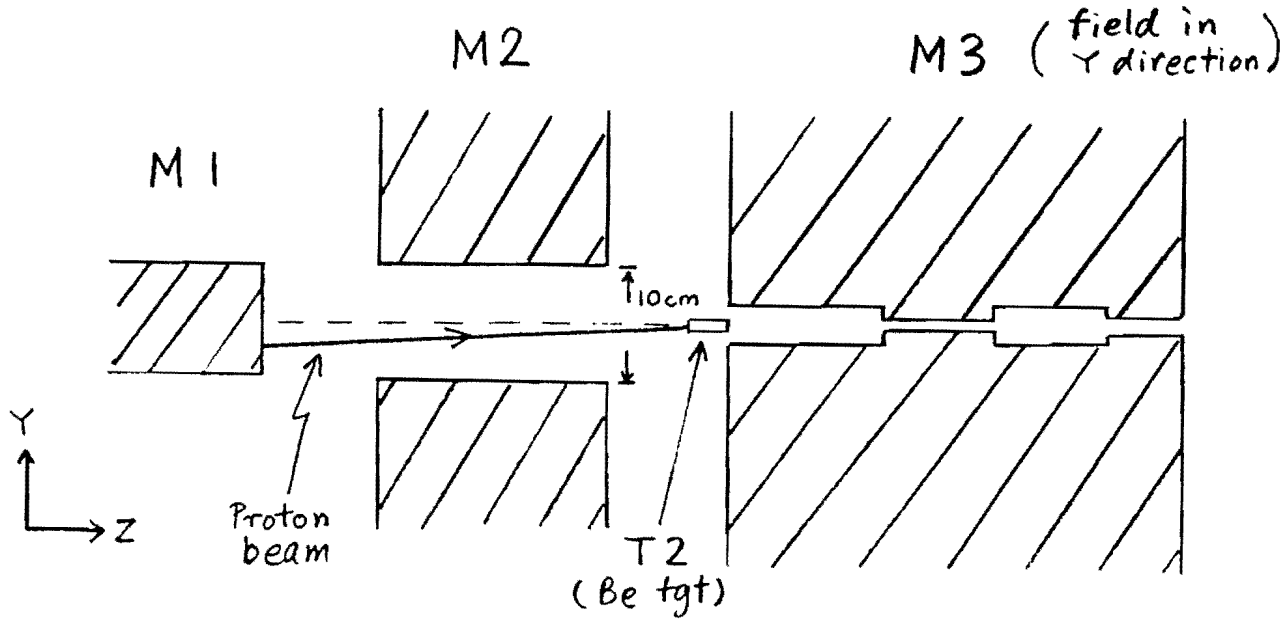

FIGURE 1a

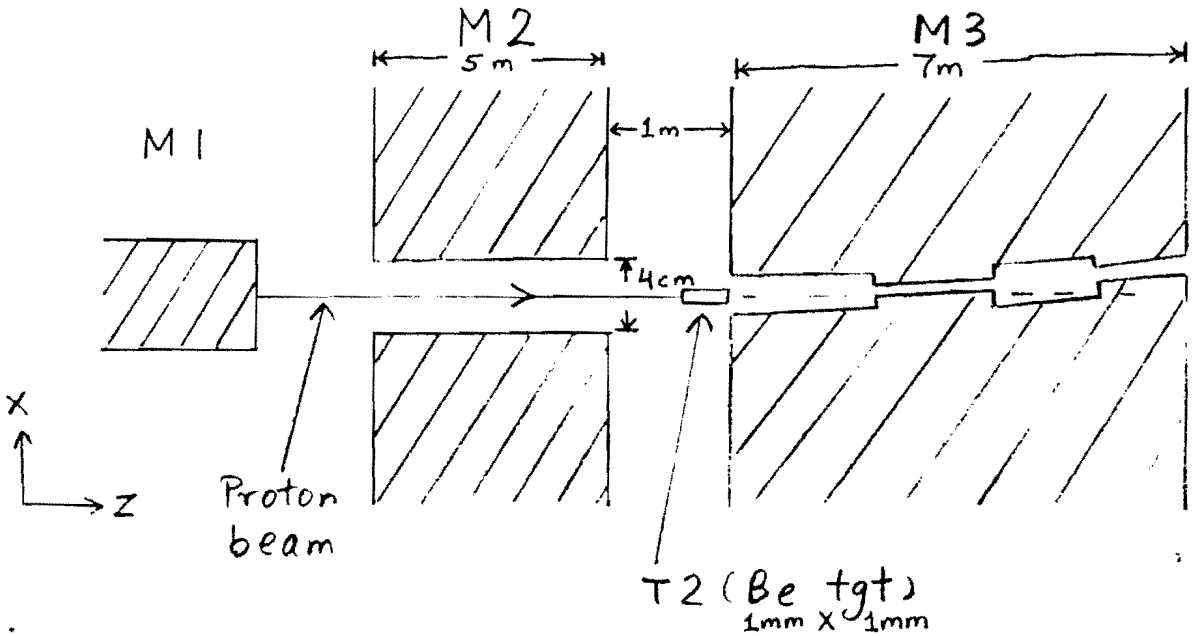

FIGURE 1b

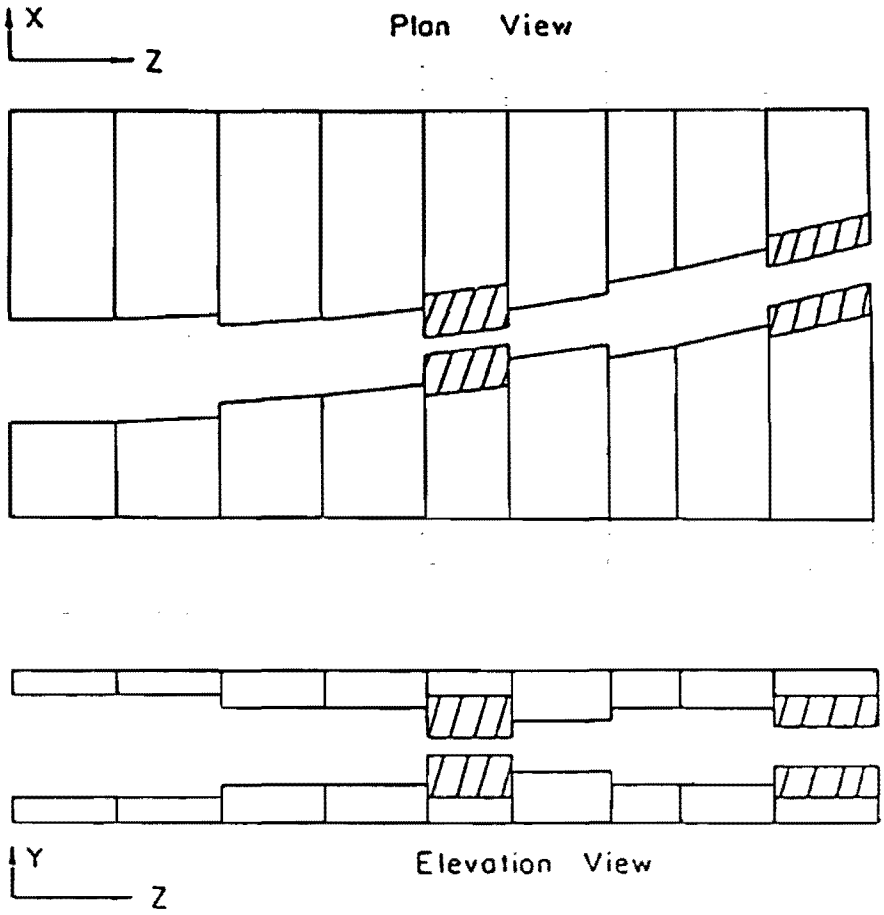

Figure 2 Plan and elevation views of the charged hyperon collimator. The cross-hatched regions represent tungsten inserts.

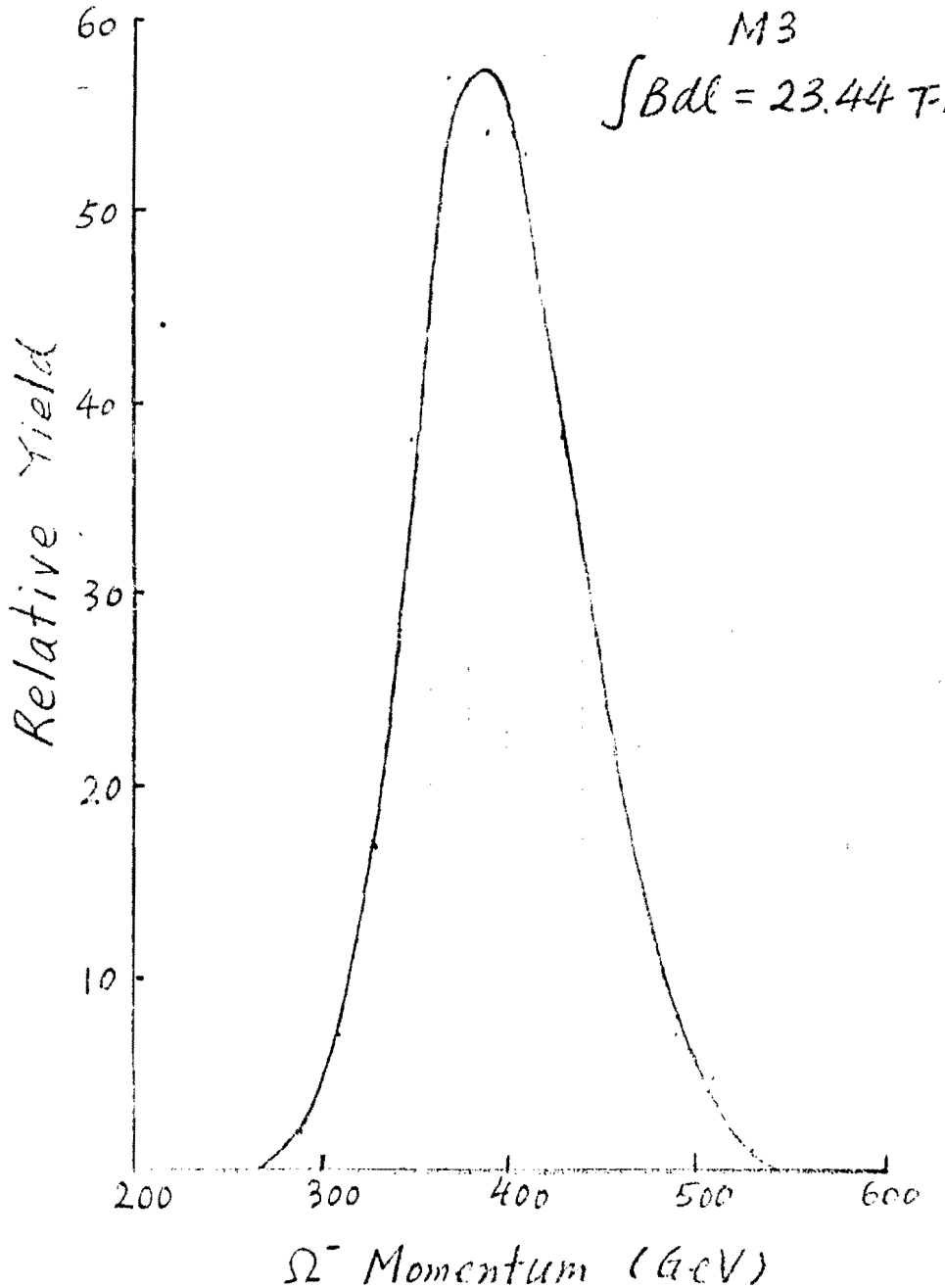

FIGURE 3a

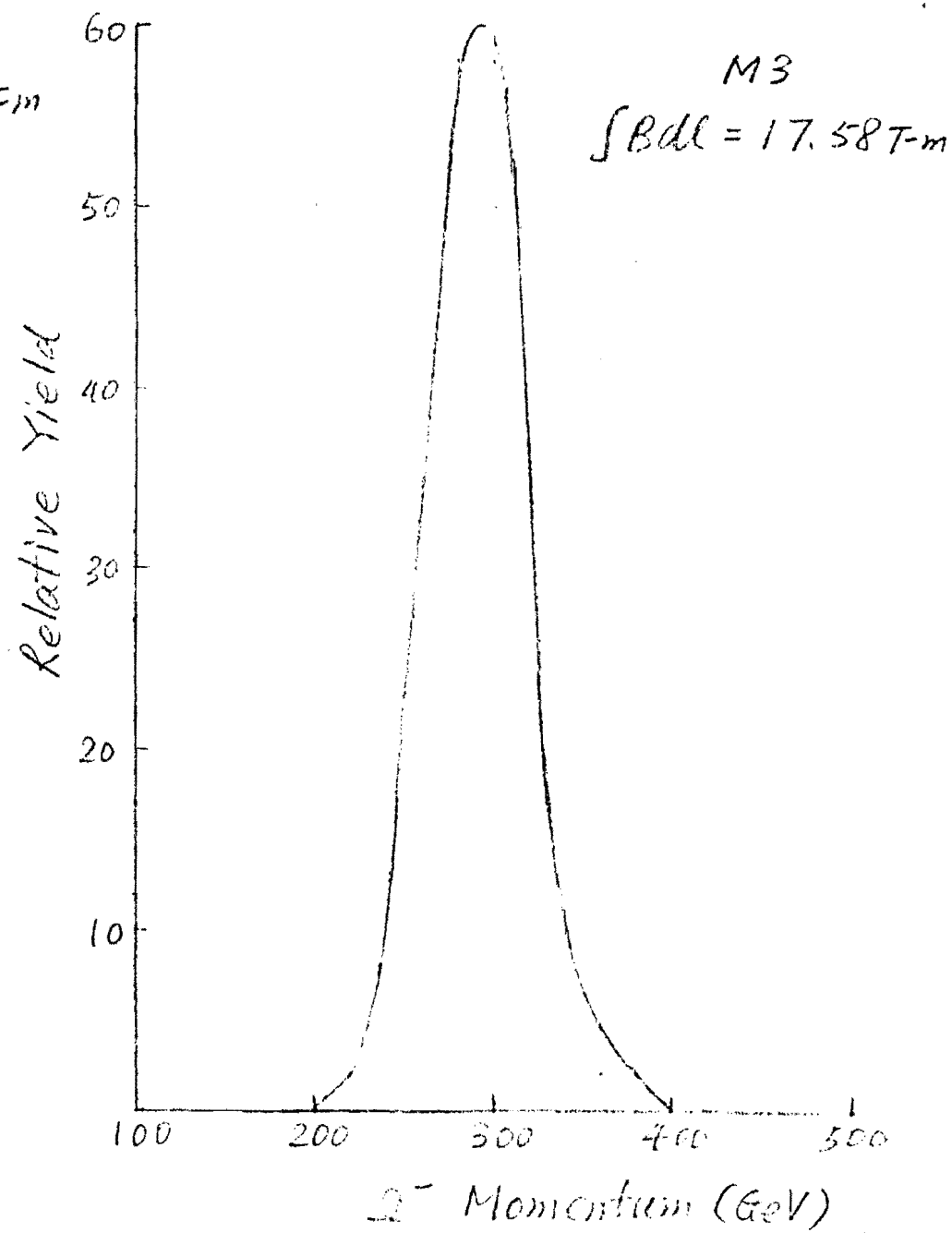

FIGURE 3b

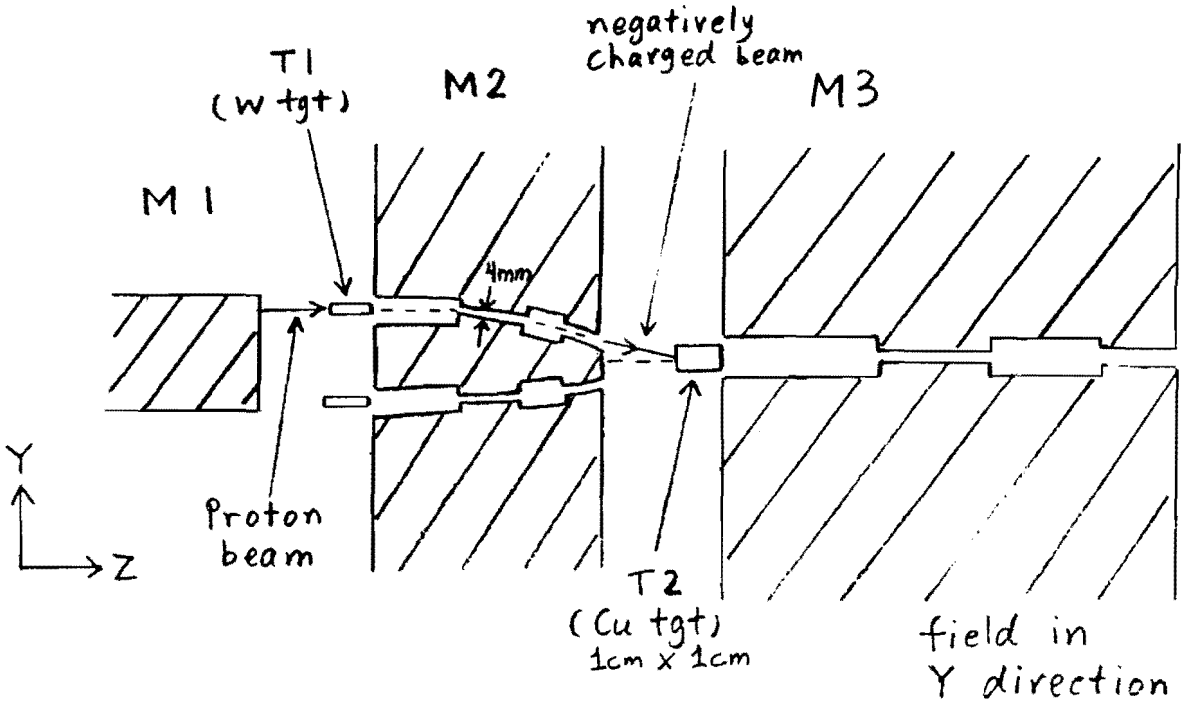

FIGURE 4a

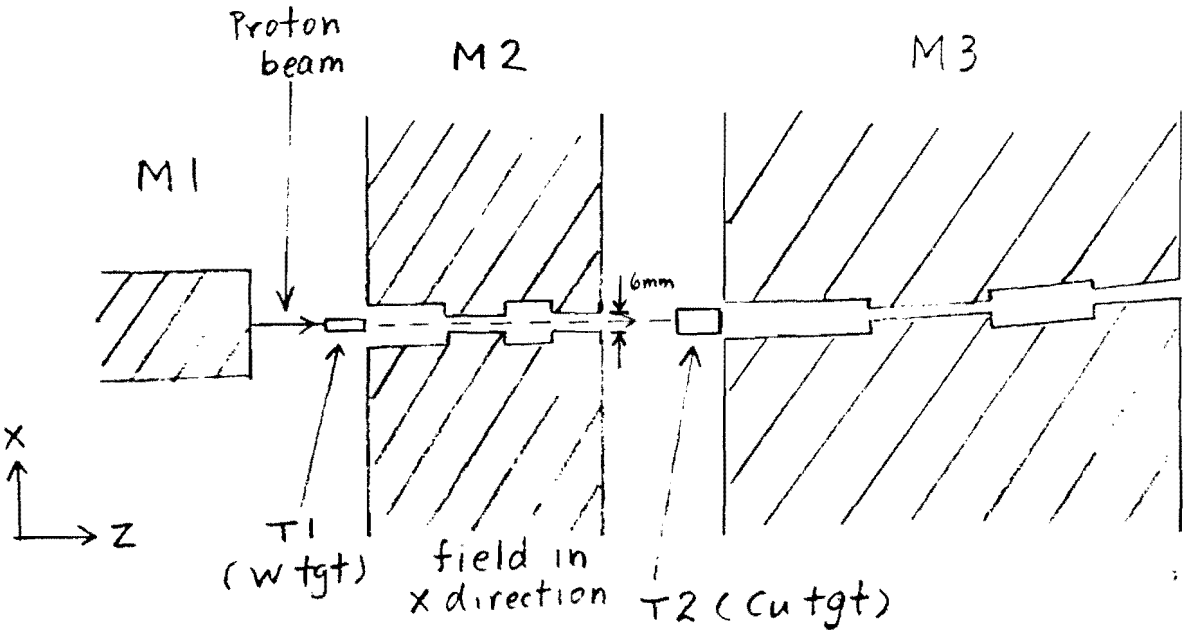

FIGURE 4b

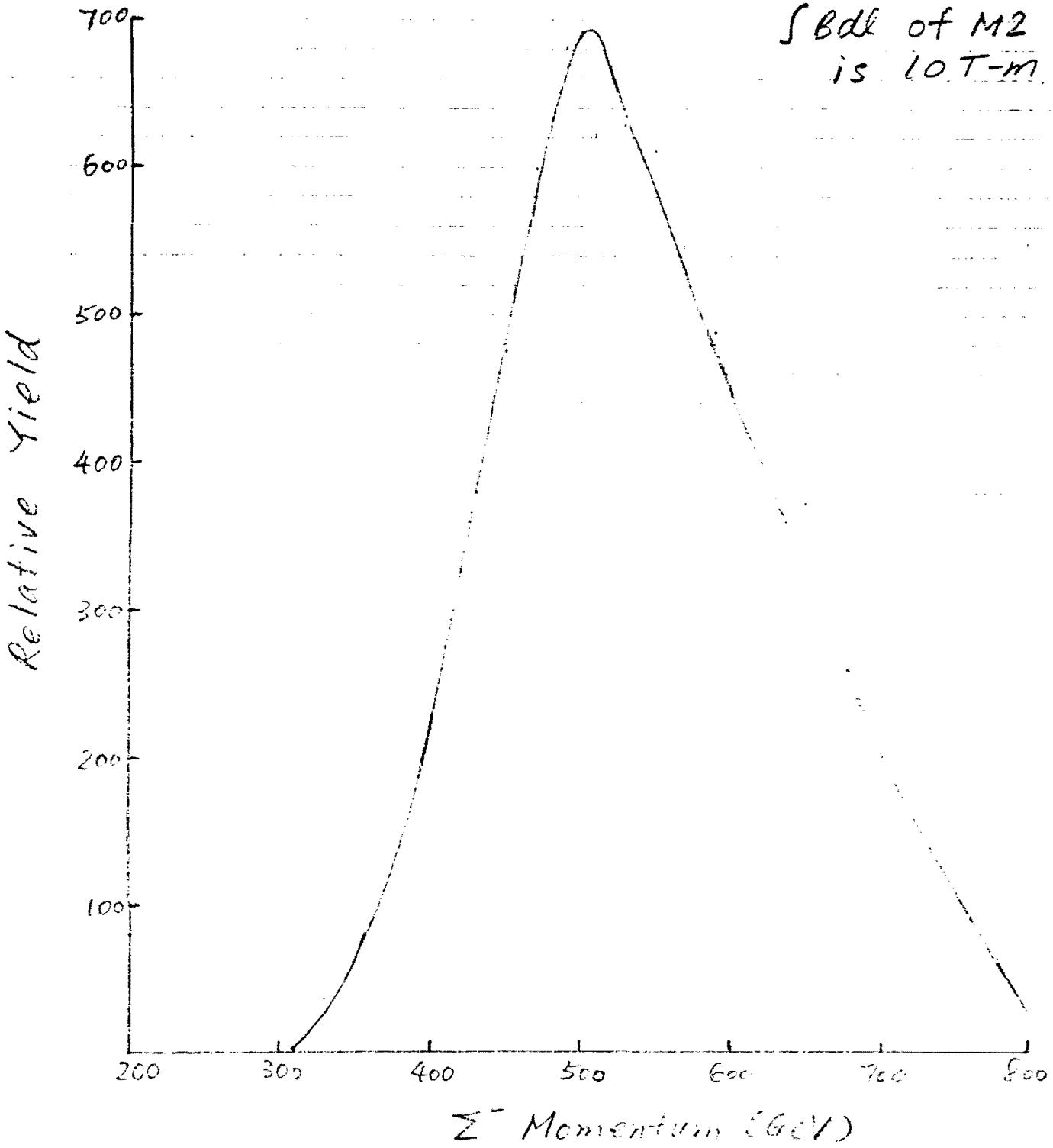
∫Bdℓ of M2
is 10 T-m
Relative Yield
700
600
500
400
300
200
100
200
300
400
500
600
700
800
Σ⁻ Momentum (GeV)

FIGURE 5

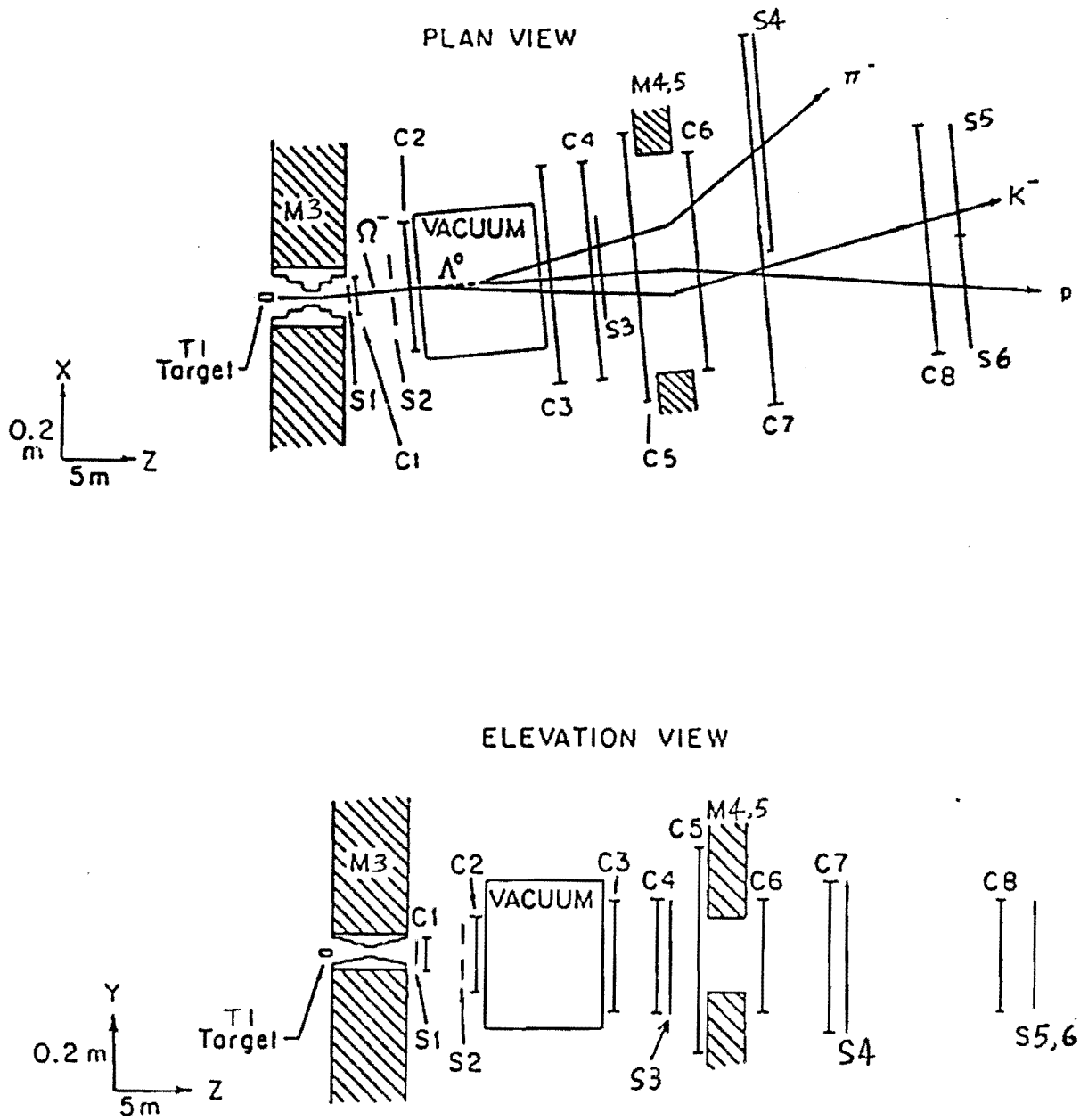

Figure 6 Plan and elevation views of the spectrometer with a typical event topology of the decay sequence $\Omega^- \rightarrow \Lambda K^-$, $\Lambda \rightarrow p\pi^-$ shown. M2-M5 are magnets, S1-S6 are scintillators and C1-C8 are multiwire proportional chambers.

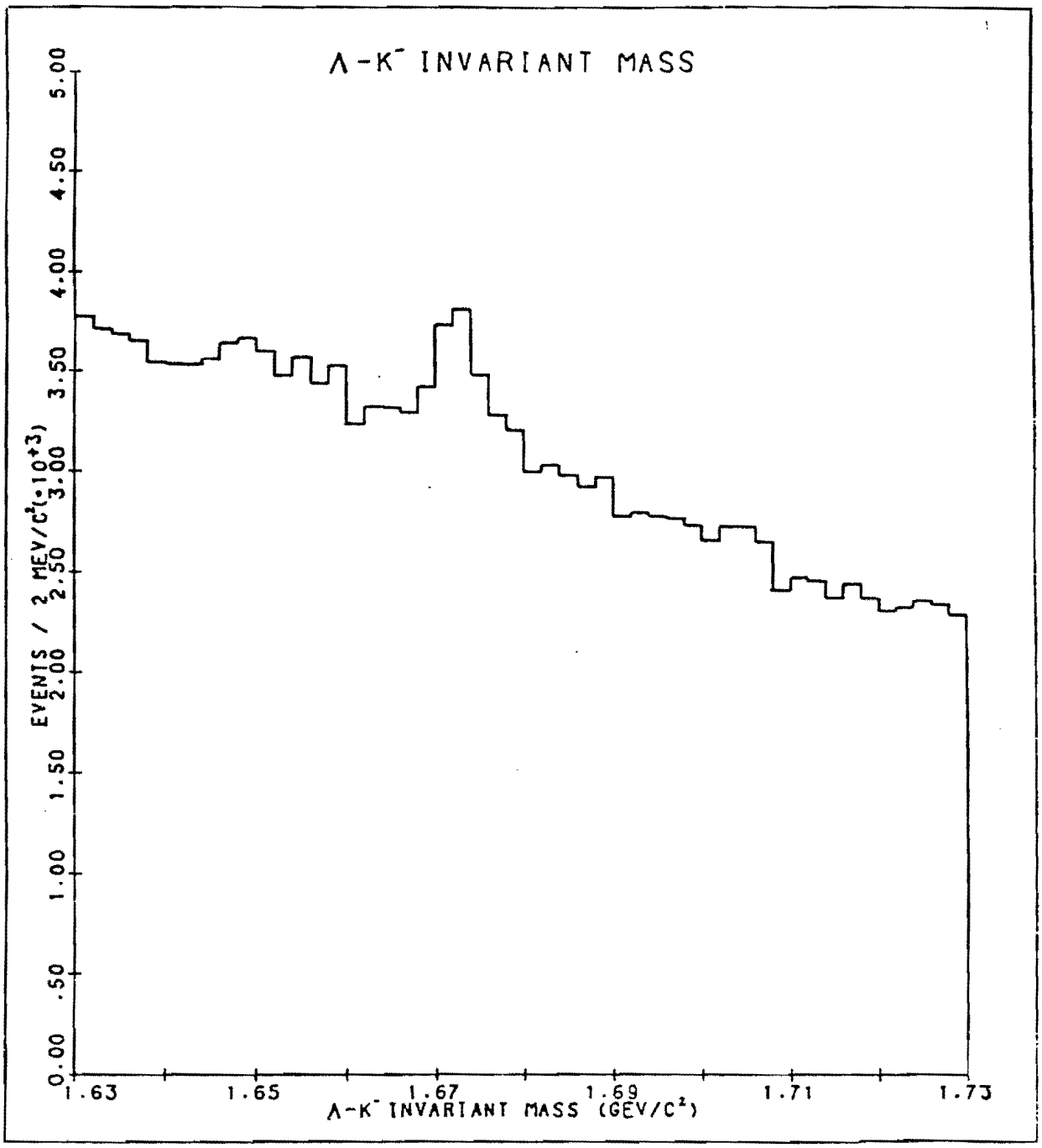

Figure 7a Λ-K^- invariant mass distribution for events with geometric χ^2 less than 100 and p-π^- invariant mass cut. The number of background events under the Ω^- peak is estimated to be about 3,200 per channel.

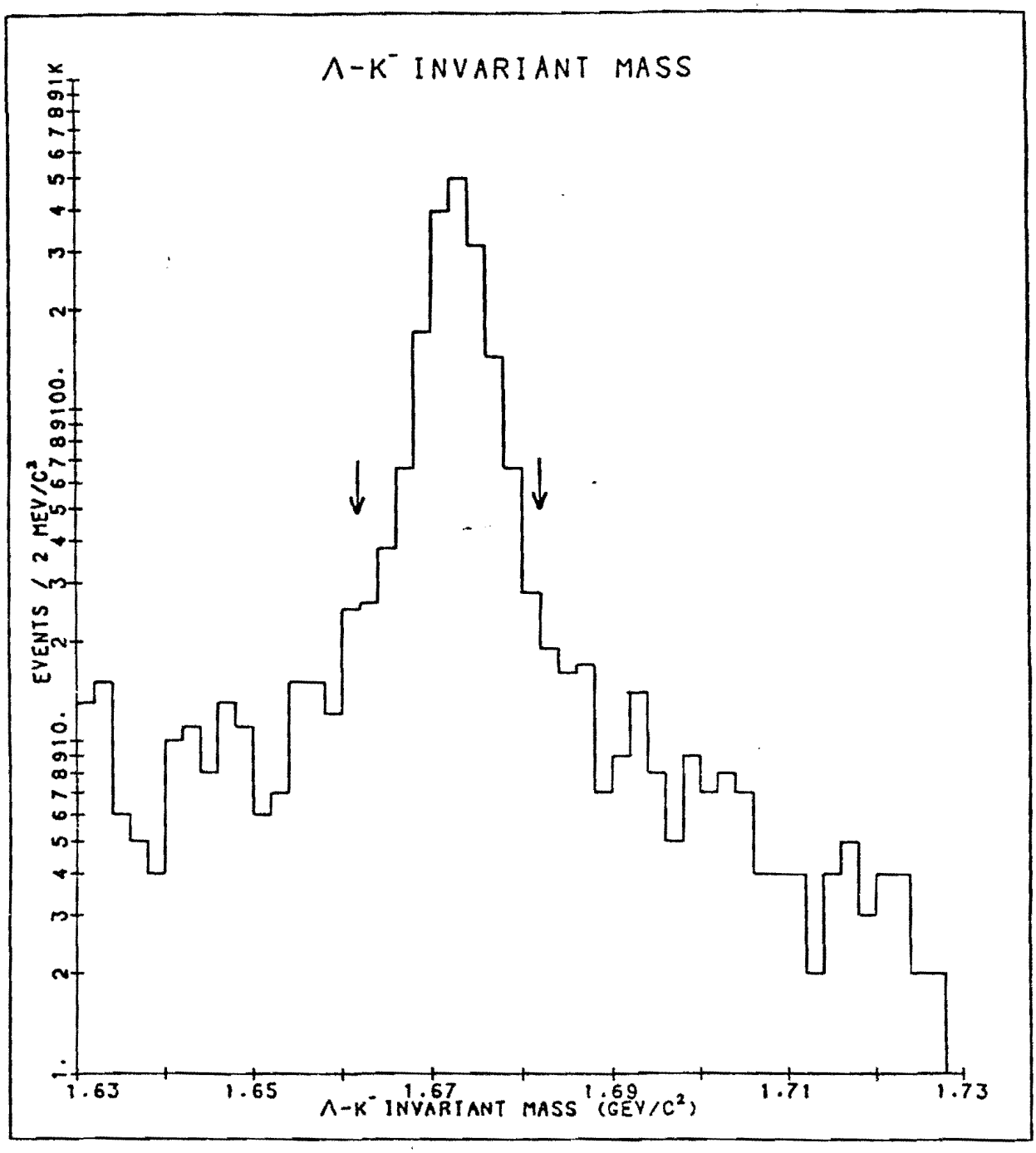

Figure 7b The distribution of the Λ-K^- invariant mass for events that satisfied all cuts but without the Λ-K^- invariant mass cut. Events outside the arrows were eliminated. Background events under the Ω^- peak are estimated to be about 10/bin. Note that this is a logarithm scale.