752
10/23/84

Proposal to Search for Anomalously Large Hadron Cross Sections at Short Distances

J. W. Cronin and B. D. Milliken
Enrico Fermi Institute, University of Chicago
5630 S. Ellis Avenue, Chicago, IL 60637

S. Dado and J. Goldberg
Technion
Technion City, Haifa, 32000, Israel

Some experiments which study heavy ion collisions have found an unexpected effect. Secondaries from these collisions show an anomalously large interaction cross section close to the primary vertex.[1] It is of interest to examine whether such a phenomenon occurs in elementary hadron-hadron collisions. Two of us (S.D.) and J.G.) have used film from the Fermilab 30" bubble chamber (Fermilab E-570) to investigate this phenomenon.

Figure 1 shows the result of this investigation. Plotted is the distribution of distance of secondary interactions from a primary proton-proton interaction at 200 GeV laboratory energy. Care was taken to remove decays from the sample. One is confident of the data, but the interpretation is not so clear since the momentum of the secondary particles is not measured. Further work is in progress to try to understand this unusual curve. Whether the interpretation is mundane, or represents some new physics is unclear.

Stimulated by the possibility that the explanation is not mundane, we propose here an experiment to investigate one of the interpretations.

There are two extreme interpretations of the data. In the first, one assumes that all the secondary hadrons are "bloated" but collapse to their ordinary state in a time 10^{-12} sec. In the "bloated" state the hadrons have an interaction cross section which is a factor 3 larger than normal. In the second interpretation one assumes that a small fraction (~1%) of the particles

produced in the interaction have an extraordinarily large cross section ~2 barns, corresponding to a mean interaction length of 10cm in liquid hydrogen.

In this proposal we concentrate on the first hypothesis since its investigation is a bit easier. An experiment to check the second hypothesis was discussed in our letter of intent. That experiment is not being proposed at the present time.

A target consisting of two 0.5"-thick slabs of beryllium is bombarded with 800 GeV protons. This target is observed at 0° production angle by a secondary beam set to accept negative particles of ~200 GeV. The zero degree angle is chosen so that one has an effective "good geometry" absorption experiment. Because of the sharp P_T fall off, outscattering will dominate over inscattering. The slabs of beryllium are placed on a stage so that their distances from a nominal center can be varied by ±1 meter. We observe the yield of secondary particles as a function of the spacing of the two targets. The targets should be separable up to 2 meters, because the mean decay length would be expected to be larger at the higher energy.

In beryllium, because of shielding effects, one expects the cross section to be larger only by a factor 2. We assume that all the negative secondary particles (mostly π^-) are "bloated" with a mean decay length d_0 such that the interaction cross section is $\sigma = \sigma_0 + \Delta\sigma\ (1\text{-exp}\ d/d_0)$, where d is the distance of travel of the particle, and σ_0 is its normal cross section. The quantity $\Delta\sigma + \sigma_0$ is the cross section of the bloated particle.

The yield of π^- from two slabs of thickness t is then given to a good approximation by

$$Y(d) = Y(o) \quad [\ 1 + \frac{Nt\Delta\sigma}{2\text{-}Nt\sigma_0}\ (\ 1\text{-exp}(-d/d_0))\ ]$$

where Y(o) is the yield at zero distance, d is the separation of the targets,

and N is the nuclear density. For $\Delta\sigma \approx \sigma_0 \approx 200$ mb one finds,

$$Y(d) = Y(o) \; [\; 1-0.016 \; (\; 1-\exp(-d/d_0) \;) \;] \; .$$

If the effect is of the size suggested in Fig. 1, we would see a change of 1.6% in the yield between targets close and targets far apart.

One might expect to see an effect from short-lived particles. If the observed π^- originates from the decay of an unstable particle, one would observe an effect if the cross sections of the parent and daughter particle are different. Also the mean decay length must be of order 1 meter. Only charmed particles satisfy the criteria and produce an effect too small to observe.

We would measure the yield from the double target normalized to a proton monitor as a function of target separation. We would change the target separation during a single spill in such a way that after many machine pulses the correlation of a given separation with a specific time during a spill is averaged out. This procedure eliminates the effects of long term drifts. We have used similar techniques in the measured of the π^0 lifetime and have measured relative yields with a precision of one part in 10^4.

In discussions with Fermilab we have identified a suitable beam, the NT beam, on the east side of the neutrino beam. Figure 2 shows a sketch of the beam and the target mechanism. The target mechanism should be in vacuum and its center of gravity should be about 1 meter upstream from the present target position.

We calculate that the acceptance of the beam up to the momentum slit is 1.9 μster-%. The yield of 120 GeV negative pions with 400 GeV incident protons has been measured at CERN[2] to be $1.51 \pm 0.09 \times 10^{-6}$ particles per proton-μster-% for a 40 mm thick Be target. Assuming scaling we find a yield of $4 \times \left(\frac{25.4}{40} \right) (1.51) \times 10^{-6} \times 10^{11} = 4 \times 10^5$ particles at 240 GeV per 10^{11} incident protons at 800 GeV. For the rest of this proposal we will assume 2×10^5 particles will be available/pulse.

We have to consider the variation of the acceptance of the beam for secondary particles as a function of position of the target. We find $\Delta\Omega/\Omega = 0.023\ \Delta R$ where ΔR is in meters. The relation is linear in the region. To first order this effect will cancel if the center of gravity of the two targets remains stationary as the separation changes.

We will have to experimentally measure the acceptance as a function of target position with a single target. The proper alignment of the beam will also be important. If the acceptance of the beam were determined by an aperture close to the target, then the variation of acceptance with target position would be unacceptably large.

We will use a telescope consisting of scintillation counters at the indicated positions in Fig. 2. Since we do not absorb any beam once it is set up, our experiment should not interfere with the two branches downstream in the NT beam. If we find a positive effect, we doubt that the resulting beam modulation will disturb any downstream users!

Figure 3 shows the pattern of modulation one might use for the target separations. This pattern would be incommensurate with the period of beam spill so that each target separation would sample all phases of the spill. The count of beam particles, the position of the target and the ion chamber charge would be read out each second along with some other scaled quantities for diagnostic purposes. We assume for each beam spill (on the average) three independent measurements of the beam to ion chamber ratio will be made for the close and distant separations of the target.

We assume a count of 10^4 particles for each interval. We assume the ion chamber has a random fluctuation of 1%, so the random error on each ratio measurement is ~1.5%. In a ten hour run the yield is measured with a precision of $1.5/\sqrt{10 \times 3 \times 60} \approx 0.04\%$. The standard error on an effect would then be $0.04 \times \sqrt{2} = 0.06$. A 3σ effect would then be at 0.17% level, which is ten times smaller than the effect of Fig. 1.

We will require considerable time for beam tuning and measurement of the acceptance as a function of position of the target. We will also want to investigate several different secondary momenta of both polarities. Overall we require 200 hours of beam time for which we have priority. Of these perhaps 100 hours would be frustrating for other users of the beam.

Once set up we assume that our work could often be done with no disruption of the downstream users providing a target of 1" of Be is sufficient.

We stress that this experiment does make demands on the Laboratory. These are:

1. Restoration of NT beam to proper alignment.
2. Ion chamber with readout of integrated charge once per second during spill.
3. Reinstallation of SWIC's in the secondary beam.
4. Cooperation in the design of a target mechanism and compatible control system.
5. Some electronics, perhaps an IBM PC with CAMAC interface.
6. Two hundred hours of priority in the beam.

We would expect to do some testing in the first part of the 1985 winter-spring running period, and data taking in the second half of the running. We would have the target mechanism ready by March 1, 1985.

REFERENCES

(1) The evidence for the effect in heavy ion collisions is conflicting. We refer to H.A. Gustafsson et al. Phys. Rev. Lett. 51, 363 (1983), and references therein. A study in 7.9 GeV/c deuteron-deuteron collisions was also done. There for negative secondaries > 1 GeV the mean free path was 212 ± 39 cm for potential paths of ~50 cm. One expects mean free paths between 320 and 470 cm. This is reported by R.L. Clarke et al. Phys. Rev. D 27, 2773 (1983).

(2) H.W. Atherton et al. CERN Report 80-07 (1980).

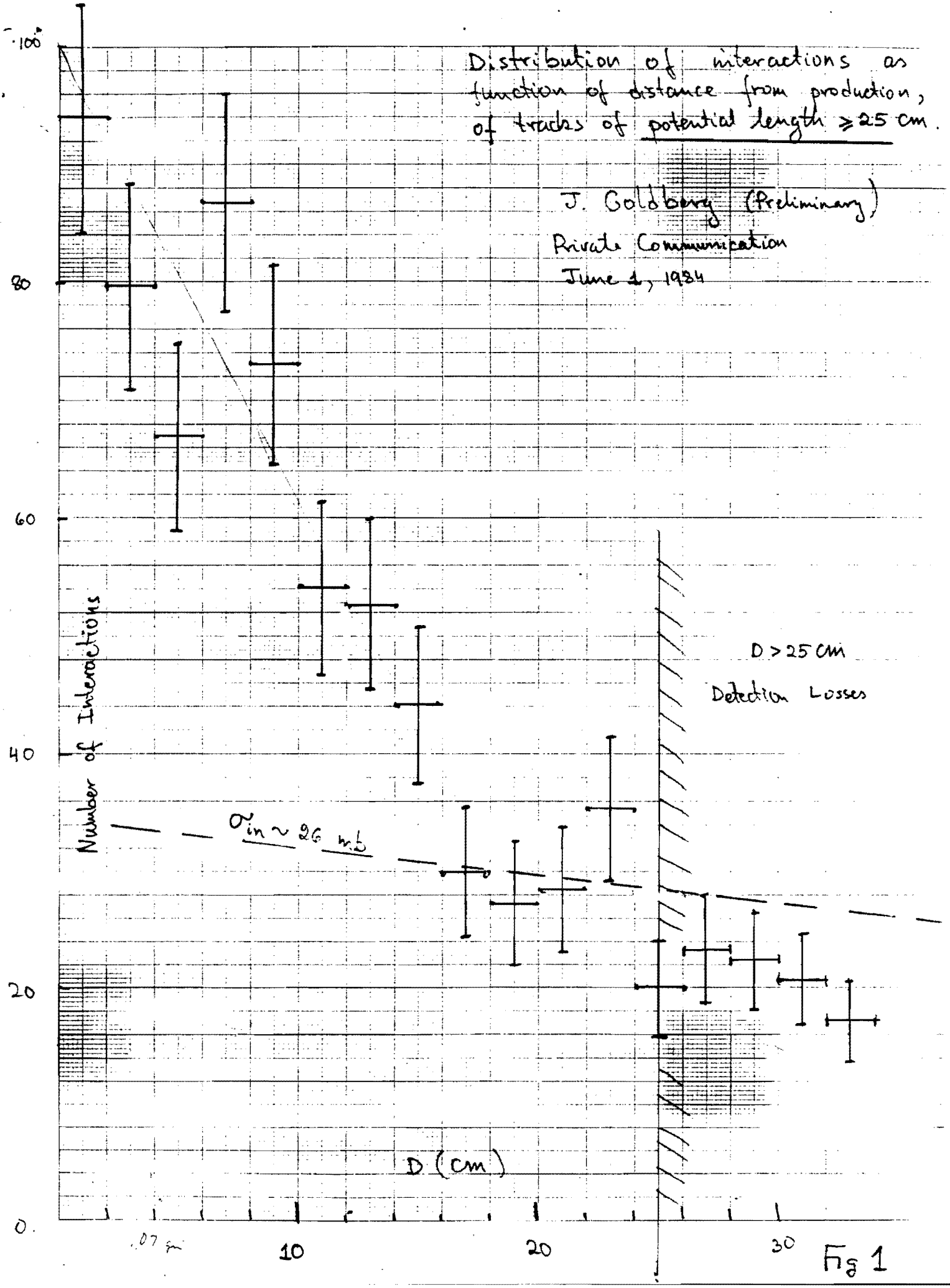
Distribution of interactions as function of distance from production, of tracks of potential length ≥ 25 cm.
J. Goldberg (Preliminary)
Private Communication
June 1, 1984
D > 25 cm
Detection Losses
$\sigma_{in} \sim 26$ mb
Number of Interactions
D (cm)
100
80
60
40
20
0
10
20
30

Fig 1

Horizontal view of NT beam

Distances indicated in meters

S_1, S_2, S_3 are scintillation counters

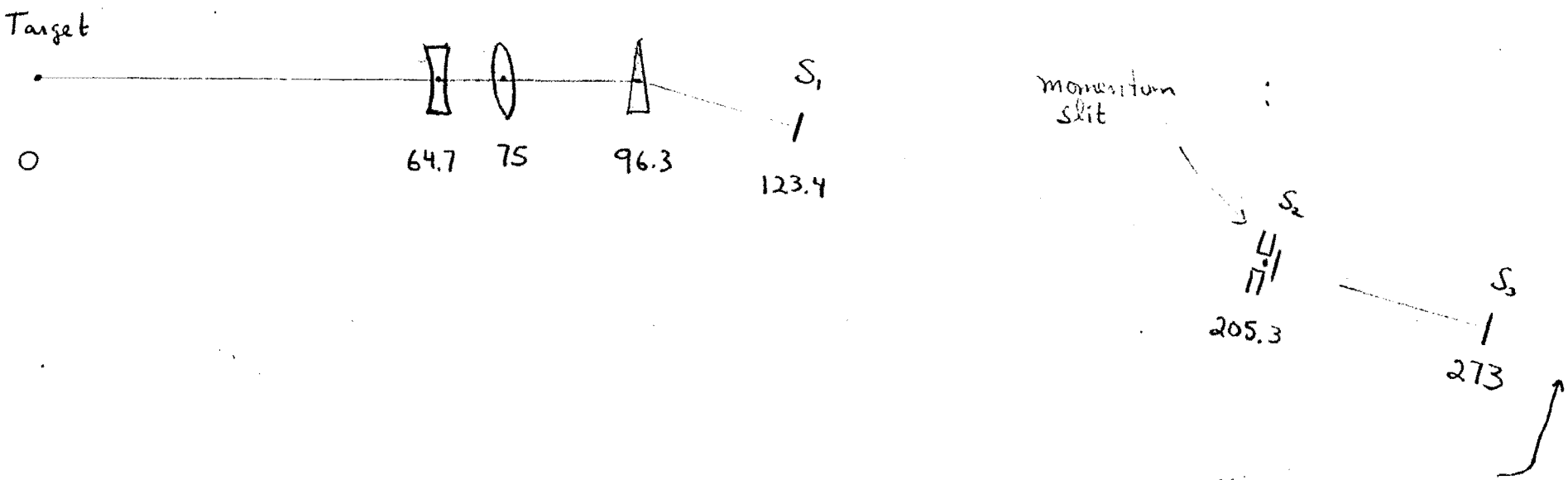

after this point the beam splits and goes to other users.

Detail of target

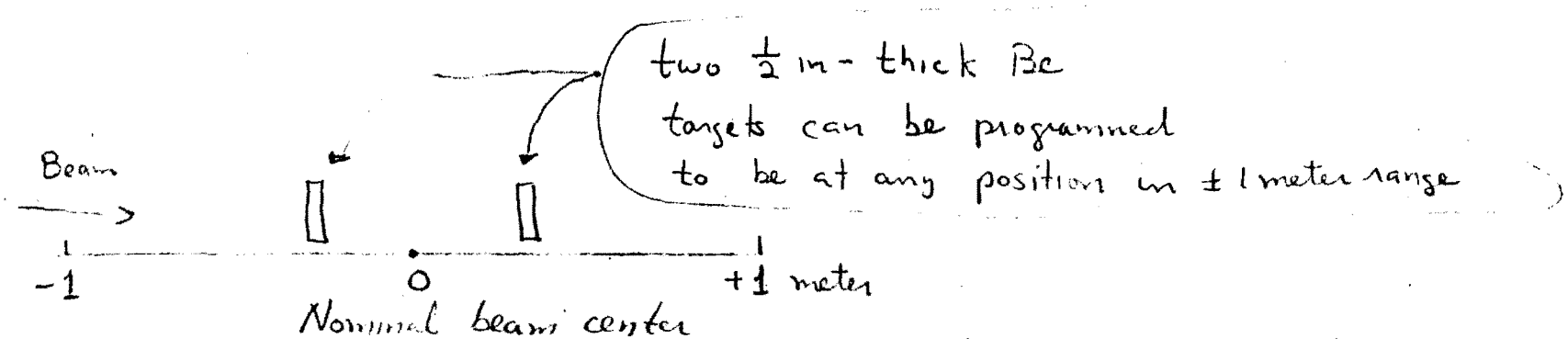

Fig 2

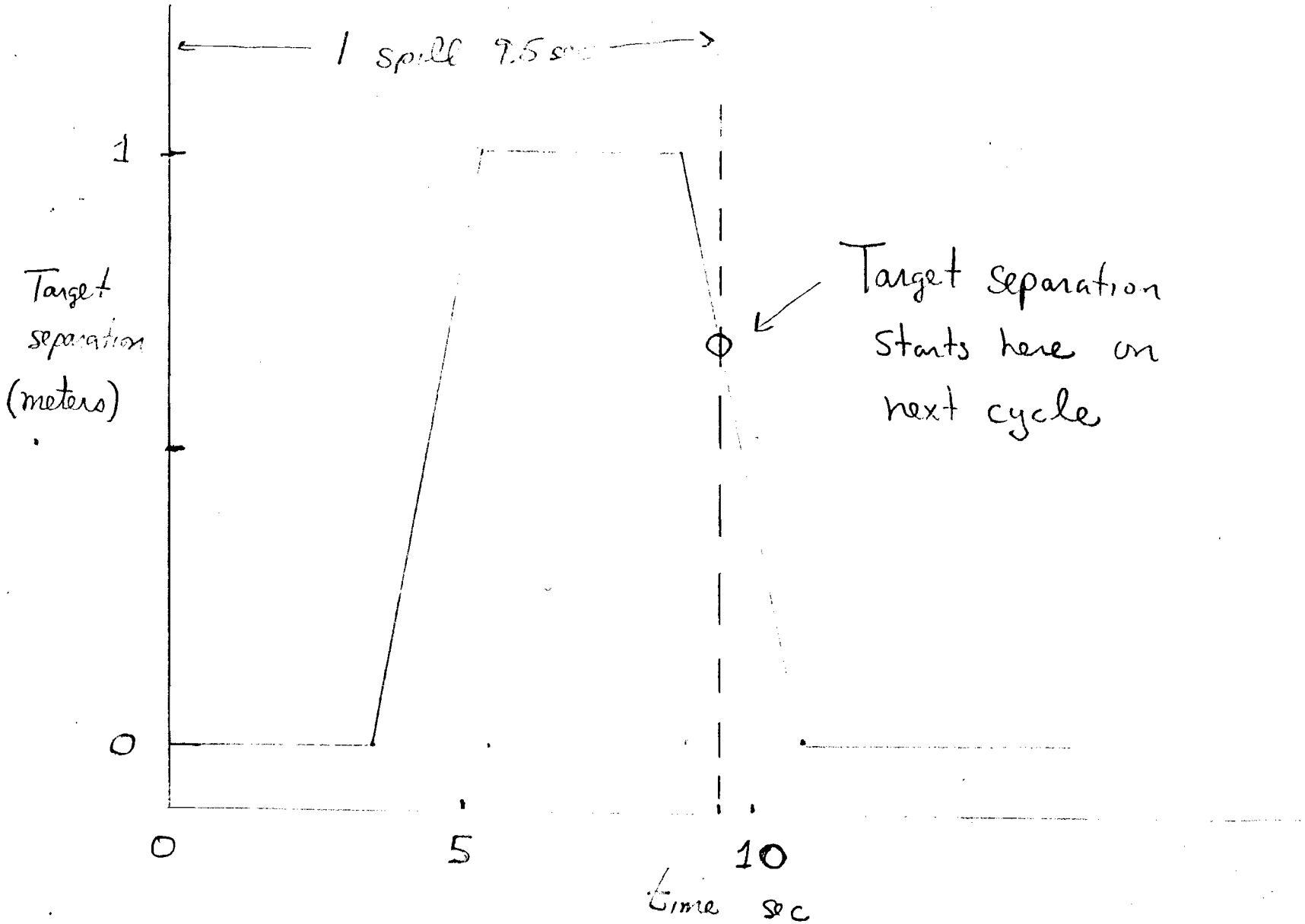
1 spill 9.5 sec
1
0
Target separation (meters)
Target separation starts here on next cycle
0
5
10
time sec

Fig 3