Measure of $|\varepsilon'/\varepsilon|$

A MEASUREMENT OF THE MAGNITUDE OF ε'/ε IN THE NEUTRAL KAON SYSTEM TO A PRECISION OF .001

G. Gollin, K. Nishikawa, and B. Winstein
The University of Chicago

G. Bock
Fermilab

B. Peyaud, R. Turlay, and A. Zylberstejn
CEN Saclay

February 1983

Abstract

In this proposal, we outline steps to be taken to perform a measurement of the magnitude of ε'/ε to a precision of 10^{-3}. We rely heavily on our experience with experiment #617 whose status we describe after a brief introduction. The construction of a new neutral beam coupled with the long spill available at the Tevatron provides a factor of nearly 6 improvement in the (hourly) kaon flux. Improvements to the detector yield another factor of 6 increase in acceptance without any sacrifice in resolution.

Scientific Spokesperson: B. Winstein (312) 962-7594

INTRODUCTION

The question of the origin of the CP nonconservation ($\overline{CP}$) observed in the neutral kaon system remains a most fundamental one. While the standard model for the weak interaction with three generations, leading to the Kobayashi-Maskawa mixing matrix, does not directly address this problem, it nevertheless provides a beautiful framework for describing the phenomenon. First, it links the question of $\overline{CP}$ with that of the non-zero mixing angles among the quarks. Second, it generalizes the phenomenon: one expects $\overline{CP}$ amplitudes in systems other than neutral kaons.

The above model (as well as any milli-weak model) provides a relation between the $\overline{CP}$ amplitudes in the neutral kaon system and it is here that we desire to continue to concentrate our efforts. Such models have $\overline{CP}$ in the $\Delta S = 1$ weak Hamiltonian and thus require that $\overline{CP}$ will be present in $K^\circ \to 2\pi$ ("direct") as well as in $K^\circ \leftrightarrow \overline{K}^\circ$ ("mixing"). The current experimental situation which we will briefly describe is, however, consistent with their being no direct $\overline{CP}$.

First we will define[1] the $\overline{CP}$ parameters ε, η_{+-}, η_{00}, and ε'. The decay eigenstates are given by

$$|K_{S,L}> = \frac{1}{\sqrt{2}} \frac{1}{\sqrt{1 + |\varepsilon|^2}} \{(1 + \varepsilon)|K^\circ> \pm (1 - \varepsilon)\ |\overline{K}^\circ>\}$$

where the mixing parameter ε is a measure of the unequal particle/anti-particle components in the states.

Re ε is directly derived from the measured semileptonic charge asymmetries in K_L decay. The phase of ε is well determined from unitarity considerations. The result is

$$\varepsilon = (2.27 \pm 0.08) \times 10^{-3}\ e^{i(43.7^\circ \pm 0.02^\circ)}.$$

The parameter η_{+-} is defined by

$$\eta_{+-} = \frac{\langle\pi^+\pi^-|H|K_L\rangle}{\langle\pi^+\pi^-|H|K_S\rangle}$$

and η_{oo} by

$$\eta_{oo} = \frac{\langle\pi^o\pi^o|H|K_L\rangle}{\langle\pi^o\pi^o|H|K_S\rangle} .$$

The magnitude and phase of η_{+-} are well determined via the time distribution of $\pi^+\pi^-$ decays in an initially pure K° beam. The result is

$$\eta_{+-} = (2.279 \pm 0.026) \times 10^{-3}\, e^{i(44.6° \pm 1.2°)}$$

We thus see that $\eta_{+-} \approx \varepsilon$. Exact equality is expected if there is no direct $\overline{CP}$ as can be seen by writing the $K_{L,S}$ states in terms of the CP eigenstates:

$$K_S \propto K_1 + \varepsilon K_2$$

$$K_L \propto K_2 + \varepsilon K_1$$

Thus if $K_2 \not\to 2\pi$, $\eta_{+-} = \varepsilon$.

When we distinguish the 2π transition anplitudes to the I = 0 and I = 2 final states, (A_o and A_2), we find that

$$\eta_{+-} = \varepsilon + \varepsilon'$$

$$\eta_{oo} = \varepsilon - 2\varepsilon'$$

where $|\varepsilon'| = \frac{1}{\sqrt{2}} \mathrm{Im}\, (\frac{A_2}{A_o})$.

The phase[2] of ε' is nearly that of ε so that we have the approximate relation

$$\left|\frac{\eta_{+-}}{\eta_{oo}}\right| = 1 + 3|\varepsilon'/\varepsilon| .$$

The standard model makes a prediction for the value of ε'/ε. However, there are major uncertainties. Calculations[3] yield results in the

range from as low as 1.5×10^{-3} to 4.5×10^{-3} although the early scenario of Gilman and Wise[4] giving significantly larger values is still viable.

From our current knowledge, we can say

$$|\varepsilon'/\varepsilon| < .05 \qquad \text{(90\% confidence, 2 experiments).}^{5}$$

If we determine an upper limit from E617, we will have

$$|\varepsilon'/\varepsilon| < .01 \qquad \text{(90\% confidence, E617 expected).}$$

Similarly for the proposed experiment,

$$|\varepsilon'/\varepsilon| < .002 \qquad \text{(90\% confidence, proposed experiment).}$$

We feel that a measurement of this sensitivity is of value independent of any model.

CURRENT STATUS OF E617

Before discussing the new experiment, we will describe the current status of the present experiment. First, we will briefly remind the reader of our main strategy much of which is taken over into the new proposal.

The E617 apparatus records kaon decays to two pions from two distinct beams simultaneously. A thick Carbon regenerator is placed in one of the beams to provide K_S decays while in the other there are only K_L's. The regenerator is alternated every pulse from beam to beam so that intensity and acceptance differences for the two beams cancel. An absorber, far upstream, also alternates from beam to beam to limit the flux of neutrons on the regenerator. We measure the quantities

$$R_{+-} = c|\rho/\eta_{+-}|^2$$

and

$$R_{oo} = c|\rho/\eta_{oo}|^2$$

where ρ is the (common) regeneration amplitude and c is a constant. Thus, ε'/ε can be determined:

$$|\varepsilon'/\varepsilon| \approx \frac{1}{6}\left(\frac{R_{oo}}{R_{+-}} - 1\right).$$

R_{oo} and R_{+-} are measured in separate runs; when R_{oo} data is taken (the majority of the time) a thin converter (see Figure 1) is placed at the downstream end of the decay region and a single photon conversion is required. A fine hodoscope determines the conversion point and the resulting e^+e^- pair is tracked in our drift chamber spectrometer, serving to determine from which beam the kaon decayed. The remaining 3 gammas are detected in a large lead-glass array (Figure 2).

The ratio R_{+-} was measured parasitically while another experiment (E613) had control of the targetting. The ratio R_{oo} was our "prime time" measurement. After some experimentation, we eventually settled on the following running configuration:

TABLE I

Intensity:	6×10^{12} 400 GeV protons
Spill:	0.85 sec every 15 sec
Targetting angle:	5 mr
$d\Omega$/beam:	4.5×10^{-8} str (4" x 4" at 1565')
Absorber:	29" Be equivalent
neutrons (calculated):[6]	0.5×10^6/beam
neutrons (measured):	~6.0×10^6/beam
	7.0×10^6/beam/sec
K_L (calculated):[6]	9×10^5/beam (50 to 150 GeV/c)
K_L (measured):	~6×10^5/beam (50 to 150 GeV/c)
K_L (measured)/hour:	~1.5×10^8/beam (50 to 150 GeV/c)

During this prime-time period, the experiment received a total of ~9 x 10^{17} protons on target or the equivalent of ~600 hours at the above intensity. Figure 3 shows $m_{\pi\pi}$ distributions from a partial data sample for the four modes, cut on P_T^2 of the kaon. We expect, on the basis of this analysis, to have the following statistics for the entire experiment:

$K_L \to 2\pi^\circ$:	3,500
$K_S \to 2\pi^\circ$:	10,500
$K_L \to \pi^+\pi^-$:	10,000
$K_S \to \pi^+\pi^-$:	30,000

Figure 4 shows a $m_{3\pi^\circ}$ mass plot; we should have about 200 x 10^3 such $K_L \to 3\pi^\circ$ decays. These are most valuable for checking the acceptance and resolution of the apparatus and they are collected simultaneously, satisfying the $2\pi^\circ$ trigger.

The drift chambers have a resolution of 220μ per plane (there are eight planes per track in the x and in the y views) over the whole chamber, and the resolution is improving as we correct for drifts in the stop-time, etc. The lead glass resolution is consistent with $\sigma/E \simeq 1.5\% + 6.6\%/\sqrt{E}$ for low energy electrons (between 2 and 8 GeV) but it is not yet understood for the higher energy gammas. As the resolution improves, we expect to see a narrowing in the mass and in the P_T^2 distributions with a corresponding improvement in background rejection.

E617 LIMITATIONS

Here we will describe the deficiencies and problems as we now see them in the current experiment. The next section will detail how we intend to deal with the problems.

The major limitation for E617 was due to the unexpectedly high neutron flux both within and around the beams. We had known of this problem previously (E533 - $\pi\mu$ Atoms) and took steps to clean up the halo with extra collimation of the beam. We also ran at a relatively large targetting angle to enhance the K/n ratio. The problem with the high neutron flux was primarily one of singles rates, especially in the drift chambers and in the hodoscope which follows the converter. Accordingly we ran with a thick Be absorber which covered both beams; the neutrons were attenuated by a factor of 11 with a corresponding loss of a factor of 3.7 in the K_L flux. (During our parasitic charged mode running, we were forced to attenuate the neutrons by 500 and the K_L's by 35.)

As it would be highly desirable to discover and eliminate this source of anomalous neutrons, we list here what we have determined from many rate studies during the setup of E617:

(1) The dependence of the anomalous rate on the addition of extra material into the beam indicated that it was due in fact to neutrons: the γ/n ratio was at most 3% (the bulk of the γ's were eliminated from the neutral beam by means of a radiator far upstream).

(2) The dependence of the anomalous neutron flux upon targetting angle (from 0.6 mr to 5.0 mr) followed very closely that expected for neutrons: both fell by a factor of about 20.

(3) Pulse-height analysis on a lead glass block placed directly into the beam indicated that the anomalous flux was soft ($\lesssim$10 GeV).

(4) The anomalous neutron flux <u>disappeared</u> when the primary beam was steered off the target.

Taken together, these findings indicate that the neutrons were low energy, were not produced in the dump, and "tracked" the secondary flux from the target with variations in targetting angle. This strongly supports the idea that they arise from the interactions of secondaries from the target. We will return to this point in the next section.

Another important limitation for E617 was our sharing a target (M - center) with two other experiments. As a result we had control of the targetting angle for only a part of the run. In addition, the target was effectively a Be "needle" which could not be oriented parallel to the beam when targetting at large angles.

Both our drift chambers and lead glass had an evacuated beam pipe through their centers which carried the n and K beam. These holes caused a significant loss in acceptance.

Finally, we draw attention to the background in the $K_L \rightarrow 2\pi^\circ$ sample in Figure 3. These are primarily due to $K_L \rightarrow 3\pi^\circ$ decays where

a) two gammas miss the detector and our anticoincidence planes

b) there are one or more gamma fusions within the detector.

This background will not be serious with respect to the current level of statistics; it will need to be reduced for the proposed new effort.

THE NEW BEAM

Our new proposal involves changes to the beam described in this section as well as changes to the detector which will be treated in the next section.

Here we will summarize the relevant properties of the new beam:

TABLE II

Intensity:	3×10^{12} 800 GeV protons
Spill:	10 sec every 60 sec
Targetting angle:	5 mr (nominal) + 1 mr, -3 mr vertical
$d\Omega$/beam:	4.5×10^{-7} str (4" x 4" at 500')
Absorber:	18" Be
neutrons (calculated):[6]	$\sim 6 \times 10^{6}$/beam
neutrons (anticipated):	$\sim 7 \times 10^{7}$/beam
	$\sim 7 \times 10^{6}$/beam/sec
K_L expected:[6,7]	$\sim 1.4 \times 10^{7}$/beam (50 to 150 GeV/c)
K_L expected/hour:	$\sim 8.4 \times 10^{8}$ (50 to 150 GeV/c)

A comparison of Table II with Table I reveals that at the Tevatron we can have an increase of almost 6 in the hourly K_L flux while keeping the <u>same instantaneous load</u> (due to the neutrons) on the apparatus.

We also note here that we would expect to see an additional factor of 2 improvement with 1000 GeV protons and a 15 sec spill.

The variable targetting is desirable primarily as a fine tune on the neutron flux. We note that the spot size needs to be 1/8" or less and that the target should be adjusted so that it is aligned with the beam for any incident angle.

In Figure 5 we indicate the likely arrangement of sweeping magnets and beam dump. Here we have a ~15 kG magnetic field for 30' followed by a magnetized beam dump into which is inserted our two hole collimator. This configuration differs in two important ways from that for E617; first, we had <u>no</u> sweeping for the first 270' of our beam line and, second, the M-center beam dump was situated 1m from the target with a "large" hole for

the M2/M3 beam. Calculation indicates that the solid angle of the collimator walls in the old configuration was 100 times that of our beam. We think that this is a likely source for the soft neutrons that bothered us: the flux of secondaries hitting the walls was $\sim 10^3$ times* the flux of neutrons in our beam whereas in the new design, this fraction will be reduced to 0.24, a factor of 4×10^3 improvement.

The actual improvement in cleanliness of beam is hard to calculate so that we have not assumed any decrease in neutron flux in preparing Table II. If this is indeed the source, we should see a dramatic improvement. There is a possible drawback in opening up the distance between the target and the dump: the longer decay path could lead to a serious muon halo problem. However it appears that with a magnetized dump, the instantaneous rate under the above conditions is $\lesssim 250$ KHz/m^2 which is certainly tolerable.

One may ask whether such a beam is really the best approach for the next generation K_L beam at Fermilab. In particular, the reader may wonder about the possibility of building a pion induced tertiary K_L beam instead of the proton induced secondary one. Indeed, since the current effort is limited severely by neutrons, it would appear that such a tertiary beam would be ideal given that a) the K/n ratio is far more favorable per incident π than p and b) the enhanced pion energies available at the Tevatron are significant in that decay experiments concentrate on "low" energy K_L's. However, in a careful study of the possibility, we found that $>10^{11}$ pions at ~250 GeV would be required to begin to approach the fluxes of Table II so that, unfortunately, the idea needs to be abandoned at this time.

*The additional factor of 10 arises from the charged secondaries.

DETECTOR MODIFICATIONS

Here we describe improvements to our detector which will provide us with a factor of 6 increase in acceptance for $\pi^\circ\pi^\circ$ decays. Figure 6 displays the main elements of our layout. Starting from the rear, we note that the lead glass array is stacked to approximate a circular array rather than the current rectangular one. (See Figure 7.) The improvement to be gained from this restacking is roughly a factor of 2. The glass has an effective diameter of about 1.7m. To take advantage of this improved geometry, there must be no other limiting apertures. Accordingly, we will require that the 100D40 analyzing magnet be opened up from a 40" gap to a 60" one. Studies indicate that this is indeed feasible and that the field quality is adequate, especially given that we require, as a result of the glass restacking, uniformity over a less extensive horizontal region.

We also note that we will remove the vacuum pipe which carried the neutron beam through the apparatus; now the beam will travel through Helium. The total neutron interaction rate will be only about 60 KHz assuming no improvement in the anomalous neutron flux. The removal of the pipe gives us another factor of 2 in acceptance.

We intend to move our regenerator and decay region closer to the lead glass by 20m. This has the effect of shifting the mean accepted momentum from 80 GeV/c down to 68 GeV/c with a factor of 1.3 increase in acceptance.

Finally, for the purposes of triggering in the $\pi^\circ\pi^\circ$ mode, and for effective calibration we are adding two "separator" magnets[8] immediately after the converter which will open up e^+e^- pairs made there. The second of these bends in the vertical direction and is used only for calibration.

The 100D40 field is chosen to reconverge the pair at the lead glass. The struck counters in banks A and B will then have a distinct topology (usually 2 counters in A and 1 or 2 adjacent in B) which is most useful in triggering. In addition, the convergence point is the same (within multiple scattering errors) as that where any bremsstrahlung photon from the converter hits the lead glass: this greatly simplifies the pattern recognition (in the glass) of the e^+e^- pair. The A and B banks allow the association of the converted photon with the appropriate cluster in the lead glass and the direction of the photon which is required to separate the beams is given by the line between the center-of-energy of the cluster and the struck element in the conversion hodoscope. This method of triggering increases our acceptance by a factor of about 1.2. In Figure 8 we show the acceptance of the new detector with respect to the old one.

We note that the neutral mode of the new experiment is to be performed without the use of any wire chambers. As this is not possible for the $\pi^+\pi^-$ mode, we plan for that running to install our drift chambers. Their aperture (1m x 2m) does not significantly restrict the acceptance for this mode. Alternatively, we are exploring the possible loan of some 1.8m diameter hexagonal MWPC's which would remain in place for both modes.

For the charged mode, the separator magnet (as well as the sweeping magnet) will be off and the lead converter removed. In addition we plan to dump the beam in our muon filter which will be plugged for the purpose. This is necessary for effective muon rejection at the trigger level.

Finally, we draw attention to the enlarged anti-coincidence planes in Figure 6. These are important in the reduction of the trigger rate and background from $3\pi^\circ$ decays.

TRIGGER RATES

Here we will list our trigger requirements and final anticipated rates. These are based upon an extrapolation from present experience and therefore are thought to be reasonably accurate.

A) Neutral mode

We demand

i) one and only one photon conversion

ii) a proper "e-pair" pattern in the A and B banks

iii) $\geq$30 GeV energy deposit in the lead glass

iv) lead glass invariant mass (derived from the second moment of the energy distribution) $\gtrsim$250 MeV/c^2

v) all anticoincidence planes in veto

The resulting rates, under the conditions of Table II with the detector as described above are:

Triggers/pulse:	~2000
$3\pi^\circ$ pulse:	~100
vacuum $2\pi^\circ$/pulse:	~2
regenerated $2\pi^\circ$/pulse:	~6

B) Charged mode

We require

i) one or two hits in the hodoscope downstream of the decay region

ii) exactly two counters in B in quadrant topology

iii) no electron: in front of B is a lead converter and we veto on large pulse-height. (This requirement also rejects $\pi^+\pi^-\pi^\circ$ decays.)

iv) no muon

We expect to run at about a factor of 3 reduction in beam intensity (since we need to dump the beam in the muon filter) and we then will have the following rates:

Triggers/pulse:	~3000
vacuum $\pi^+\pi^-$/pulse:	~8
regenerated $\pi^+\pi^-$/pulse:	~25

CALIBRATION

For calibration of the lead glass blocks, we found that removing the upstream photon absorber (which is upstream of the beam dump in the new design) and converting a small fraction of the copious gammas in the beam provided a clean source of momentum analyzed e^+e^- pairs. These pairs, however, only illuminated those glass blocks near the horizontal plane containing the beam. By energizing the second separator magnet we can illuminate the entire array. During a one day run, we can then obtain >1000 such electrons per block for calibration purposes. We plan to use our current light flasher for tracking gain charges between calibration runs. We note as well that we will collect large numbers of $K_L \rightarrow 3\pi^\circ$ events ($\gtrsim 5 \times 10^6$) which are useful for calibration. Furthermore, in a short muon run, we can determine - independently of the light flasher - gain changes at the 1% level.

RUNNING TIME, SCHEDULE, AND BEAM REQUIREMENTS

We anticipate running in the second Tevatron period, currently scheduled to begin in the fall of 1984. Since an extension to the M3 wonder building is required before we can reconfigure our detector, we request that this be completed six months ahead of beam. In addition

to the construction of the dump, beam line, and extension of the building, we would rely upon the lab for the reworking of our vacuum pipes, for the installation of the separator magnets, for the opening up of the 100D40 gap, and for construction of the regenerator mover which will be in vacuum.

This, then, is how we foresee the use of beam time.

PHASE	DURATION	BEAM REQUIREMENTS
Initial Tuneup	~5 weeks	$\sim 1 \times 10^{11}$
(During this period we would align the collimators and get the detector working including gain matching the lead glass with muons. We would also determine the thickness of the alternating neutron absorber.)		
Calibration	~1 day	$\sim 1 \times 10^{11}$
(Here we expect >1000 momentum analyzed electrons per block.)		
Charged Mode Running	2 weeks	1×10^{12}
Neutral Mode Running	15 weeks	3×10^{12}
(During this period we would collect $>100 \times 10^3$ $K_L \to \pi^\circ\pi^\circ$ decays.)		
Calibration	~1 day	$\sim 1 \times 10^{11}$
(Again we will collect >1000 momentum analyzed electrons per block.)		
Charged Mode Running	2 weeks	1×10^{12}
We expect to collect $>50 \times 10^3$ $K_L \to \pi^+\pi^-$ decays in each charged mode running period.		

SYSTEMATIC ERRORS

We have described our capabilities for collecting sufficient statistics to be sensitive to $|\varepsilon'/\varepsilon|$ in the range of 10^{-3}. This will result from

measurements of $|\eta_{00}/\eta_{+-}|^2$ to an accuracy of 1% in several different momentum bins. Because of the double beam technique, some obvious sources of systematic error are eliminated at the stage of data collection. Nevertheless, to the raw event ratios three corrections must be made which are potential sources of systematic error. These are corrections for acceptance, background(s) under the mass peak, and inelastic regeneration.

Acceptance corrections

In any momentum bin, the acceptance for K_L decays will differ from that for K_S decays by up to several percent and for this correction, we rely upon the Monte-Carlo, especially in the neutral mode where we will have the least statistics: the data do not provide a stringent test of the Monte-Carlo. Here we make a number of observations:

(i) The data for our two modes will, for the proposed experiment, be taken under identical targetting conditions so that the incident momentum spectrum can be determined from the more copious $\pi^+\pi^-$ data and "checked" with the $\pi^\circ\pi^\circ$ data.

(ii) We anticipate a 50/1 ratio of fully reconstructed $3\pi^\circ/2\pi^\circ$ decays. These provide a powerful check on the acceptance throughout the decay region for all momenta.

(iii) By eliminating the hole through the spectrometer, the acceptance criteria for an event depend exclusively upon the topology in only one plane - the lead glass. In this case, the acceptance as a function of momentum and distance from the glass "scales":

$$A(p,z) = A(p/z)$$

This relation will be broken at the percent level by energy thresholds (i.e., a photon must have an energy >2 GeV) but it nevertheless is thought to provide a useful check.

Backgrounds under the mass peak

From past experience, we expect no background problems in the charged mode. In the $2\pi^\circ$ mode, the $3\pi^\circ$ background (see Figure 3) is a potential source of systematic error. With the improved rejection of extra gammas for the proposed experiment, we expect that the "subtraction" will be on the order of 2%. We anticipate further improvement with increased understanding of the coalescence problem. In any case, we should be able to determine the background to better than 5% of itself so that no appreciable error should result.

Inelastic regeneration

Currently, we need to make a 10% correction for unrejected inelastic regeneration in the carbon. These events have a very broad P_T^2 distribution and are easily subtracted with an uncertainty of 5% or better. As the resolution in the lead glass improves, this correction will decrease. We are also taking steps to improve our inelastic rejection with more anti-counters. Since the inelastic distribution is essentially identical for the two modes, errors in the correction tend to cancel in the ratio R_{00}/R_{+-}.

CONCLUSION

We hope to have convinced the reader of our ability to extend our current experience to perform a measurement of ε'/ε to a precision of .001. The authors of this proposal are those who have contributed to and are committed to the next experiment: we have benefited greatly in our understanding of the current detector from the other members of the E617 collaboration. Upon approval, we would expect to add additional manpower. While a non zero result is by no means certain, a null result might be very hard to accomodate within the standard model.

REFERENCES AND FOOTNOTES

1. For a review of $\overline{CP}$ phenomenology and references for the measurements quoted in this section, see K. Kleinknecht, ARNS 26, 1 (1976) and J.W. Cronin, Rev. Mod. Phys. 53 (1981) 373.

2. The parameter ε' is given by:

$$\varepsilon' = \frac{1}{\sqrt{2}}\, i\, \mathrm{Im}\left(\frac{A_2}{A_0}\right) e^{i(\delta_2-\delta_0)}$$

where δ_2 and δ_0 are the S-wave π-π phase shifts in the I = 2 and I = 0 states, respectively, at the kaon mass. Experiments determining these phase shifts, referenced in K. Kleinknecht, above, yield $\arg(\varepsilon') = 37°\pm5°$. A new determination of δ_0 can be found in Biswas et. al., PRL 47 (1981) 1378.

3. L. Wolfenstein, Nucl. Phys. B160 (1979) 501.
Guberina and Peccei, Nucl. Phys. B163 (1980) 289.
J. Hagelin, Nucl. Phys. B193 (1981) 123.
In the Kobayashi-Maskawa model, ε'/ε is given in terms of the mixing angles, the phase angle δ, and certain numerical coefficients arising from QCD corrections. We have learned from J. Hagelin that a new evaluation of constraints on the unknown angles from both $K_L \to 2\mu$ and the $K_L - K_S$ mass difference might in fact favor $|\varepsilon'/\varepsilon| \approx 2 \times 10^{-4}$ in this model.

4. Phys. Lett. 83B, 83 (1979).

5. M. Holder et. al., Phys. Lett. 40B, 141 (1972).
M. Banner et. al., Phys. Rev. Lett. 28: 1597 (1972).

6. The K_L flux estimates were taken from the data of P. Skubic et. al., Phys. Rev. D18, 3115 (1978). The results have been scaled to 400 GeV/c and to 800 GeV/c. Independently, we have used a fit to the data of Atherton et. al., CERN 80:07 (1980) on K^+ and K^- production. The two

methods agree to better than a factor of two in the absolute flux and to better than 10% in the predicted improvement in yield in going from 400 GeV to 800 GeV. The calculated n flux was taken from R.T. Edwards et. al., Phys. Rev. D18, 76 (1978). In addition, the predicted neutron yields were also derived from measurements by the Michigan group, (M.R. Whalley et. al., UM HE 79-14 preprint), with excellent agreement.

7. The expected K_L flux is a factor of ~20 greater at the tevatron, per pulse, at the same neutron instantaneous rate. This can be understood simply: a factor of two arises from the increase in "central" K_L production with respect to neutrons in doubling the energy, and a factor of ten arises from the increased spill length (10 sec vs 1 sec).
8. For these magnets we have in mind two of the "Cronin magnets" which were employed similarly in E533.

Figure 1 Schematic of the E617 detector in the M3 beamline.

Figure 2 Lead glass array for E617.

Figure 3 Two pion invariant mass distribution for the four modes (partial data samples, in GeV/c^2).

a) $K_L \to \pi^+\pi^-$

b) $K_S \to \pi^+\pi^-$

c) $K_L \to 2\pi^\circ$

d) $K_S \to 2\pi^\circ$

Figure 4 Three π° invariant mass distribution.

Figure 5 M3 Target Station, proposed experiment.

Figure 6 Layout for the proposed experiment. The drawing is not to scale although the approximate locations of the major components with respect to the target are indicated.

Figure 7 Lead glass array for the proposed experiment.

Figure 8 The acceptance for $K_L \to 2\pi^\circ$ for the proposed experiment in comparison with that for E617.

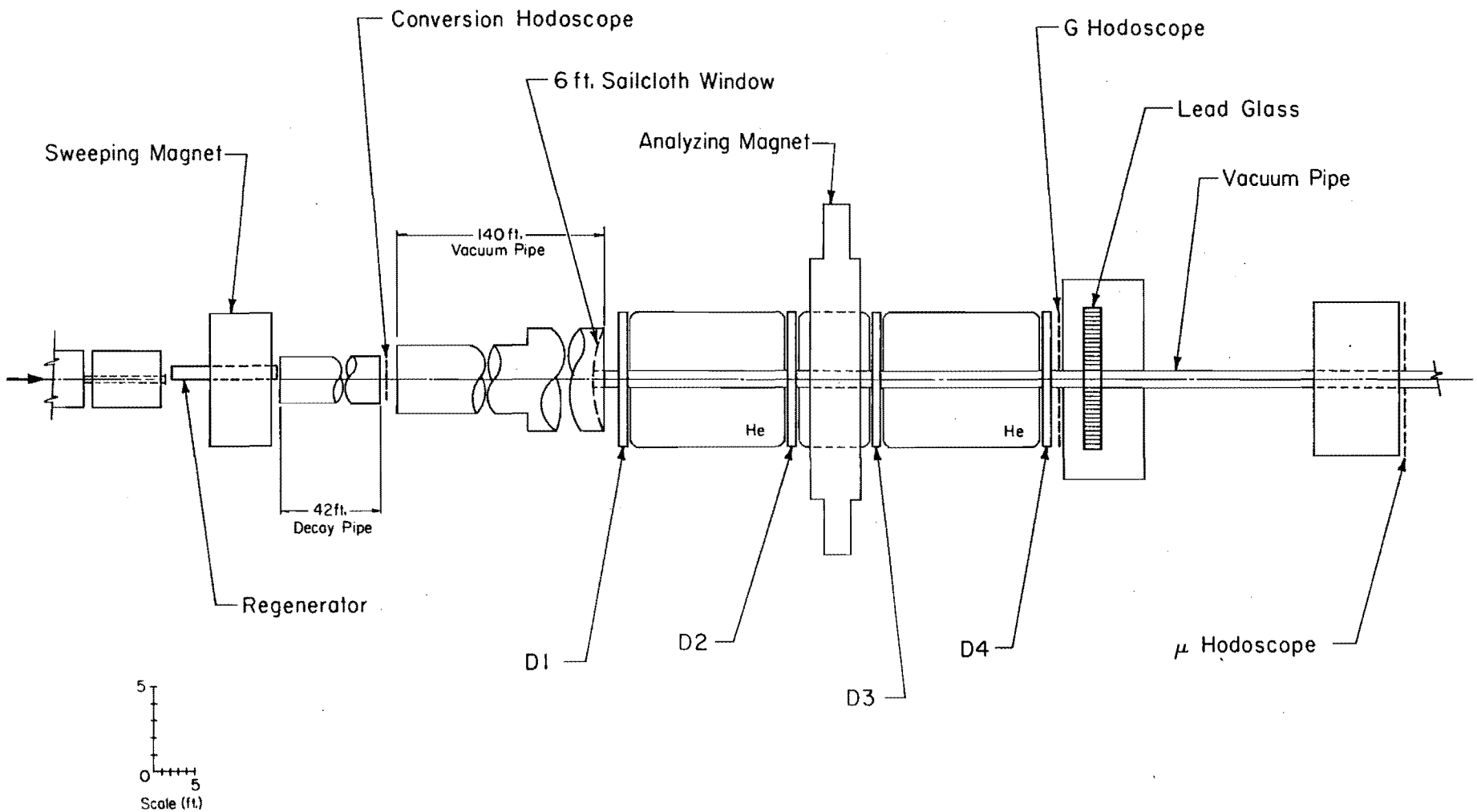
Conversion Hodoscope
6 ft. Sailcloth Window
G Hodoscope
Lead Glass
Vacuum Pipe
Analyzing Magnet
Sweeping Magnet
140 ft.
Vacuum Pipe
He
He
42ft.
Decay Pipe
Regenerator
D1
D2
D3
D4
μ Hodoscope
5
0
5
Scale (ft.)

Figure 1

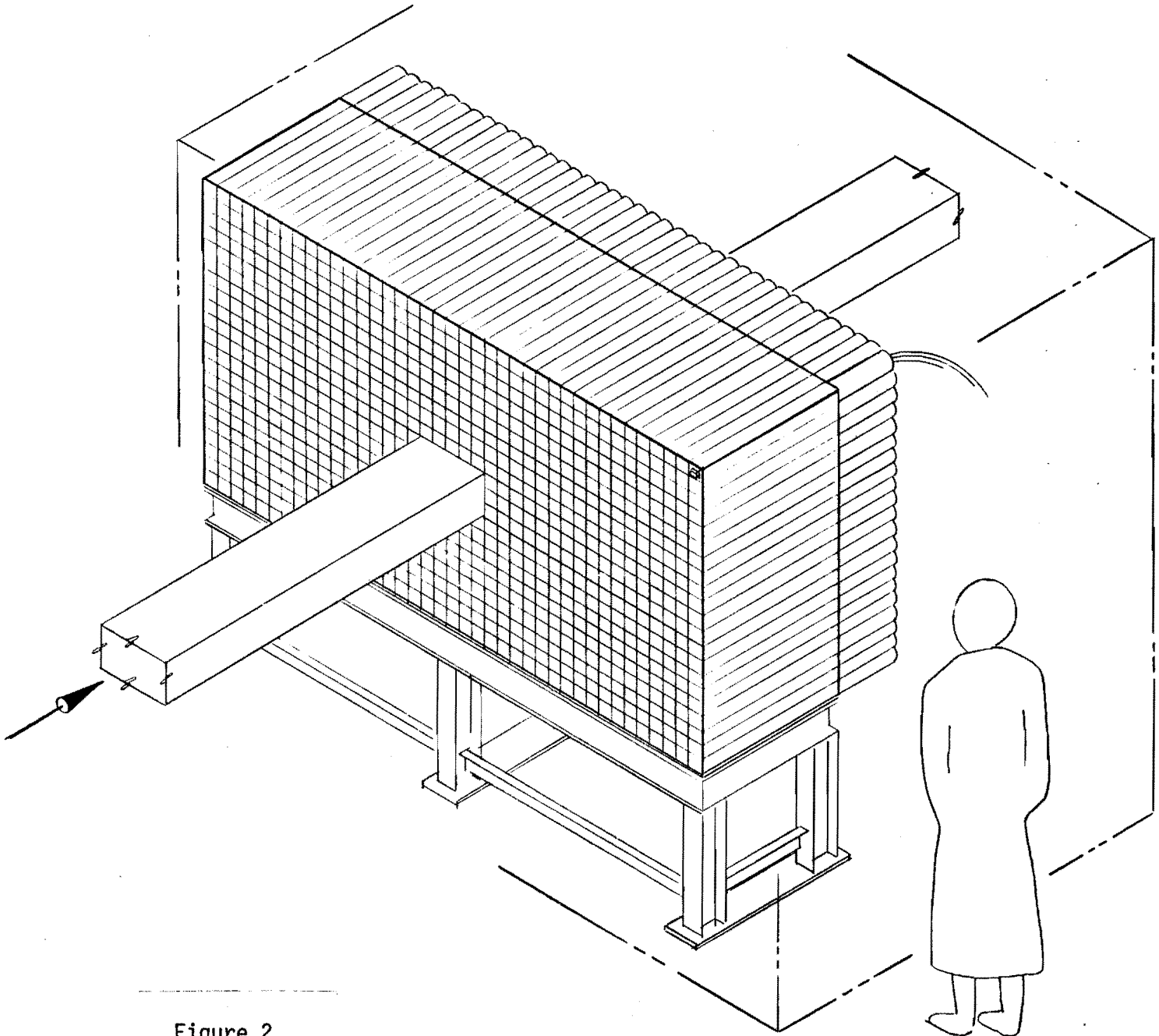

Figure 2

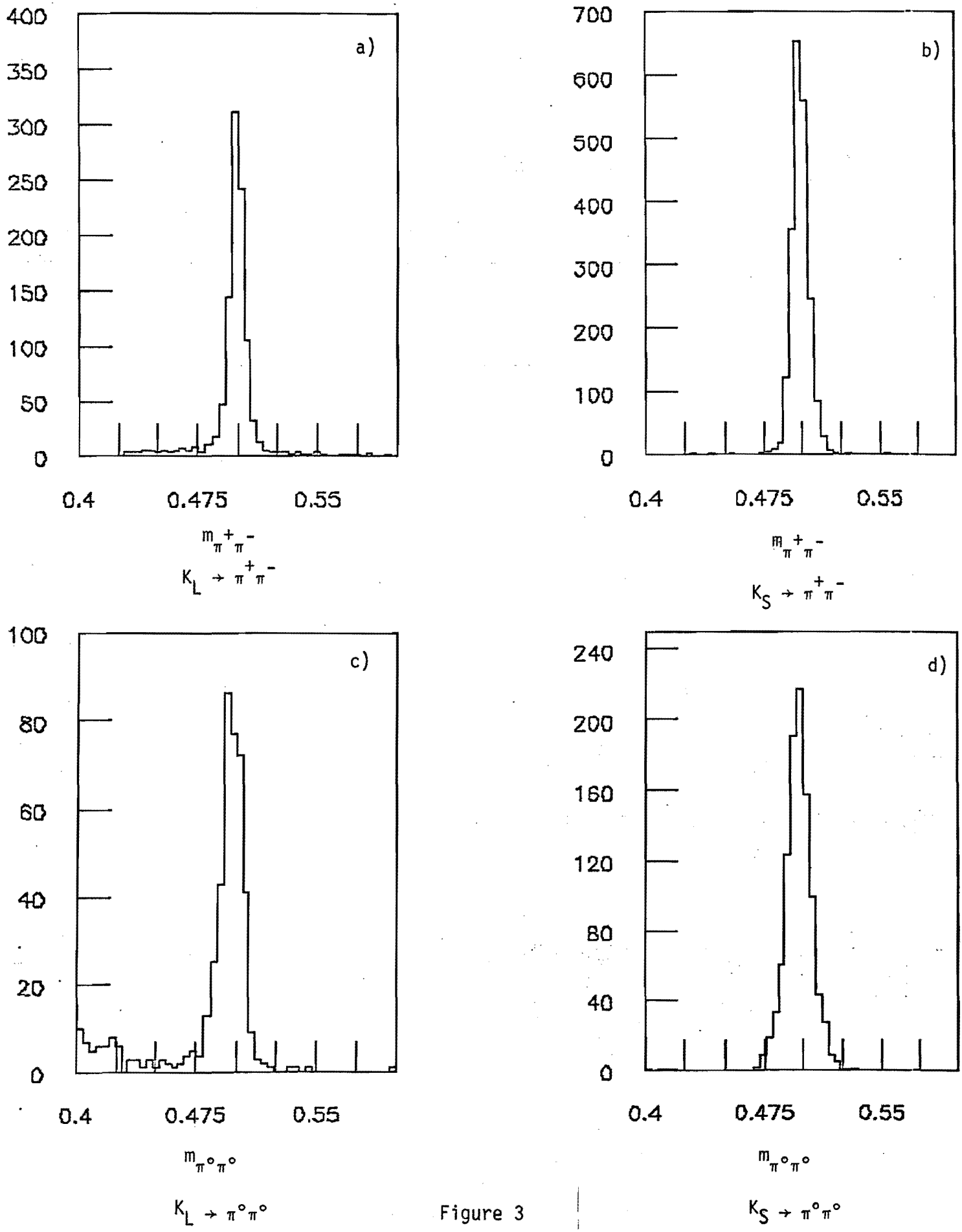
a)
400
350
300
250
200
150
100
50
0
0.4
0.475
0.55
$m_{\pi^+\pi^-}$
$K_L \to \pi^+\pi^-$
b)
700
600
500
400
300
200
100
0
0.4
0.475
0.55
$m_{\pi^+\pi^-}$
$K_S \to \pi^+\pi^-$
c)
100
80
60
40
20
0
0.4
0.475
0.55
$m_{\pi^\circ\pi^\circ}$
$K_L \to \pi^\circ\pi^\circ$
d)
240
200
160
120
80
40
0
0.4
0.475
0.55
$m_{\pi^\circ\pi^\circ}$
$K_S \to \pi^\circ\pi^\circ$

Figure 3

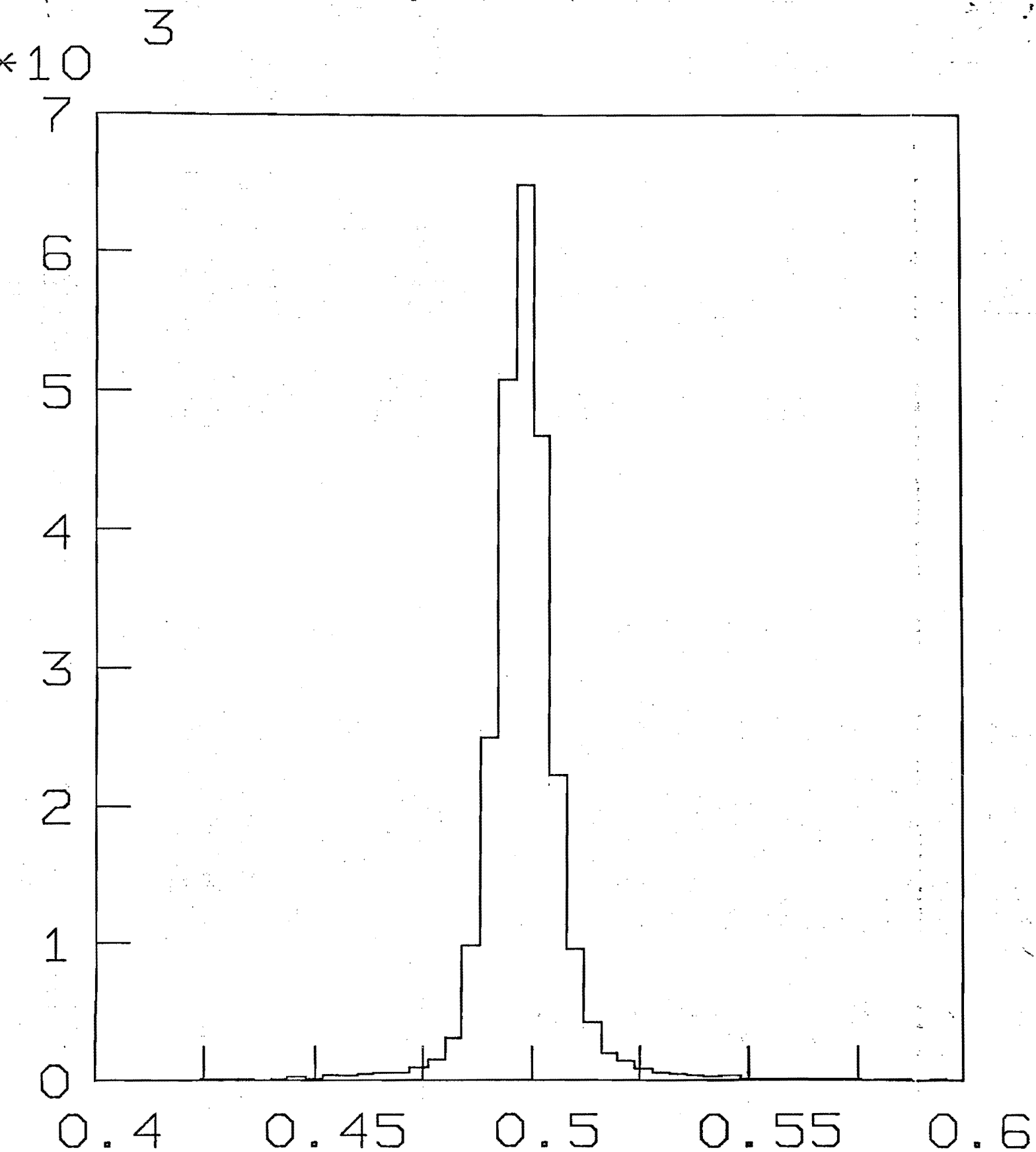

$m_{3\pi^\circ}$

$K_L \to 3\pi^\circ$

Figure 4

M3 TARGET STATION

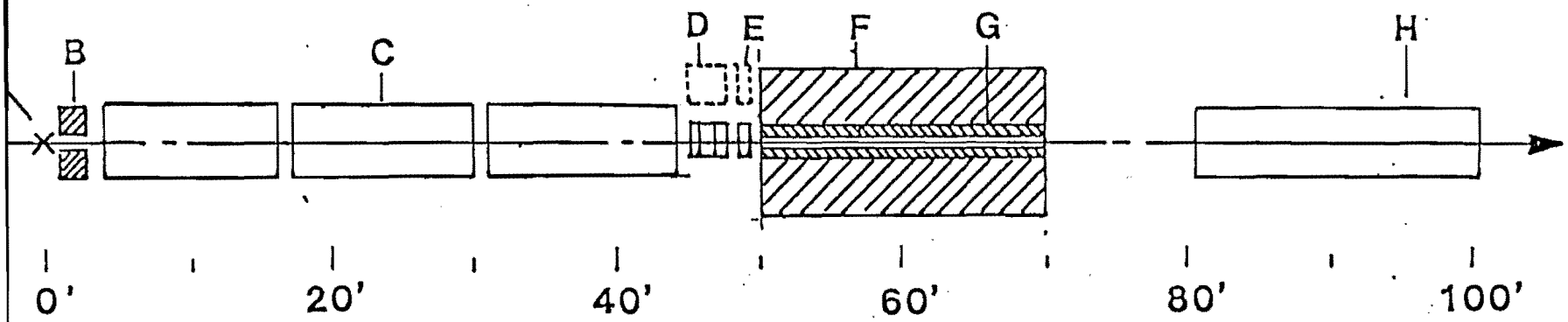

A: Be Production Target

B: Pion Absorber

C: 3 Sweeping Dipoles, 2mr at 1 TeV each

D: Remotely Insertable Be Filter

E: Remotely Insertable Pb

F: Proton Dump (20')

G: 2-Hole Insert, Defines double beam (>10')

H: B2 Dipole (Sweeper)

Figure 5

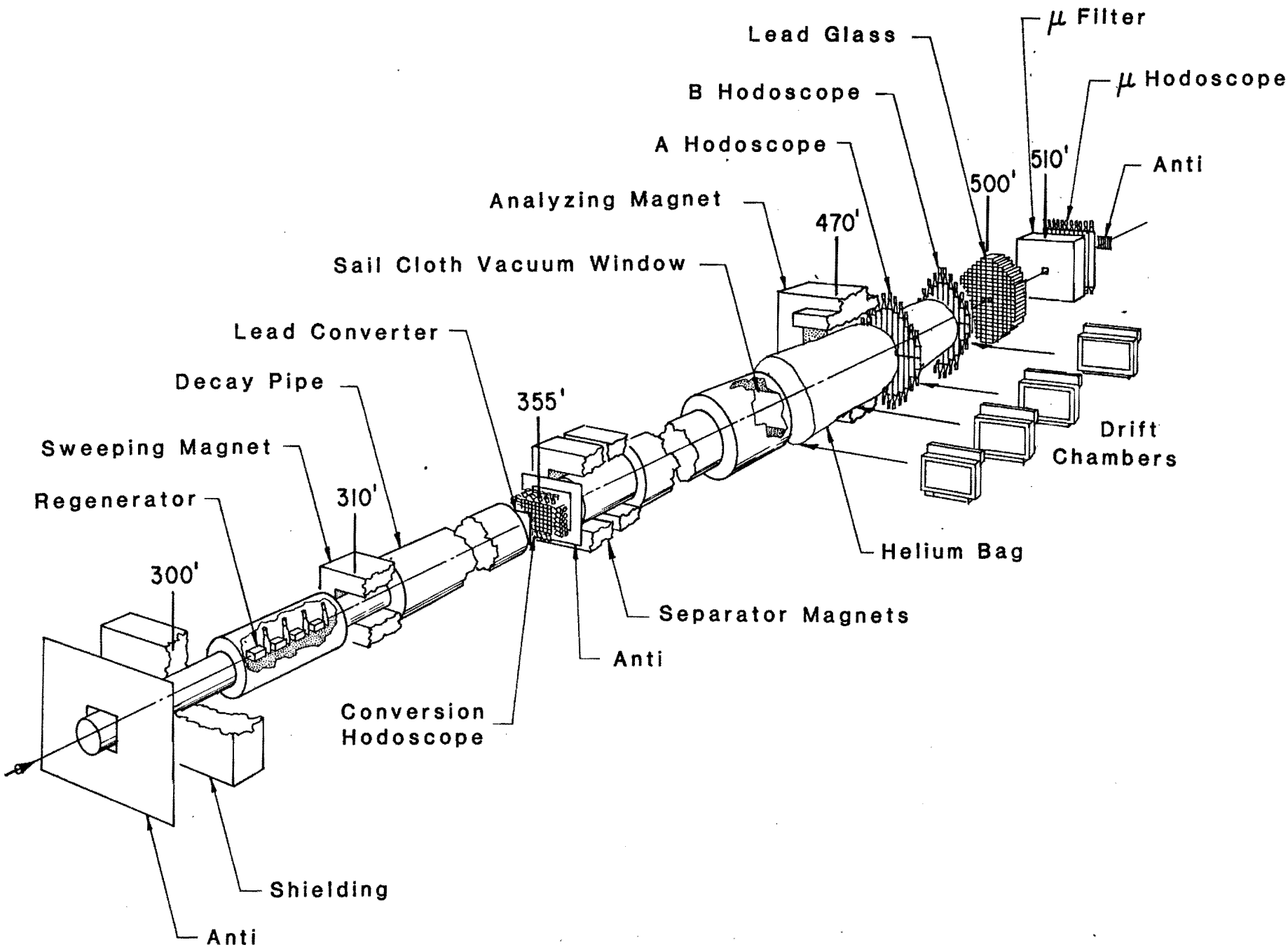
μ Filter
Lead Glass
μ Hodoscope
B Hodoscope
A Hodoscope
510'
Anti
500'
Analyzing Magnet
470'
Sail Cloth Vacuum Window
Lead Converter
Decay Pipe
355'
Drift
Chambers
Sweeping Magnet
Regenerator
310'
Helium Bag
300'
Separator Magnets
Anti
Conversion
Hodoscope
Shielding
Anti

Figure 6

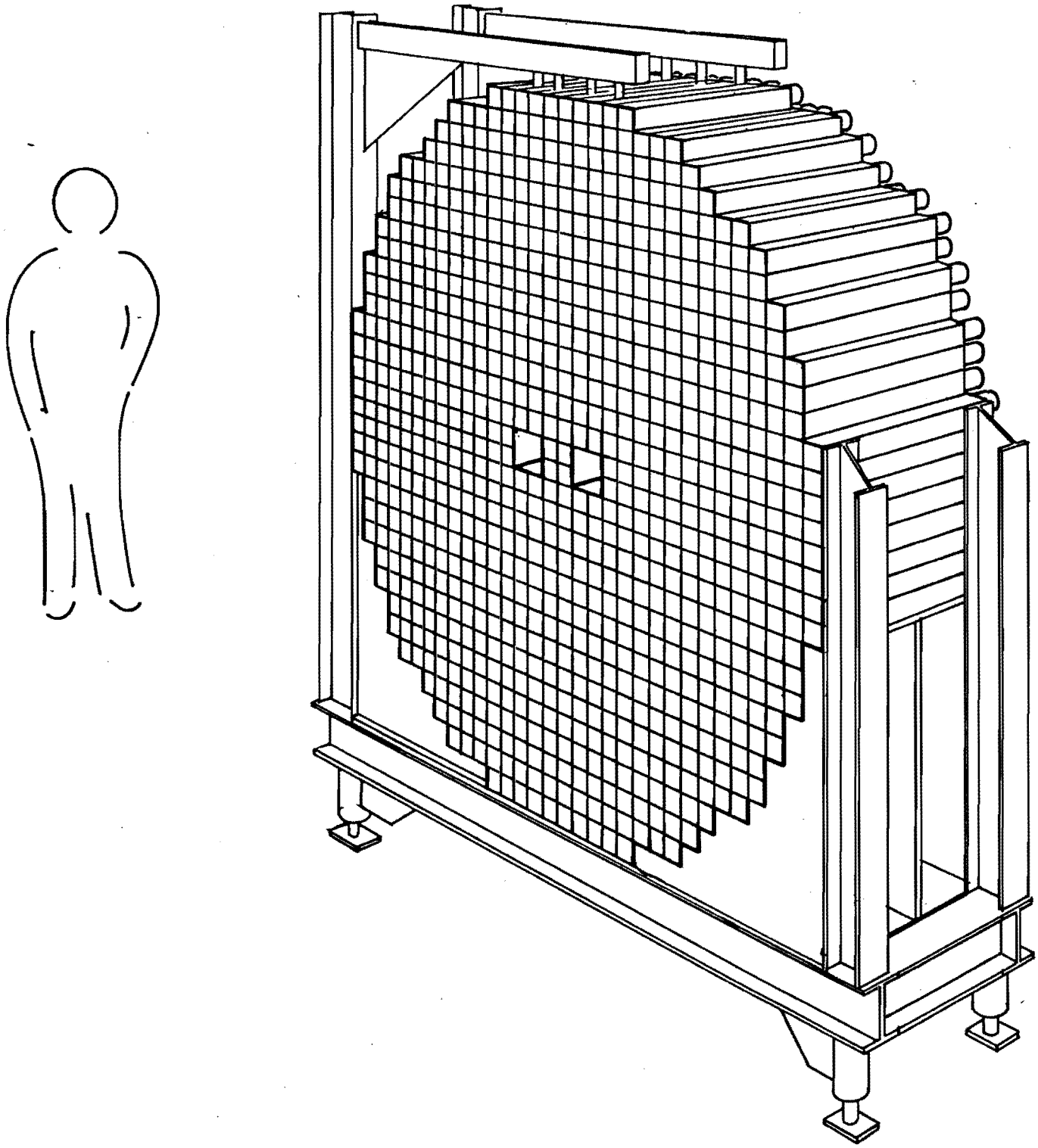

Figure 7

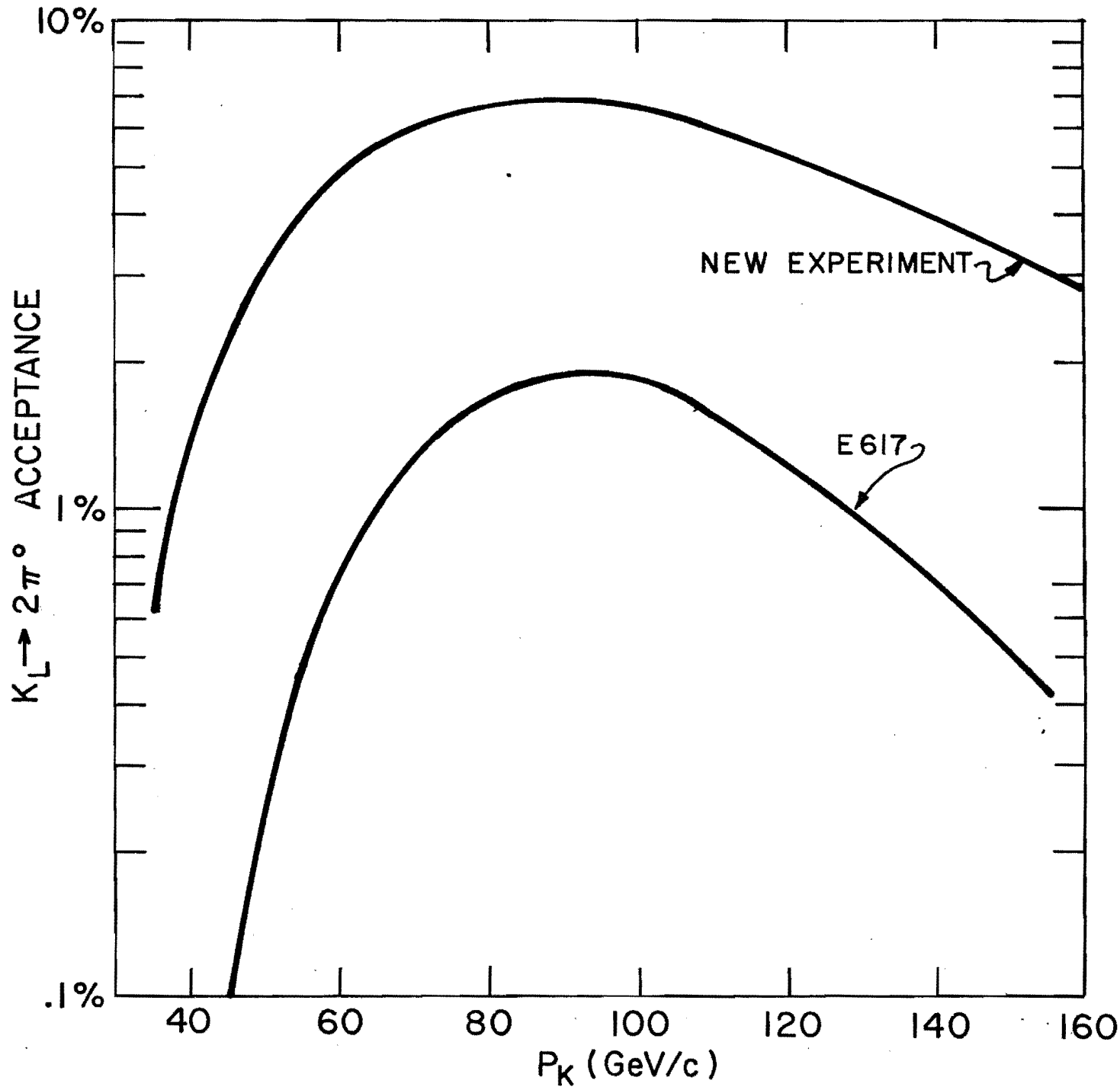
10%
1%
.1%
$K_L \rightarrow 2\pi^0$ ACCEPTANCE
NEW EXPERIMENT
E617
40
60
80
100
120
140
160
P_K (GeV/c)

Figure 8