682

Scientific Spokesman:
David G. Underwood
Argonne National Laboratory
January 29, 1981
FTS: 972-6305

Study of the p_T Dependence of $\pi^{\pm}$ Inclusive Production with a Polarized Proton Beam and Target

R. Ditzler, D. Hill, H. Spinka, R. Stanek, K. Toshioka,
D. Underwood, R. Wagner and A.Yokosawa
Argonne National Laboratory, Argonne, IL

Y. Hemmi, K. Imai, R. Kikuchi, K. Miyake, T. Nakamura,
K. Nishimura and N. Tamura
Kyoto University, Kyoto, Japan

R. Birsa, F. Bradamante, S. Dalla Torre-Colautti, M. Giorgi,
L. Lanceri, A. Martin, P. Moras, A. Penzo, P. Schiavon and A. Villari
INFN, Sezione de Trieste, Trieste, Italy

H. Aziez, K. Kuroda, A. Michalowicz, and D. Perret-Gallix
LAPP, Annecy, France

G. Shapiro
Lawrence Berkeley Laboratory, University of California
Berkeley, California

M. D. Corcoran, H. E. Miettinen, G. S. Mutchler,
G. C. Phillips and J. B. Roberts
Rice University, Houston, Texas

DIRECTOR'S OFFICE
FEB 2 1981

Summary

We propose a study of spin effects in $\pi^{\pm}$ inclusive production. This study is part of a program aimed at understanding constituent interactions. There exist QCD calculations of spin effects in some minimum and higher twist subprocesses. This experiment is exploratory to the extent that there is little data on spin effects in hard scattering.

The major technical point of the present proposal is that we trade somewhat smaller kinematic coverage for much better control and checking of systematic errors. Such checks should be an integral part of a major program of physics with a new type of facility.

Physics Objectives

Experiments done at SLAC with a polarized electron beam and polarized proton target have measured the quark spin distribution functions and shown that the quark constituents of a polarized proton are significantly polarized (see Fig. 1).[1] Some experiments to be done with the FNAL polarized proton beam or perhaps a polarized photon beam will investigate the spin distributions of gluons in the proton.[2,3,4]

We view polarization of the constituents as an extra handle in understanding the interactions among constituents. The use of polarization may be most effective in clarifying the nature of constituent interactions. In order to constrain models or theories of the basic processes, we will vary the following parameters: beam hadron spin, target spin, final particle isospin,

s, x_F, $p_\perp$. Within the same experimental set-up there are the further possibilities of beam particle vs. anti-particle, target isospin, and final particle flavor. We expect to cover $-.2 < x_F < .2$ and $p_\perp$ up to 5 GeV/c with small statistical errors.

We propose to measure the asymmetry in large $-p_\perp$ reactions from the collisions of polarized protons with polarized and unpolarized targets.

$$p^\uparrow p \rightarrow \text{single hadron} + X \quad (A_N \text{ measurement})$$

$$\vec{p}\,\vec{p} \text{ (or } \vec{d}) \rightarrow \text{single hadron} + X \quad (A_{LL} \text{ measurement})$$

We first plan to measure the spin asymmetry with only the beam polarized normal to the scattering plane:

$$A_N = E(d^3\sigma^\uparrow/dp^3 - d^3\sigma^\downarrow/dp^3)/E(d^3\sigma^\uparrow/dp^3 + d^3\sigma^\downarrow dp^3)$$

for these processes $p^\uparrow p$ (or A) $\rightarrow$ single $\pi^\pm + X$.

When both the beam and target are polarized in the L direction (longitudinal direction), we will be able to study the spin-spin dependence of the constituent scattering processes. We measure

$$A_{LL}(s, p_T, x) = E(d^3\sigma^{\rightleftarrows}/dp^3 - d^3\sigma^{\rightleftarrows}/dp^3)/E(d^3\sigma^{\rightleftarrows}/dp^3 + d^3\sigma^{\rightleftarrows}/dp^3)$$

$$= E(d^3\sigma^{++}/dp^3 - d^3\sigma^{+-}/dp^3)/E(d^3\sigma^{++}/dp^3 + d^3\sigma^{+-}/dp^3),$$

where the arrows indicate the beam and target relative spin directions, while + and - refer to helicity states.

This is part of an exploratory program in that polarization as a tool for studying constituent interactions at high energy has not been significantly exploited. Spin effects in the hadron interactions we wish to understand cannot yet be calculated in detail from first principles. Calculations within the context of perturbative QCD can however be done for many specific subprocesses. By measuring the spin effects in hadron interactions as a function of variables such as $p_\perp$, we can find the effects of such subprocesses.

As an example, the authors of Ref. 5 show that A_{LL} for the higher twist processes, $q\bar{q} \to \pi G$ and $q G \to \pi q$, has opposite sign to the fundamental minimum twist $qq \to qq$ scattering and different $x_\perp$ dependence $\left(x_\perp = \frac{2p_\perp}{\sqrt{s}}\right)$.

Figure 2 shows the expected value of A_{LL} for π^+, π^-, π^0 and jet production calculated in Ref. 8,9 on the basis of minimum twist $2 \to 2$ constituent scattering. This calculation uses the Carlitz-Kaur spin distribution[11] functions for the proton which are in agreement with the polarized e-p data of Ref. 1.

First order QCD calculations have been done for asymmetry in inclusive production with both polarized beam only and with polarized beam and target.[6-10]

The experimental measurement of inclusive one-spin asymmetries provides an important test of the hard-scattering factorization expansion and a test for a single vector exchange hard-scattering model.[8] If large single-spin effects are observed, the interaction cannot be represented by single vector exchange. A sizeable asymmetry effect is observed at CERN in π° production by

24-GeV/c protons at $x \approx 0$ and $p_\perp$ of 2 to 3.[12] Large polarization (on the order of ~ 30%) is also observed in inclusive Λ° production at $p_\perp$ of 1 to 2 GeV/c by the interaction of 20- to 400-GeV/c protons on an unpolarized target. It is important to extend these measurements to larger $p_\perp$ and to other processes.

Choice of Reaction

The physics to be gained in a $\pi^\pm$ asymmetry measurement may be complementary to the physics from a similar jet inclusive measurement if jet production is dominated by q-gluon scattering and single π production is dominated by qq scattering.[13,14]

From an experimentalists point of view, this $\pi^\pm$ measurement has many qualities to recommend it. First, π^+ and π^- asymmetries can be measured simultaneously in the same apparatus and the relative asymmetries compared with minimal systematic error. (The first order QCD predictions for A_{LL} of Ref. 8 are quite different for π^+ and π^-.) Second, a π at some $p_\perp$ is well defined, as contrasted with a jet which may have contaminants of a beam jet with different asymmetry properties. Third, simultaneously within the same apparatus we can do asymmetry measurements on $K^\pm$ and possibly K°, albiet at lower $p_\perp$ than for pions. The K asymmetries may be particularly interesting if the production involves a strange sea quark.[15] Fourth, as stressed previously, this particular experiment allows checks of systematic effects. A knowledge of systematics checks may be very useful for other experiments.

Experimental Apparatus

Our first motivation in the design of the experimental apparatus is to obtain the largest acceptance for processes with small cross sections consistent with making thorough checks of possible systematic problems in measuring a small asymmetry. As described in the section on systematic errors, the π spectrometer must have adequate momentum $p_\perp$ resolution and very similar acceptances for same sign particles on opposite sides of the beam.

We propose to use a two-arm magnetic spectrometer with bending perpendicular to the scattering angle as shown in Fig. 3. This configuration will tend to match the acceptances of the two arms. Triggering on high $p_\perp$ pions will be done with scintillation hodoscopes and fast logic matricies.

Several sets of X Y U V proportional chambers backed up by drift chambers for increased resolution in the bending plane only will be used. There will be no chambers within about 1.5 meters of the target and no chambers in the beam or close to the beam where quasi-elastic scattering from heavy nuclei in the target could give high rates in a small area. Track finding can be started in chambers far from the target and extrapolated into chambers close to the target. A scintillator counter vertex hodoscope may provide a further constraint. Drift chambers with half-cell of 6 mm and wires only 20 cm long should function in this environment to provide spatial resolution of 200 to 300 microns.

We expect only about 1 track in each upstream chamber per interaction. The interaction rate will be about 10^7 per spill for 3×10^7 beam. With a

Tevatron spill the instantaneous rate could be 10^6 per second. The rates in the MWPC closest to the target should not be more than 30 kHz per wire.

A spectrometer using two BM109 or two BM105 magnets would provide very good momentum resolution (about +- 0.8%) and adequate phi coverage for a given $p_\perp$ but very limited acceptance in x_F. A spectrometer built of two halves of a BM105 with iron added to make two magnets (as shown in Figs. 4 and 5) could be arranged to have a larger acceptance in x_F and $p_\perp$ and adequate momentum resolution of about 1.5% to 2.2% on a 40 to 60 GeV/c, X=0, $p_\perp$ = 4 GeV/c pion.

While our primary motivation for this configuration is control of systematic errors, this particular magnet system would provide better momentum resolution than a large aperature magnet such as an SCM105 with less than half the electric power usage.

Particle Identification

The apertures of the two spectrometer arms are small enough that most events will have no more than one detected particle. Therefore, the task of hadron identification is made simple. A pair of threshold Cherenkov counters in each arm permits unambiguous identification for $p_\perp$ between 2 and 4 GeV/c. The properties of the two counters and the tagging scheme are given in Table 1; they are filled with helium-nitrogen mixtures at atmospheric pressure for maximum safety and ease of construction.

Locating the Cherenkov counters behind the analyzing magnets greatly reduces their accidental rates, but it means that focussing optics cannot be used in the vertical plane. The counters will have cylindrical mirrors focussing to rows of Winston-cone collectors. A counter of this design was built

Table I

2-Cherenkov ID Scheme B

Thresholds (GeV/c):	π	K	P
1. He - N_2	16.8	60	114
2. He - N_2	8.8	32	60

Definitions:	00	01	11
8.8 - 16.8 GeV/c	P/K	π	--
16.8 - 32	P/K	--	π
32 - 60	P	K	π
60 - 114	--	P	K/π

Parameters:	Counter 1	Counter 2
β_{Thresh}	.99996	.99987
$\theta_c(\beta=1)$	8.9 mr = 0.51°	16 mr = 0.92°
$\sin^2 \theta_c$	0.8×10^{-4}	2.6×10^{-4}
photons/m	4	13

Counter Length for a Given Efficiency (assume 20% PMT quantum efficiency)

95%	3.8 m	1.2 m
98%	5.0 m	1.6 m
99%	6.0 m	1.9 m

at Argonne for use at the ZGS and had measured efficiency over 99% throughout the design acceptance. The main mirrors are aluminized 1/8" acrylic with 1.5-meter radius of curvature. The collector cones are 30 cm wide, dividing each counter into 4 cells and allowing identification in most multiple-track events.

Triggering and Tracking

The basic trigger for a high momentum particle is provided by a pair of scintillator hodoscopes in each arm. H1 is a single layer of 16 2-cm-wide counters just in front of the analyzing magnet. H2 is two overlapping layers of 12.5-cm-wide counters at the rear of the experiment. By choosing different combinations of H2 counters in coincidence with each H1, the momentum threshold for generating a trigger can be varied from 24 to 70 GeV/c; see Table II. With any hodoscope made of finite elements, it is impossible to have a perfectly uniform momentum requirement across its face; this system has a variation of ± 20% as a function of vertical production angle.

For particle tracking, we will use a combination of MWPC's and drift chambers as listed in Table III. The drift chambers are needed for good resolution in the vertical plane, making good momentum measurement possible in spite of the small bend angles. The relatively small number of drift wires permits the use of standard octal TDC modules for readin. Track-finding is made much more reliable by the redundancy of planes in front of the magnet.

The complete set of MWPC's and their readin system are in existence and have proved their reliability in experiments at LAMPF and the Argonne ZGS.

HIGH-MOMENTUM HODOSCOPE TRIGGER

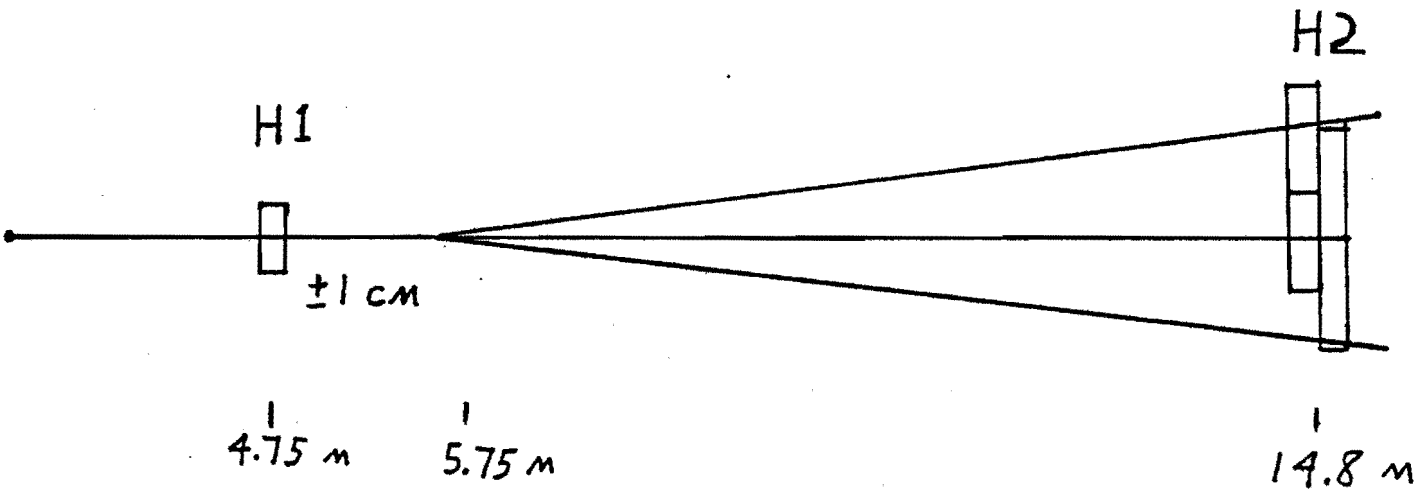

Table II
Path Through H1 Element

H_2 Coinc	Center		Upper Edge		Lower Edge	
Width	Max. Bend	Min. Mom.	Max. Bend	Min. Mom	Max. Bend	Min. Mon
3	21 mr	24 GeV/c	17.6 mr	28 GeV/c	24.4 mr	20 GeV/c
5/2*	17.8	28	14.3	35	21.2	23
2	14.2	35	10.8	46	17.6	28
3/2*	10.6	47	7.2	69	14.0	36
1	7.1	70	3.7	135	10.5	48

Table III

Wire Chambers

Name	Location (Z)	Coordinate	Active Area	Sense Wire Spacing	No. Sense Wires
PWC 1	1.5 m	X	12.8 cm	2 mm	64
		Y	16.0 cm	2 mm	80
DC 1	1.6 m	Y	16.0 cm	10 mm	16
PWC 2	3 m	X	12.8 cm	2 mm	64
		Y	28.8 cm	2 mm	144
PWC 3	3.2 m	U*	32.0 cm	2 mm	160
		V*	32.0 cm	2 mm	160
PWC 4	4.3 m	X	12.8 cm	2 mm	64
		Y	40.0 cm	2 mm	200
DC 2	4.4 m	Y	40.0 cm	25 mm	16
PWC 5	7.2 m	X	19.2 cm	2 mm	96
		Y	51.2 cm	2 mm	256
DC 3	7.3 m	Y	64.0 cm	40 mm	16
DC 4	12.8 m	Y	128.0 cm	40 mm	32

* PWC 3 is mounted at 45° rotation.

The drift chambers will be constructed for this experiment; their detailed design is under development.

Fast logic outputs are available from the MWPC wire amplifiers; these outputs can be grouped together to define "ways" from the target to the front hodoscope. If necessary to suppress background, these signals can be placed in coincidence with the hodoscope trigger.*

The experimental layout has been designed to keep accidentals to a minimum. Note that:

1. There are no scintillators between the spectrometer magnet and the Cherenkov counters.
2. There are no scintillators between the target and any of the wire chambers ahead of the magnet.

Polarized Target

In inclusive production measurements from polarized targets, a problem which was an inconvenience in elastic scattering measurements, becomes the dominant factor in experiments. The problem is that only a small fraction of the nucleons in a polarized target are polarized.

Consider elastic scattering from $C_2O_2H_6$ where H("free protons") are polarized. With sufficient experimental resolution, the scattering from polarized protons is easily resolved from scattering from bound nucleons having Fermi motion.

---

* We do not expect this requirement to be necessary; it could introduce false asymmetry due to chamber efficiencies (which can easily be corrected, however).

Now consider π^- inclusive production. Over most of the phase space, there are not kinematic constraints to determine the Fermi motion of the target nucleon. The effective polarization of the target will be much lower due to the fact that a large number of nucleons are not polarized. Naively:

$$P_{eff} = \frac{N_H \; P_H}{N_c A_c + N_o A_o + N_H} \; .$$

This gives $p_{eff} \approx 9\%$ for $C_2O_2H_6$ and $P_{eff} \approx 17\%$ for NH_3. In fact, the situation is even worse because inclusive or jet production is not proportional to A of a nucleus but goes as $A^{\alpha(p_\perp)}$, where α is greater than 1 in regions of interest.

We get:

$$P_{eff} = \frac{N_{pol} \; A_{pol} \; P}{N_{pol} \; A_{pol} + \sum N_i \; A_i^{\alpha i}} \; .$$

There are some subtle considerations here which are described in an Argonne memo by Dan Hill.

With 90% polarization of protons in ammonia (NH_3), we might get 17% effective polarization for α=1 and 12% for α = 1.2. This means that the asymmetries to be measured in an experiment will be less than 12% of the physics asymmetry in this case.

Recently at Saclay, polarization exceeding 70% has been obtained in a sample of ^{6}LiD for both the lithium and deuterium.[16] Both protons and neutrons are polarized to an extent dependent on nuclear wave functions. The

nucleons in deuterium have about 92% of the polarization of the deuterium. The ^6Li behaves roughly as a deuteron plus ^4He with the ^4He unpolarized (spin zero).

For inclusive measurements where isospin of the target does not matter or can be taken into account, this new target will have the following advantages:

1. Half the nucleons are polarized.
2. The effective target polarization will be about 30% instead of 12%.
3. The remaining nucleons are in a low A configuration (A between 4 and 6), so the dilution is not a large or as dominant an effect as in $C_2O_2H_6$ or NH_3.
4. Measured asymmetries are large and not as susceptible to systematic errors as with smaller effective polarizations.
5. Running times can be cut for equal error bars or better experiments can be done.

Another new type of target is under development by ANL Yale and SLAC. ND_3 would be better than NH_3 for many experiments. The engineering of a large target of ND_3 might occur earlier than for a ^6LiD target.

Beam and Polarimeter

We assume the beam is essentially as described in FNAL Proposal 581 and Addendum and in References 17 and 18.

We assume 3×10^7 polarized protons per spill with a slow spill of approximately 10 seconds. The experiment could be made to work with a 1 second spill. We assume polarization of 45%.

We assume spill to spill polarization reversal by means of a vernier magnet although running with both beam polarizations simultaneously by means of tagging should be possible with a long Tevatron spill.

We also require spin transformation and occasional (1/2 day intervals) reversal by means of the spin precession snake.[18]

Beam polarization can be measured continuously during the run with a second target and forward spectrometer. The beam polarization will have to be rotated from longitudinal to transverse with one magnet in the case of the A_{LL} measurement. Two types of polarization measurement are being considered. One utilizes Coulomb-nuclear interference in very small angle elastic scattering. This will give an absolute measurement but requires long runs due to the small analyzing power. This method will be set up initially in the beamline. It utilizes an active target described in Ref. 19. The other method would utilize inclusive $\pi^{\pm}$ production at large x and small $p_{\perp}$ as described in FNAL proposal 581. There are other ways to measure the beam polarization such as with the Primakof effect but these would require more complicated detectors.

Systematic Errors

We discuss various types of systematic errors and the ways in which they will be controlled in this experiment.

I. Undesired Components of Beam Polarization

In the transverse mode of beam operation the beam after the last quadrupole will be polarized primarily in the horizontal plane. Due to the Lorentz

transformation from Λ° rest frame to laboratory, there will be a longitudinal component of polarization of magnitude about 6% of the transverse polarization. This longitudinal component will not change sign along with the transverse component. This longitudinal component could be corrected by means of changes in the parameters of a spin precession snake from spill to spill but we will show that such a correction is not necessary for the physics measurements. For measurements utilizing transverse beam on an unpolarized target, asymmetries from the longitudinal component are parity violating and parity violation is not expected to exist in production reactions on the 10^{-3} level relevant to most experiments.

For experiments utilizing a longitudinally polarized beam on longitudinally polarized target, the initial longitudinal component is transformed into a transverse component of beam polarization which does not change sign and should not affect the measurement, either because A_{NL} is parity violating or because the effects of A_{SL} (which is small in existing data in any case) do not change sign like the effects being measured.

There may be small ($\lesssim$ 1%) angular transverse components which do change sign with the principal component of polarization. These are produced by precession of the major component in fringe fields of beam line magnets. These are of interest only for total cross section parity violation experiments since they are small and furthermore almost cancel themselves for the $\pi^\pm$ inclusive experiment.

II. Uncertainties in Inclusive Asymmetries Due to Uncertainties in $p_\perp$:

The errors involved in making an asymmetry measurement for a process with very steep $p_\perp$ dependence depend very sensitively on how well the $p_\perp$ measurement can be done. In the case of $pp \to \pi^- + X$ at $p_\perp = 3$ to 4 GeV/c $\frac{d\,N_{events}}{d\,p_T}$ changes by 2% in 1 MeV/c in $p_\perp$. A good physics measurement might require 2% error in the physcis asymmetry or 0.3% error in the raw counts asymmetry. We handle this problem as follows: For a wide bin in $p_\perp$ the number of counts is the integral over the bin and is essentially independent of the high $p_\perp$ edge of the bin since the cross section is falling so quickly in $p_\perp$. For π^- inclusive production this gives 0.35% for 1 MeV/c in $p_\perp$. The uncertainty on the edge of the $p_\perp$ bin for a given beam polarization will be $\sigma/\sqrt{N}$ where σ is the uncertainty on $p_\perp$ for a single event and N is the number of events.

Consider a calorimeter experiment with $p_\perp$ resolution ~ 300 MeV/c for each event. We would need ~ 100 K events to define the bin edge to 1 MeV/c. This is about the number of counts needed for 0.3% statistical errors on the asymmetry, which means that the experiment is feasible if we are willing to have the bin error equal to the statistical error on the asymmetry. However, if there were other systematic errors, say due to beam phase space variations, and we reversed the sign of the spin precession snake in the middle of the experiment, and the calorimeter gain was different in the first half of the experiment than in the second half, the phase space errors would not cancel unless some other variable such as target polarization were reversed often.

The presently proposed experiment will allow checking of the effects of various systematics without uncertainties due to statistical fluctuations in determining the $p_\perp$ bin edge.

We will compare two values of each of three variables during the couse of a run in order to control systematic errors. These can be 1) beam phase-space vs. polarization correlation 2) Target polarization 3) Left arm vs. right arm of detector. There are then $2^3 = 8$ experimental states and we would like the $p_\perp$ bin edge to be well defined for each. Using $\sigma/\sqrt{N}$, this will require that σ be about 100 MeV/c or about 2.5% at $p_\perp$ of 4 GeV/c.

Note that the differential cross section for pp elastic scattering at 300 GeV/c at $p_\perp \sim 1$ GeV/c falls about a factor of 6 faster than the π^- cross section discussed here. Successful polarization measurements have been made for elastic scattering at Fermilab[21] and at CERN. This factor of 6 is just about what is needed to compensate for beam and target polarization for a measurement of A_{LL} for π^- inclusives.

III. Combined Effects of Beam Phase Space and Target Density

We show that probable asymmetries due to the combined effects of beam phase space variation and target mass variation have no effect on our proposed physics measurements. Furthermore, beam intensity variation effects should be negligible and effects due to small beam direction variations can be eliminated.

A. The Beam

The phase space of the proposed polarized beam is not uniform when the beam is operated in transvese mode. The non-uniformity arises from the

selection of phase space areas in order to select polariztion and is directly correlated with polarization.

We choose 1/3 of a circular beam spot (actually many displaced spots due to momentum dispersion). The beam at the experimental target is an image of the beam getting through the collimator. This beam intensity is non-uniform with 63.7% of the beam in the left half of the target for right polarization and vice-versa.

This density distribution could be made more uniform at the expense of polarization but this will not be necessary.

B. The Target

Variations in total target density have been measured to be a few percent. The density of the left half of a target could differ from the density of the right side by 2%.

C. The Effects

The combined effects of beam phase space variation and left-right target uniformity variations can produce a fake asymmetry in detected rates.

As an example:

$$(\text{Left Beam}^{(+)} \cdot \text{Left Target} + \text{Right Beam}^{(+)} \cdot \text{Right Target}) - (\text{Left Beam}^{(-)} \cdot \text{Left Target} + \text{Right Beam}^{(-)} \cdot \text{Right Target})/2$$

$$\frac{(.637 \times 1 + .363 \times 1.02) - (.363 \times 1.0 + .637 \times 1.02)}{2}$$

$$= 2.7 \times 10^{-3} \text{ Fake Asymmetry}$$

Examples of real physics measured asymmetries are:

A_N (π^+) (with metal target)

= .45 (beam pol) x .05 (physics) = 2.2×10^{-2}

A_{LL} (π^+) (with polarized beam and target)

= .45 (beam pol) x .1 (eff. target pol.) x .05 (physics)

= 2.2×10^{-3}

D. Elimination of Systematic Errors

There could be a variation in luminosity which would be correlated with polarization. This could happen due to a non-uniform target and beam phase space variation. The effects can be easily eliminated for both A_N and A_{LL} measurements.

a) A_{LL} Measured Asymmetries

	Target +	Target -
Beam +	α(Physics + Syst.)	α(-Physics + Syst.)
Beam -	α(-Physics - Syst.)	α(Physics - Syst.)

where α is the detector efficiency.

$$\varepsilon_{physics} = \frac{\left[(B+T+) + (B-T-)\right] - \left[(B+T-) + (B-T+)\right]}{\Sigma}$$

The systematic asymmetry and efficiency both cancel out.

The basic asymmetry in A_{LL} is a rate asymmetry not a left-right asymmetry so the phase space fake asymmetry can be eliminated by reversing target polarization. The only problem is rate-dependent inefficiencies in beam counting which should not be too bad with a maximum of 10^6/spill/counter.

b) A_N Measured Asymmetries

	Left Arm	Right Arm
Beam +	α(Physics + Syst.)	β(-Physics + Syst.)
Beam -	α(-Physics - Syst.)	β(Physics - Syst.)

If the relative efficiencies of the two arm are known, the systematic effect can be eliminated

$$\varepsilon_{physics} = \frac{\left(\frac{L^+}{\alpha} + \frac{R^-}{\beta}\right) - \left(\frac{L^-}{\alpha} + \frac{R^+}{\beta}\right)}{\Sigma}$$

For small asymmetries the efficiency α can be defined as

$$\alpha = \frac{L^+ + L^-}{(L^+ + L^-) + (R^+ + R^-)}$$

$$\varepsilon_{physics} = \frac{(R-L+) + (L+R-) - (R+L-) - (L-R+)}{(R+L+) + (R-L+) + (L+R-) + (L-R-) + (R+L-) + (R-L-) + (L+R+) + (L-R+)}$$

E. The beam direction could change slightly with the polarization. Because the cross sections fall steeply with $p_\perp$, this could give a false asymmetry. If the vernier magnet is in the correct position, the beam direction should not change, but we have two remedies for the effect.

a) We can measure individual track directions to better than .1mr with hodoscopes and get the average beam direction for a spill to better than .01 mr to obtain beam transverse momentum for a spill to 3 MeV/c and much smaller values in a day.

b) Reversing half of the superconducting snake magnets reverses the sign of the correlation between beam direction and polarization.

Equipment Requirements

We will need the following equipment:

1. Use of the polarized beam operated in the transverse mode with reversible spin rotation magnets to get longitudinal polarization.
2. The beamline polarimeter.
3. Modification of an existing BM-109 or BM-105 bending magnet.
4. A 100-cm long liquid hydrogen target.
5. Threshold Cerenkov counters to be built by experimenters.
6. Use of one of a modified Argonne polarized proton target or new target.

7. Minimal fast logic, CAMAC units, etc. from PREP (most will be available from experimenters).

8. On-line computer, magnetic-tape units, etc. for data taking.

Rates and Run Plan

Rates have been calculted for the x_F and $p_\perp$ bins of Table IV for our acceptance using the data of Ref. 20. The $p_\perp$ bin of .05 GeV/c was chosen so that the cross section would only change by roughly a factor of two within a bin. The asymmetries of adjacent bins can be combined to reduce error bars since the asymmetries are expected to change slowly with $p_\perp$.

The quoted error bars are $1/P_B P_T \sqrt{N}$ where P_B is beam polarization including A dependent effects at high p_T, and N is number of detected events in a bin.

We propose to run the experiment in two parts:

1) with polarized beam and hydrogen target and

2) with polarized beam and polarized target.

1)	200 hours	startup
	700 hours	A_N measurement
2)	100 hours	A_{LL} startup
	700 hours	A_{LL} measurement

Table IV

Rates and Statistical Errors

Measurement A_N

Hours	Spills	Total Beam	Beam Pol.	Target Int. Fraction	Effective Target Pol.	Events	% Error Physics Assym.	Trigger Cross Section	Max. $p_\perp$	$\Delta p_\perp$ Bin	Δx Bin
700	4×10^4	10^{12}	.45	0.1	x(hydrogen)	5×10^4	1.%	20 nb	2.9	.05	.1
						6×10^3	3.%	2.5	3.2		
						5×10^2	10.%	.2	4.0		
						5×10^2	10.%	.2	4.9	.1	.2

Measurement A_{LL} (^{6}LiD)

700	4×10^4	10^{12}	.45	0.3	0.3	5×10^5	1.%	66	2.5	.05	-1
						6×10^4	3.%	8	3.1		
						5×10^3	10.%	.7	3.7		
						5×10^3	10.%	.7	4.1	.1	.2

References

1. M. J. Alguard et al., Phys. Rev. Lett. 37, 1258 (1976); Phys. Rev. Lett. 37, 1261 (1976); Phys. Rev. Lett. 41, 70 (1978); Madison Conference, 1980.

2. Asymmetry Measurements for Dimuon Production in the J/ψ Mass Region, Fermilab Proposal (January, 1981) K. Miyake, Kyoto University spokesman.

3. Spin Dependent Processes Involving a Real Photon, J. A. Hassan and D. J. Pilling, Department of Theoretical Physics, University of Manchester M13 9PL, United Kingdom M/C TH 80/23.

4. Asymmetries in Large P_T Photoproduction and the Polarized Gluon Structure Function, M. Fontannaz, B. Pire, and D. Schiff LPTHE 80/25 July (1980) LPTHE, Universite Paris Sud Orsay, Bat 211 91405 Orsay, France.

5. A Higher-Twist Term in Inclusive Pion Production at Large Transverse Momentum, E. L. Berger, T. Gottschalk, and D. Sivers, ANL-HEP-PR-80-58, (July, 1980).

6. A Survey of Polarization Asymmetries Predicted by QCD, F. Baldracchini, N. S. Craigie, V. Roberto and M. Socolovsky, International Centre for Theoretical Physics, Miramare, Trieste, Italy IC/80/148 (September 1980).

7. J. B. Babcock, E. Monsay and D. Sivers, Phys. Rev. Lett. 40, 1161 (1978); Phys. Rev. D (Feb. 1979) and earlier references therein.

8. H. Cheng and E. Fischbach, Purdue University preprint, August 1978.

9. J. Ranft and G. Ranft, Paper #487, submitted to the 1978 Tokyo Conference.

10. C. Bourley and J. Soffer, Phys. Lett.

11. R. Carlitz, J. Kaur, Phys. Rev. Lett. 38, 673 (1977); 38, 1102 (E) (1977).

12. Spin Dependence on the Inclusive Reaction p + p (Polarized) → π° + X at 24 GeV/c for High P_T π° Produced in the Central Region, J Antille, et al., Phys. Letters 94B, 523 (1980).

13. R. P. Feynman, R. D. Field and G. C. Fox, Nucl. Phys. B128, 1 (1977); Phys. Rev. D18, 3320 (1978).

14. C. Bromberg et al., Nucl. Phys. B171, 1 (1980).

15. Whirlpools in the Sea: Polarization of Antiquarks in a Spinning Proton F. E Close and D. Sivers, Phys. Rev. Lett. 39, 1116 (1979).

16. A New Polarized Target Material: ^{6}LiD, A. Abragam, V. Bouffard, Y. Roinel and P. Roubeau, DP. H/SRM - CERN Saclay Orme des erisiers B.P. n° 2 - 91190 Gif-sur-Yvette, France

17. Hyperon Beams as a Source of Polarized Protons, D. G. Underwood in High Energy Physics with Polarized Beams and Polarizd Targets, AIP Conference Proceedings, No. 51, Particles and Fields 17 (1979).

18. A Survey of Eight-Magnet Spin Precession Snakes, D. G. Underwood, Nuclear Instruments and Methods 173, p. 351 (July 1980).

19. On the Possibility of Using a Multiscintillator Target for Small-Angle Elastic Scattering at High Energies, K. Kuroda, A. Penzo and V. Solovianov, CERN EP Internal Report 79-1 (January 1979).

20. Production of π^+ and π^- at Large Transverse Momentum in p-p and p-d Collisions at 200, 300 and 400 GeV, D. Antreasyan, J. W. Cronin, H. J. Frisch, and M. J. Shochet, L. Kluberg, P. A. Piroue and R. L. Sumner, Phys. Rev. Lett. 38, 112 (January 1977).

21. Polarization Parameters and Angular Distributions in $\pi^{\pm}p$ Elastic Scattering at 100 GeV/c and in pp Elastic Scattering at 100 and 300 GeV/c, R. V. Kline et al., Phys. Rev. D22, 553 (August 1980).

Figure Captions

Figure 1 Data from polarized ep scattering of Ref. 1 with curves from an SU6 model of the proton quark spin distribution function and the Carlitz-Kaur model of Ref. 11.

Figure 2 Values of A_{LL} as calculated in Refs. 8 and 9 using the model of Ref. 11 for the proton spin distribution which best fits the data of Ref. 1 and Fig. 1.

a) $\vec{p}\vec{p} \rightarrow \pi^{\pm} X$

b) $\vec{p}\vec{p} \rightarrow \pi^{0} X$ or jet X, and

c) $\vec{p}\vec{p} \rightarrow \pi^{0} X$ or jet X.

Figure 3 The proposed experimental layout.

Figure 4 A plan of one arm of the spectrometer.

Figure 5 A modification of a BM105 magnet suitable for the spectrometer.

Figure 6 Polarized beam layout and intensity curve.

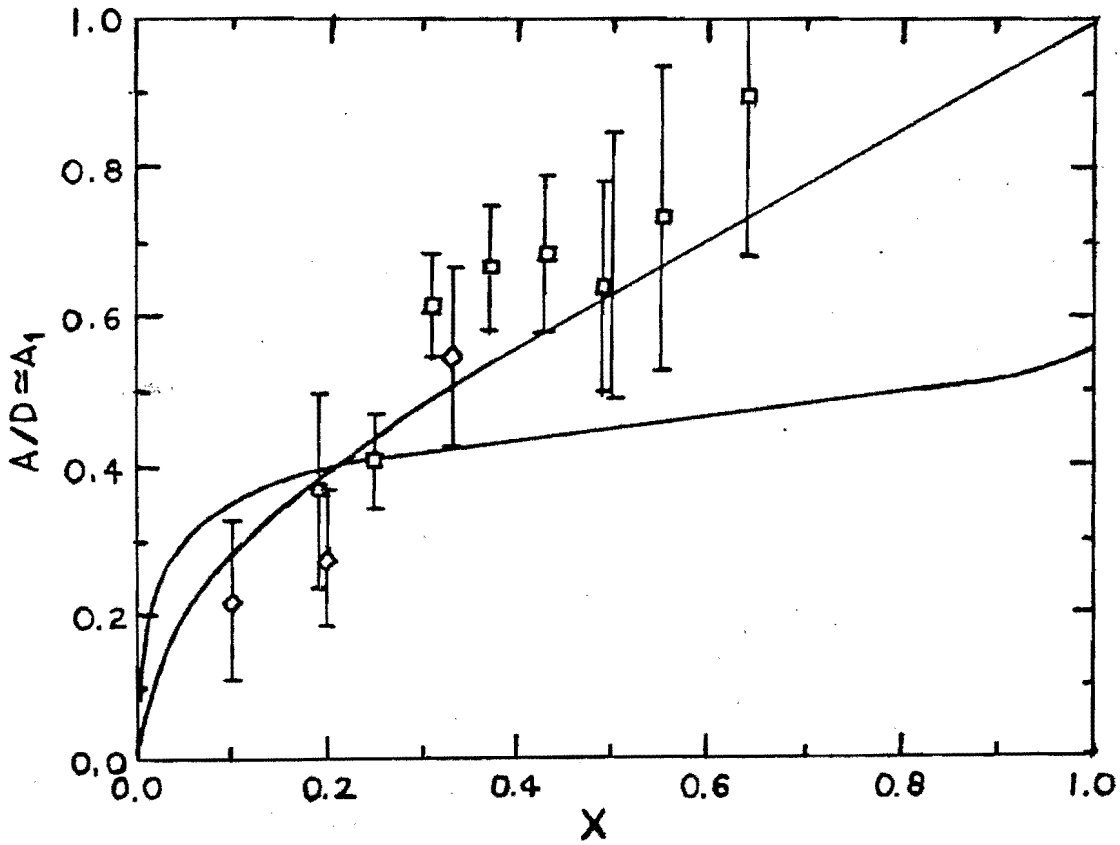

Figure 1

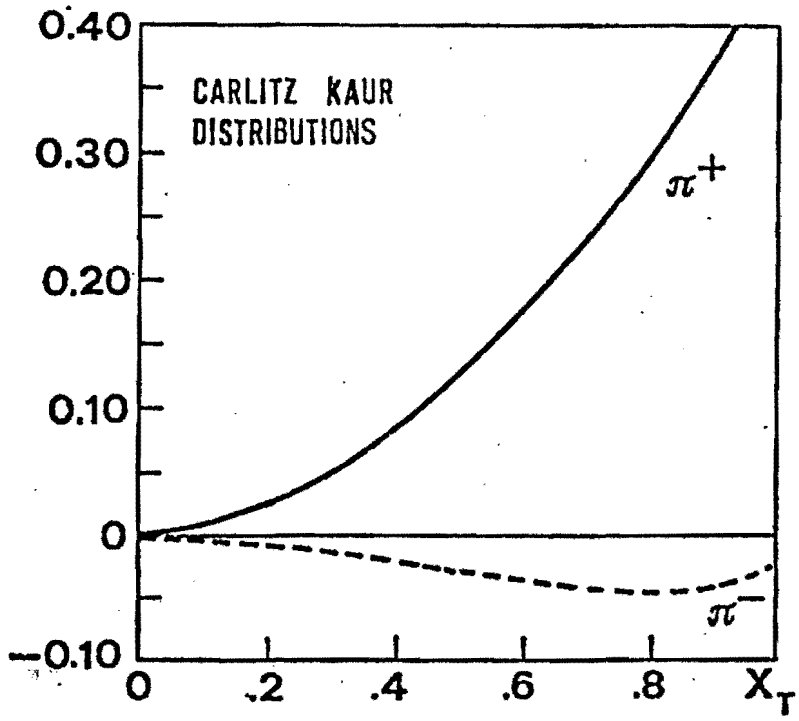
CARLITZ KAUR
DISTRIBUTIONS
0.40
0.30
0.20
0.10
0
−0.10
0
.2
.4
.6
.8
X_T
π^+
π^-

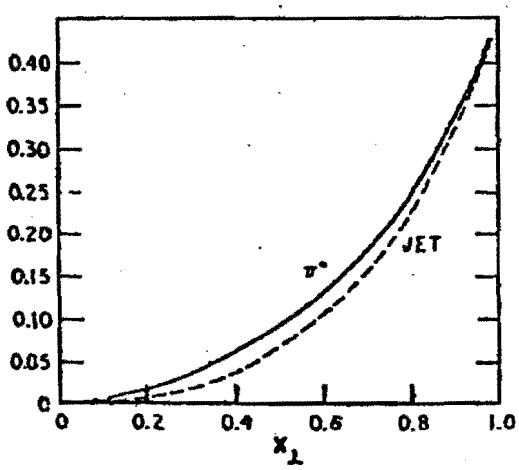
0.40
0.35
0.30
0.25
0.20
0.15
0.10
0.05
0
0
0.2
0.4
0.6
0.8
1.0
$X_\perp$
π^0
JET

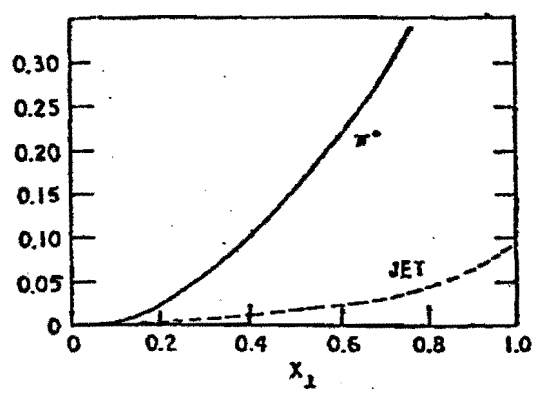
0.30
0.25
0.20
0.15
0.10
0.05
0
0
0.2
0.4
0.6
0.8
1.0
$X_\perp$
π^0
JET

Figure 2

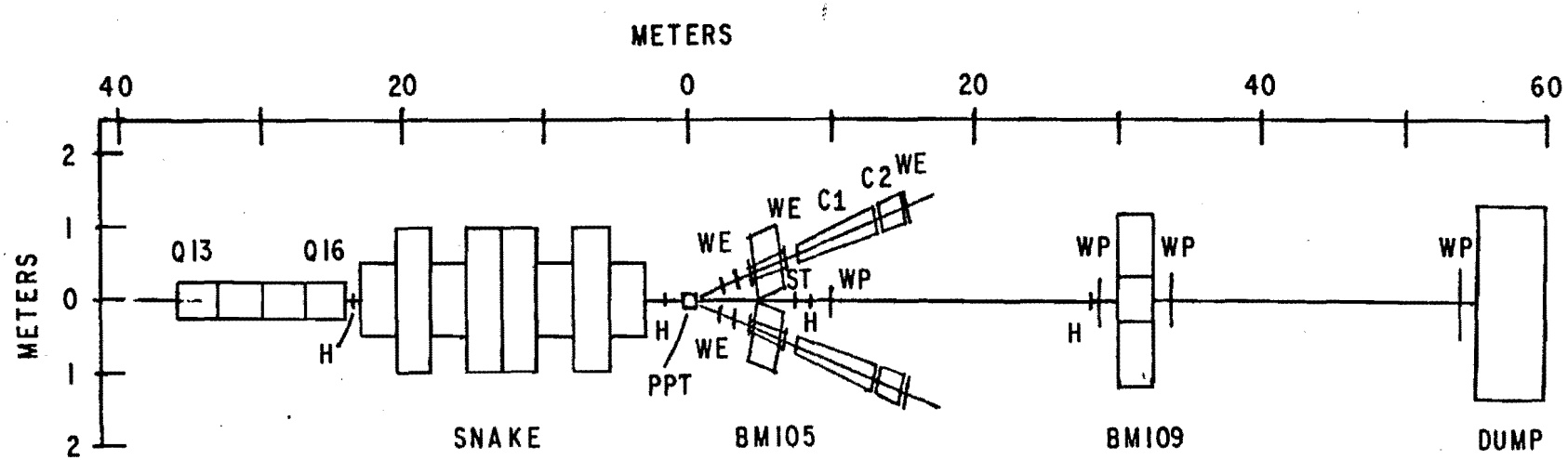

H HODOSCOPE
WE WIRE CHAMBERS - EXPERIMENT
WP WIRE CHAMBERS - POLARIMETER
PPT POLARIZED TARGET
ST SCINTILLATOR ACTIVE TARGET FOR POLARIMETER

Figure 3

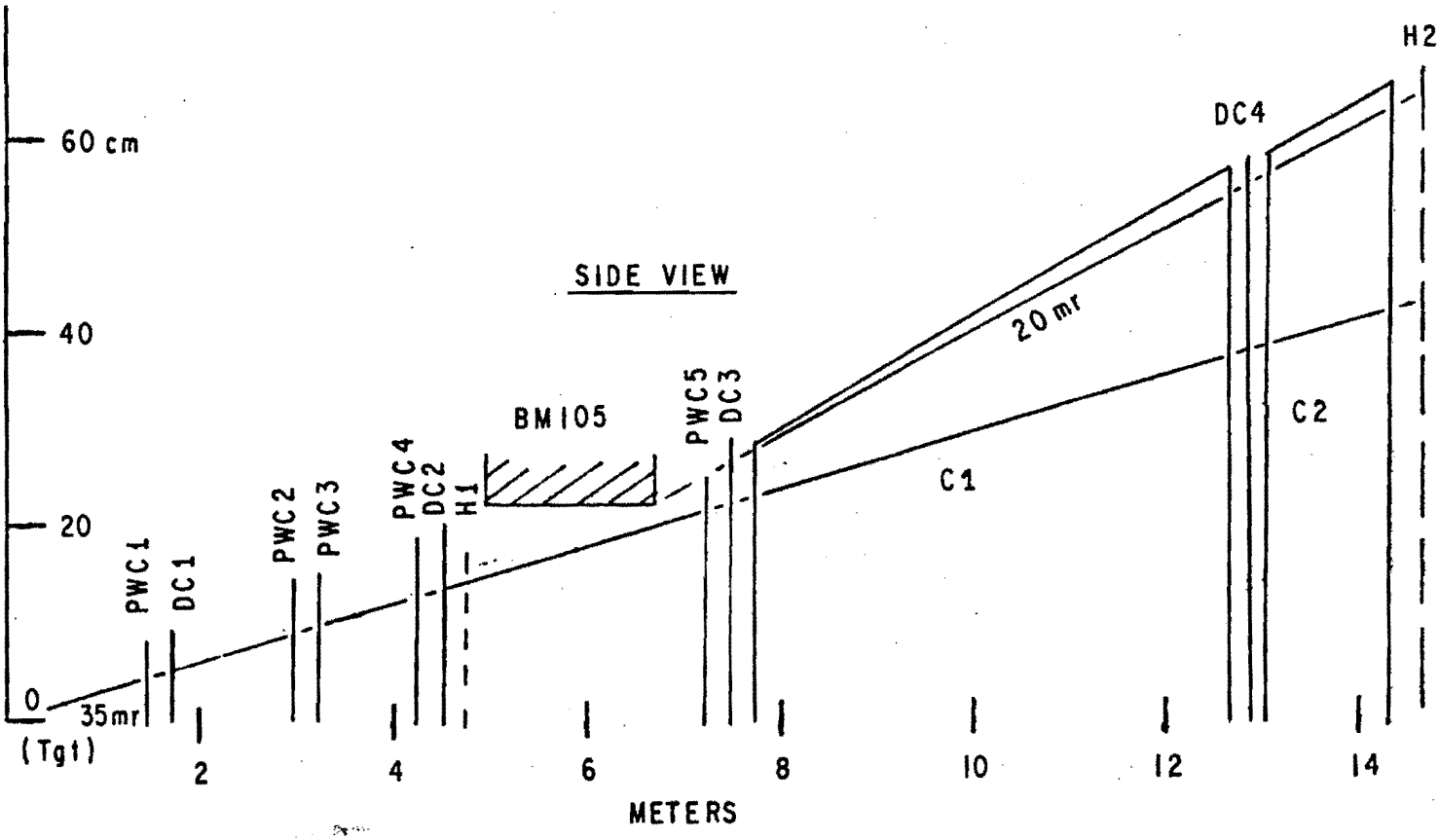
60 cm
40
20
0
(Tgt)
35mr
SIDE VIEW
PWC1
DC1
PWC2
PWC3
PWC4
DC2
H1
BM105
PWC5
DC3
20 mr
C1
C2
DC4
H2
2
4
6
8
10
12
14
METERS

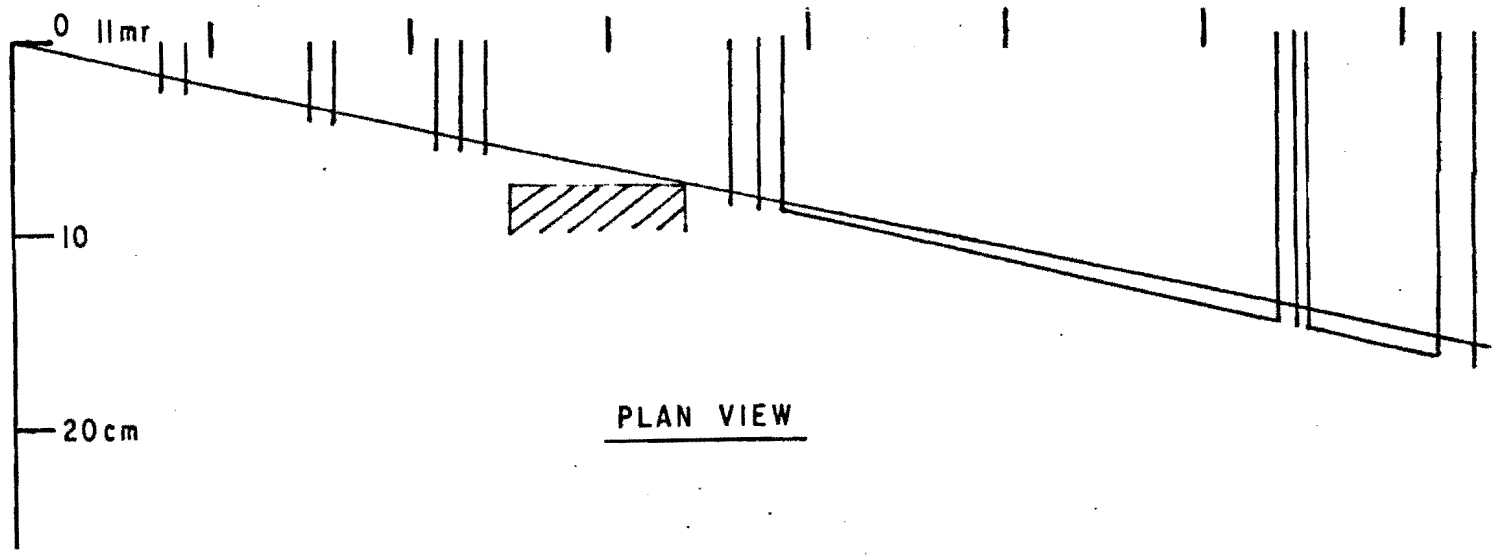
0
11mr
10
20cm
PLAN VIEW

Figure 4

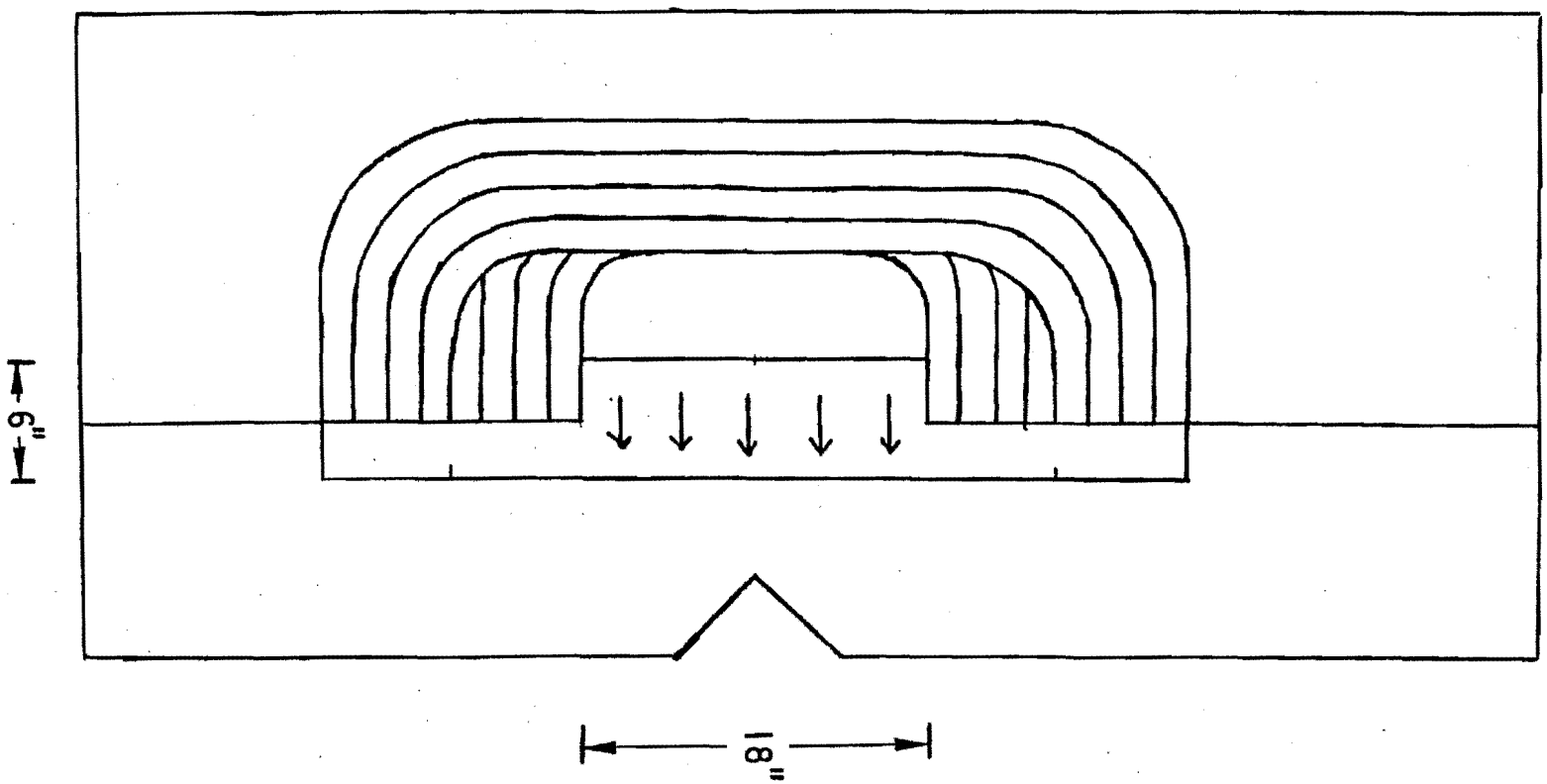

Figure 5

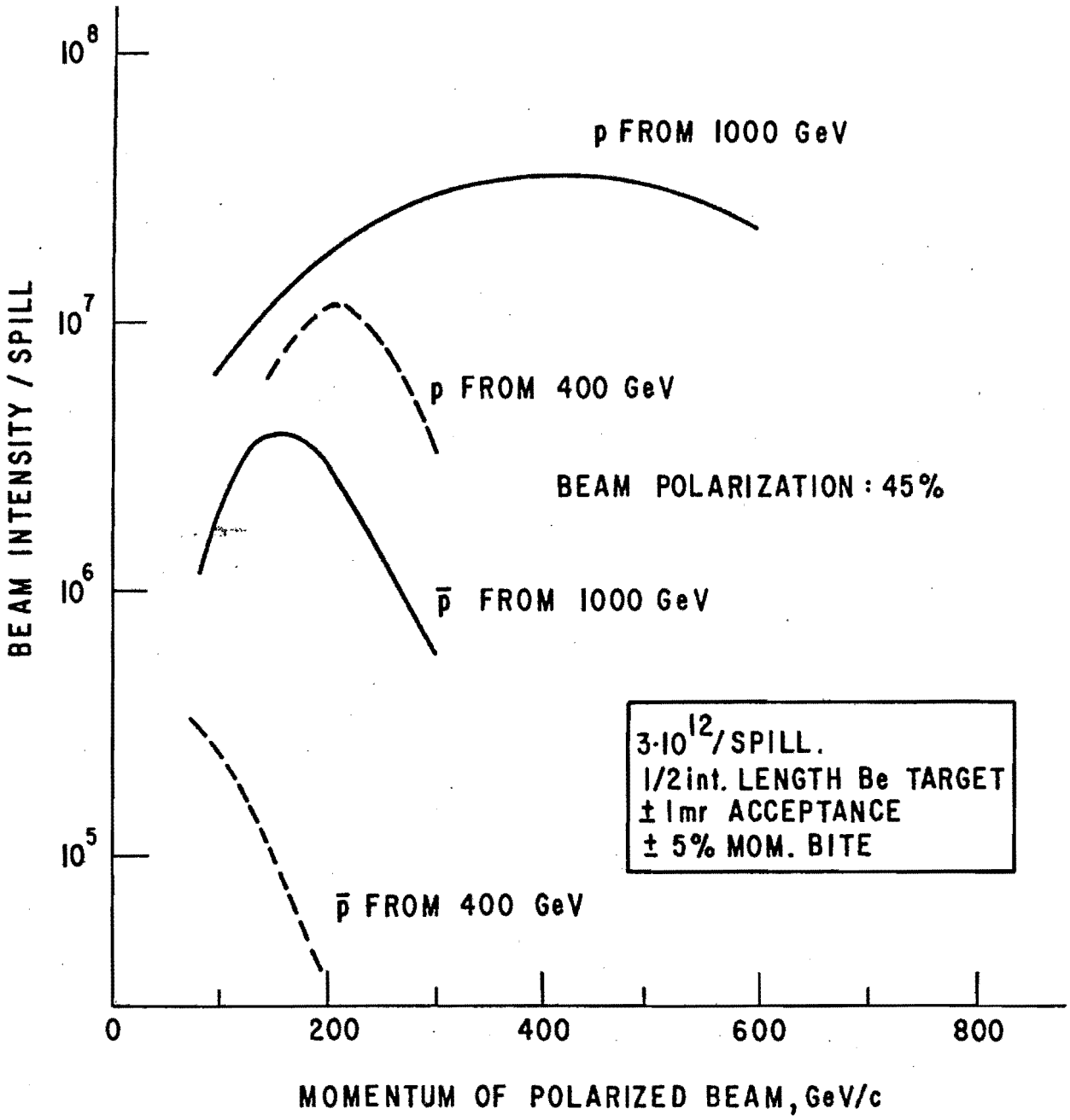
10^8
10^7
10^6
10^5
BEAM INTENSITY / SPILL
p FROM 1000 GeV
p FROM 400 GeV
BEAM POLARIZATION : 45%
$\bar{p}$ FROM 1000 GeV
$3 \cdot 10^{12}$/SPILL.
1/2int. LENGTH Be TARGET
± 1mr ACCEPTANCE
± 5% MOM. BITE
$\bar{p}$ FROM 400 GeV
0
200
400
600
800
MOMENTUM OF POLARIZED BEAM, GeV/c

Figure 6