Proposal to Search for Particles which have an Anomolous Interaction with Normal Matter

R. Gustafson
University of Michigan

D. Garelick, M. Glaubman, H. Johnstad
Northeastern University

R. Rusack*
Rutgers University

(submitted: June 13, 1978)

Abstract

The CØ (Internal Target Area) magnetic spectrometer will be used to search for particles which have an anomolously high interaction with normal matter. (Quarks may be such particles.) The apparatus will measure charge to mass ratio (q/m) for particles produced in interactions of the accelerator beam with a warm hydrogen gas jet. The total material from production point to the end of the detector will be significantly less than 5×10^{-2} grms/cm^2, making it possible to detect for the first time these anomolous particles. An exploratory experiment of one week set up time and 100 hours of running is requested.

*Scientific Spokesperson (telephone 312-840-3969)

this proposal.

place a thin berylium foil that can be remotely flipped in and out of the path between the target and the dipole.

Our trigger will be either a coincidence between one of the hodoscope elements and the plastic counter directly behind it, or singles in the hodoscope and we will read out all the other counters.

Experimental Method

The method we propose to use is to determine the value of q/m using information from the magnet and time of flight.

The measurement of p/q will be done by placing a collimator in the dipole bore upstream of the field with a slit width of 2" and detecting the bent particle with the hodoscope plane. This method will give a measurement of p/q to 7% (f.w.).

Time of flight will be measured by the hodoscope and the beam bunch time. This will of course give a T.O.F. modulo 18.8 ns, the bunch separation. Before the bunch spreader is turned on at 60 GeV the bunch half-width is 0.5 ns, after that it increases to 2 ns. Since time resolution is essential to this measurement, we will work below 60 GeV.

Resolution

The relation between q/m and momentum and velocity is given by

$$m/q = p\sqrt{1/v^2 - 1/c^2}$$

Converting to units of time in nanoseconds and the flight path d in feet gives

$$m/q = p\sqrt{t^2/d^2 - 1}$$

From this the resolution in m/q can be found:

$$\delta(m/q) = \left\{ m^2 (\delta p/p)^2 + p^2/d^2 \ (p^2/m^2 + 1) \ \delta t^2 \right\}^{1/2}$$

Fig. 2 shows plots of the resolution for different particle types. The increase for the high recoil momentum is caused by the onset of relativistic effects. We will look at particles with a recoil momenta of 0.5 GeV and be sensitive to the regions of m/q of $<$80, 180 -- 420, 580 -- 850. (MeV/electron charge)

Rates

With the spectrometer set at 35° and the magnet set for unitary charged particles with a recoil momentum of 0.5 GeV, we will be sensitive to particles with an x_r of $(= p^*/p^*_{max})$ of 0.3, giving a counting rate of -10^3 π's /ramp. The sensitivity of the experiment is limited by this pion background and the unknown machine background. We expect to be able to see effects at the 1% of the π level, which will make us sensitive to cross-sections of the order $10 \mu b$. The actual limit of sensitivity will depend on how well we do the timing and how well we can eliminate the background radiation, which can only be determined by doing the experiment.

Requests

We intend to keep this exploratory experiment as simple as possible. We have chosen not to use the superconducting quadrupole doublet so that the liquid helium required to run the experiment can be produced by a single liquefier.

We are requesting 200 hours setup and run time. Our requests from the laboratory are for $5K. to make the necessary vacuum extensions and device to flip the foil in and out, $35 K. of PREP electronics and $5 K. of CDC time.

Scheduling

None of us have any commitments to running experiments for the next nine months. It would take one month to prepare for this experiment and it could be set up in one three day shutdown period, and completed in two weeks. It is feasible that we can complete this experiment by the August shut-down of 1978, and not interfere with the preparations for E591 which begin during that shutdown.

References

1. D. Garelick, "A New Idea for Searching for Free Quarks", Northeastern University preprint, NUB 2503, Oct., 1976.

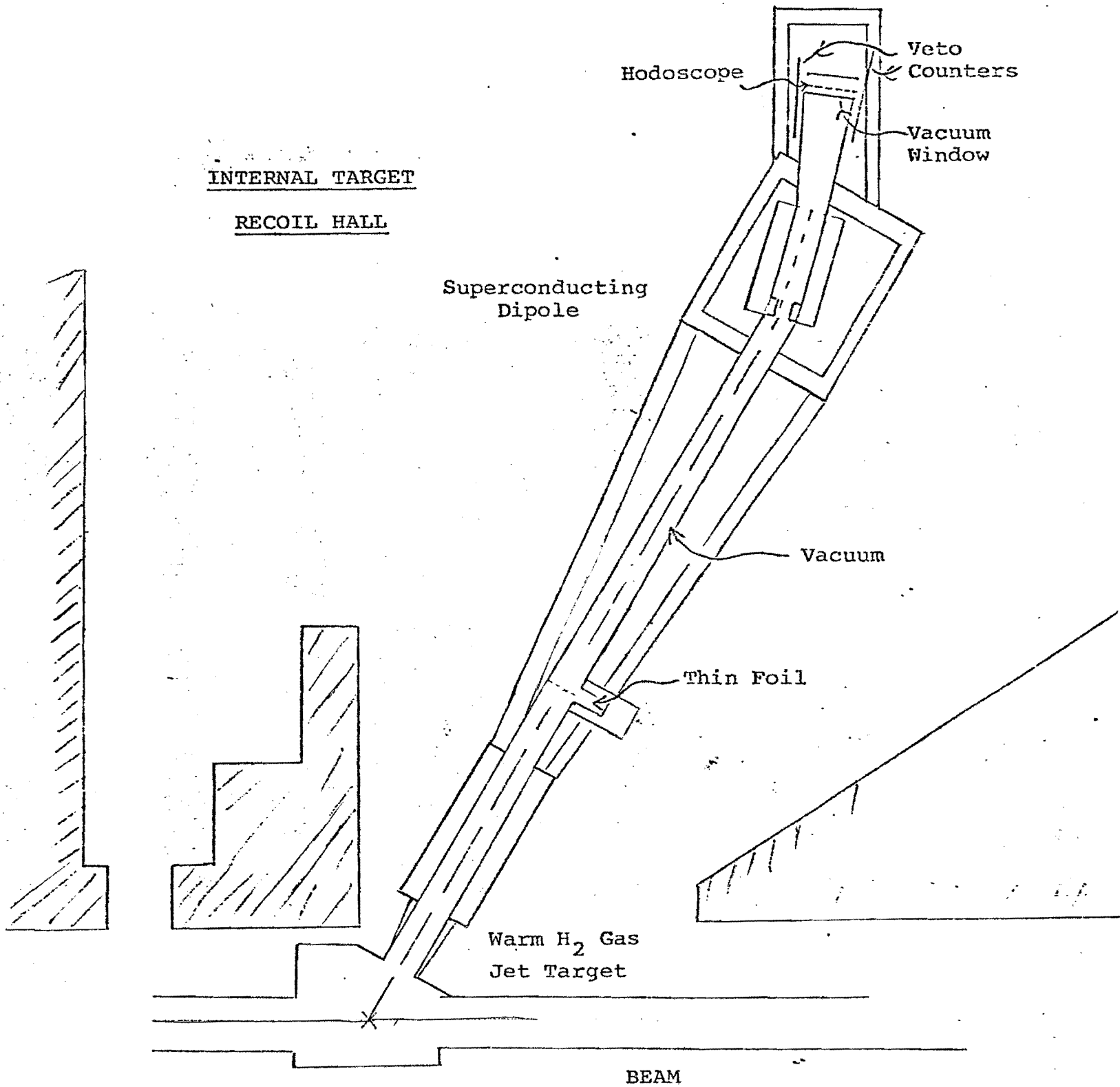

Figure (1) Experimental layout for proposed experiment.

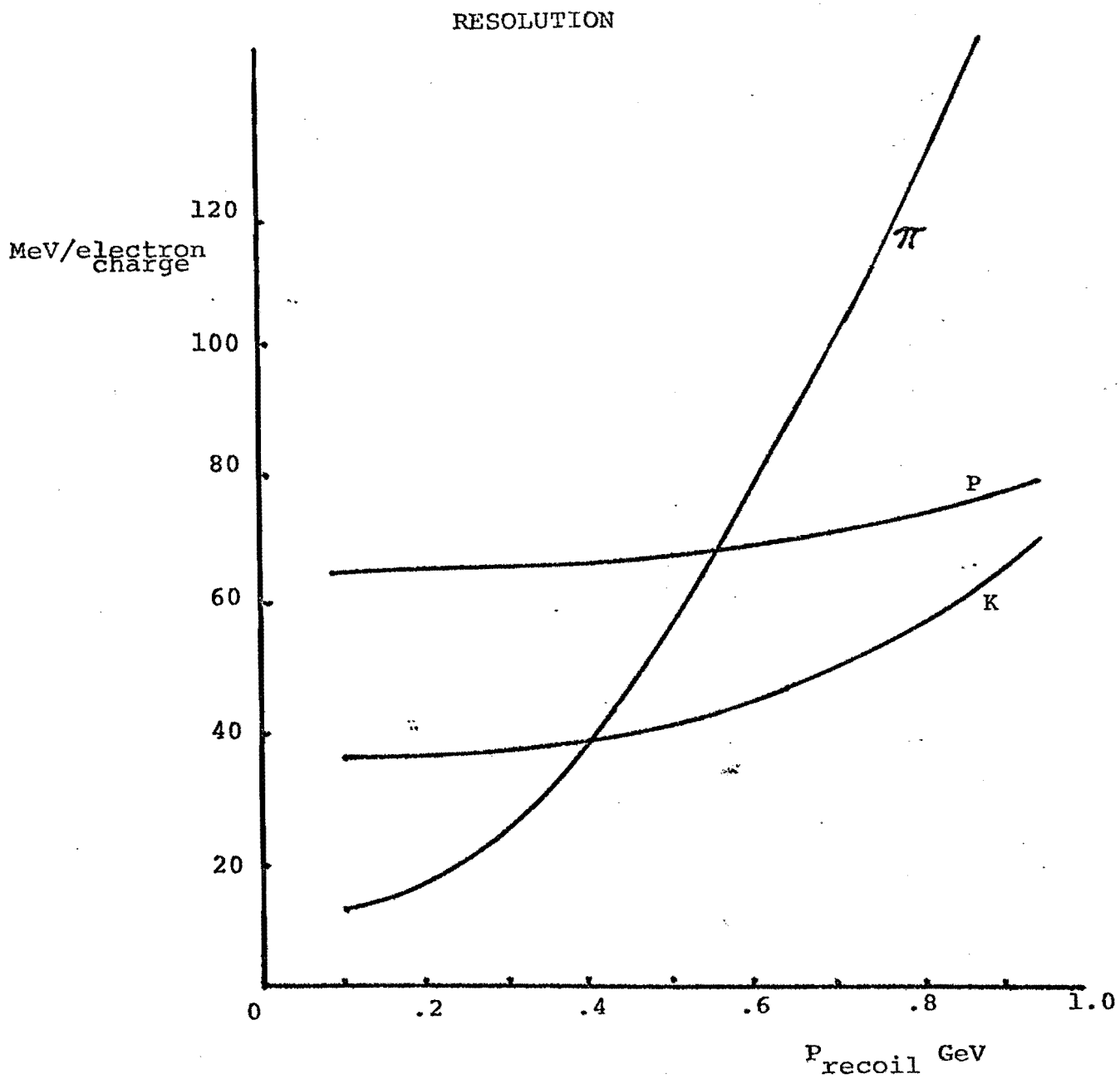
RESOLUTION
MeV/electron charge
120
100
80
60
40
20
0
.2
.4
.6
.8
1.0
P_{recoil} GeV
π
P
K

Fig. 2

Addendum to Proposal P607

(9/78)

Proposal to Search for Particles which have an Anomalous Interaction with Normal Matter

R. Gustafson

University of Michigan

M. El-Rayess, E. Futo, D. Garelick,*

M. Glaubman, H. Johnstad

Northeastern University

S. Childress

University of Washington

*Scientific Spokesperson: Telephone = 617-437-2936

617-437-2902

Introduction

The purpose of this addendum is to indicate our current plans and thoughts concerning P607. This addendum also contains some detailed calculations not presented in the original proposal. It is divided into the following sections:

I: The $(M/Q)^2$ Spectrum

II: Details of the Apparatus

A) Layout and $(M/Q)^2$ Resolution

B) Backgrounds and Additional Quark Signatures

III: The Sensitivity of P607

IV: Running time and other requests

I. The $(M/Q)^2$ Spectrum

In order to identify various particles detected by the P607 apparatus, we plan to plot the number of events versus $(M/Q)^2$. The reasons for this choice are apparent if one considers the experimental resolution in this quantity, $(M/Q)^2$. The relationship between $(M/Q)^2$ and the quantities determined by the apparatus can be found in the following manner.

$$\text{I)} \quad \theta_B = \frac{C_o QB}{p}$$

$$\text{II)} \quad p = \frac{M\ (v/c)}{\sqrt{1 - (v/c)^2}}$$

where: θ_B is the angle of bend;

Q is the particle's charge;

B the magnetic field;

p the particle's momentum;

C_o the constant relating θ_B, Q, B, p;

M is the particle's mass;

v is the particle's velocity; and

c is the velocity of light.

For the revised P607 apparatus (see section IIA) θ_B is determined by the point of intersection of the accelerator beam with the gas jet and the position of the hodoscope counter hit by the particle. v/c is determined by measuring the time-of-flight between an accelerator r.f. bunch and the time at which the hodoscope counter is hit.

Combining I) and II) gives:

$$\text{III)} \quad \frac{Q}{M} = \frac{\theta_B}{C_o B} \frac{(v/c)}{\sqrt{1 - (v/c)^2}} = \frac{1}{p_1} \frac{(v/c)}{\sqrt{1 - (v/c)^2}}$$

where p_1 is the momentum that a charge Q = 1 particle would have in order to be bent through an angle θ_B. From III) we get

$$\left(\frac{M}{Q}\right)^2 = p_1^2 \left[\frac{1 - (v/c)^2}{(v/c)^2} \right]$$

$$\left(\frac{M}{Q}\right)^2 = p_1^2 \left[(c/v)^2 - 1 \right] \quad .$$

Also $$c/v = \frac{c}{(L/t)} = \frac{t}{(L/c)} = \frac{t}{t_o}$$

where t is the time of flight, and L is the distance from the production point to the hodoscope counter. t_o is the time light would take to travel the distance L. Therefore:

$$\left(\frac{M}{Q}\right)^2 = p_1^2 \left[\left(\frac{t}{t_o}\right)^2 - 1 \right]$$

and the resolution in $(M/Q)^2 \equiv \delta(M/Q)^2$ is:

$$\delta[(M/Q)^2] = 2p_1^2 \sqrt{[(t/t_o)^2 - 1]^2\left[\frac{dp_1}{p_1}\right]^2 + [(\frac{t}{t_o})\ (\frac{\delta t}{t_o})]^2}$$

In order to evaluate the P607 apparatus, we assume the following "standard" quark charges and masses.[1]

Table I.1

Particle	Q Charge	M Mass (GeV)	$(M/Q)^2$ (GeV/electron charge)^2
u quarks	2/3	.336	.254
d quarks	1/3	.336	1.016
s quarks	1/3	.540	2.627
c quarks	2/3	1.5	5.073
π	1	.140	.020
K	1	.494	.244
p	1	.939	.882

Fig. I.1 $(M/Q)^2$ values for quarks and known particles

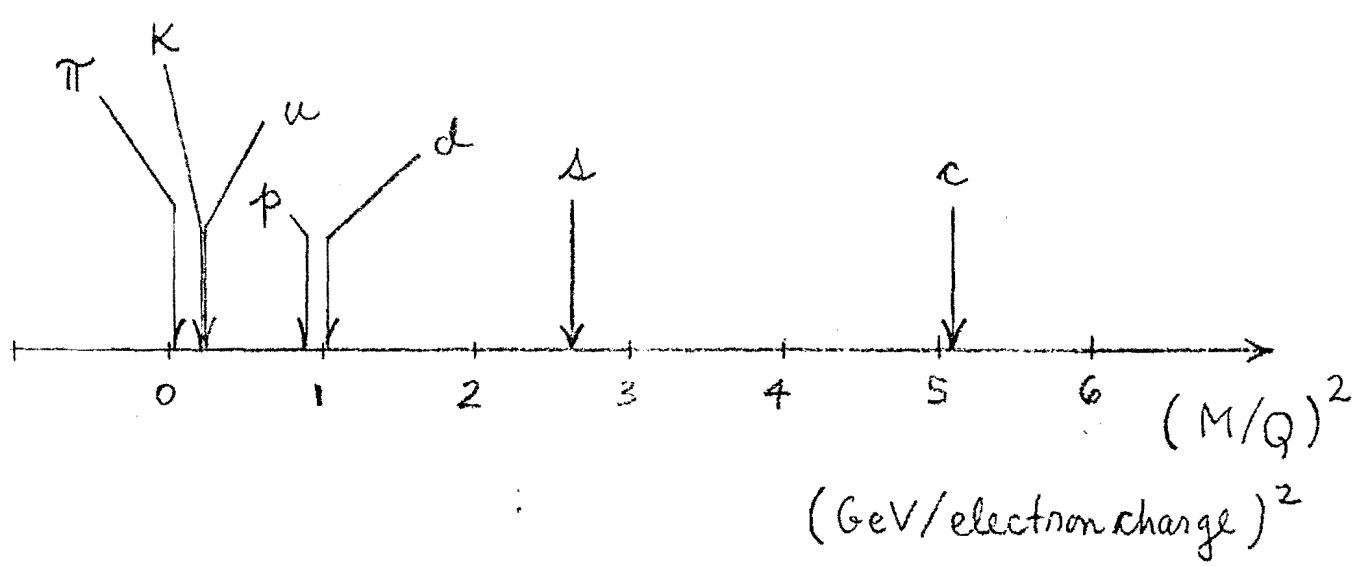

II. Details of the Apparatus

A) Layout and $(M/Q)^2$ Resolution

The layout of the P607 apparatus is shown in Figs. II.1-2. This layout differs from that of the original P607 proposal in that a quadrupole doublet has been added to the spectrometer. In this configuration the spectrometer is a standard point-to-point focusing spectrometer. The length of the spectrometer is determined by the need for good fractional ($\delta t/t$) time-of-flight measurements. The location of the quads is a compromise between the conflicting need for a large angular acceptance and the need for a small spatial magnification. In order to make the detector elements small, we have chosen a $\sim$ 1:1, object: image magnification. The effective object size at CO is [$\sim$ 1cm(H)]x[$\sim$ .5cm(V)](FWHM)^2. Since the spectrometer bends horizontally, the first quad, Q_1, is set to defocus horizontally and focus vertically in order to minimize the horizontal magnification. The actual magnifications are .9(H) and 1.1(V) and the distance from the dipole bend plane to the detector is L_B = 19 ft.

We have chosen the hodoscope element size to be 1.0 in (H) x .5 in (V) and there will be 7 elements in the hodoscope. This arrangement gives an angular acceptance of

$$\Delta\Omega = 24 \text{ mrad (H) x } 29 \text{ mrad (V)}$$
$$= 700\mu \text{ strad,}$$

and a momentum acceptance of

$$\Delta p/p = 6\%.$$

The momentum resolution for the system is $\delta p/p$ = 1% (FWHM) and the time of flight resolution is δt = 1 nsec (FWHM). The resolutions

in the quantity $(M/Q)^2$ and the time of flights for two settings of the spectrometer central momentum are given in Table II.1.

B) Backgrounds and Additional Quark Signatures

In order to help separate the quark signal from possibly large backgrounds from conventional particles traversing the spectrometer and from general room background, the focal plane detector shown in Fig. II.2 will be used. Some important features of this detector are:

1. The scintillator of each hodoscope element will be viewed by two phototubes in order to minimize the effect of phototube noise. These scintillators will be mounted in the vacuum chamber so that particles do not have to traverse material other than the gas of the jet before entering the scintillation material.
2. The pulse heights and timing information from all phototubes will be digitized for each event.
3. DEDX counters and the proportional chambers (PC's) will be used to help reject standard particles (π's, K's, p's) which should give "normal" pulse heights in the DEDX counters and straight tracks in the PC's.
4. To help identify cases in which an $\bar{s}$ anti-quark stops in the first .1 gm/cm^2 of material of the detector and combines with a u quark to form a K^+ meson, we will look for a muon track in the PC's indicative of $K_{\mu 2}$ and $K_{\mu 3}$ decays.

In addition, any quark signal is expected to be removed by insertion of the .1 gm/cm^2 Al foil across the spectrometer aperture. This foil will be moved in and out of the spectrometer aperture on a machine pulse-to-pulse basis.

III. The Sensitivity of P607

A measure of the sensitivity of P607 is given by the number of π^+'s that will be detected. The π^+ counting rate is given by:

$$\#_{\pi^+}/\text{ramp} = \frac{d\sigma}{dxdp_\perp}\,\Delta x\Delta p_\perp\,(\#\text{protons/cm}^2)\Big|_{tgt}\,(\#\text{protons/ramp})\Big|_{beam}\left(\frac{\Delta\theta_v}{2\pi\sin\theta_H}\right)$$

$$(\#\text{protons/cm}^2)\Big|_{tgt} = (10^{-7}\ \text{gm/cm}^2)(6\text{x}10^{23}\ \text{protons/gm})$$

$$= 6\text{x}10^{16}\ \text{protons/cm}^2$$

for a 1 second jet pulse:

$$(\#\text{protons/ramp})\Big|_{beam} = (2\text{x}10^{13}\ \text{protons/pulse})(5\text{x}10^{4}\ \text{circulations/ramp})$$

$$= 10^{18}(\text{protons/ramp}).$$

For a spectrometer setting of $\theta_H = 33.5^\circ$ and $p_1 = 2$ GeV, $\Delta\theta_H = 24$ mrad, $\Delta\theta_v = 29$ mrad, $\Delta p = .12$ GeV; $\Delta x\Delta p_\perp \simeq 10^{-3}$ GeV, $X \simeq .35$ and $P_\perp \simeq 1.1$ GeV, and $\frac{\Delta\theta_v}{2\pi\sin\theta_H} = 8.4\text{x}10^{-3}$ rad.

The results of E118 suggest:

$$\frac{d^2\sigma}{dxdp_\perp} \simeq 750\ \frac{P_\perp}{X}(1 - X)^4\ e^{-6P_\perp}(\text{mb/GeV})$$

or: $\frac{d^2\sigma}{dxdp_\perp} \simeq .6$ mb/GeV for $x = .35$, $p_\perp = 1.1$ GeV.

Thus:

$$\#_{\pi^+}/\text{ramp} \simeq (.6\text{x}10^{-27})(10^{-3})(6\text{x}10^{16})(10^{18})(8.4\text{x}10^{-3})$$

$$\simeq 300/\text{ramp}$$

or $\#_{\pi^+}/\text{day} \simeq 2\text{x}10^6/\text{day}$ (for 1 ramp/12 sec).

This corresponds to approximately $2\text{x}10^5$ K^+'s produced at the target. If $\bar{s}$ quarks are produced with the same x and $p_\perp$ behavior as π^+ then an $\bar{s}$ abundance of one in $6\text{x}10^6$ π^+ produced at the target will give a signal of $\sim 10^2$ $\bar{s}$ events per day.

Most probably, the sensitivity levels achieved will be determined by the actual background levels encountered in the experiment which are unknown at this time.

IV. Running Time and Other Requests

As indicated in the Spectrometer Layout, Fig. II.1, P607 will require that the magnetic elements of the existing CO spectrometer be repositioned. We will not change spectrometer angles during P607 so that the spectrometer elements can be set directly on the floor.

The experimenters will supply the detector and its small vacuum chamber. We expect Fermilab to supply and maintain the gas jet and the remainder of the spectrometer system such as, vac. parts, lqd. He, and the assembly to pulse the Al foil in and out of the spectrometer aperture.

We anticipate that it will take approximately 3 months for us to build and debug the apparatus and require approximately 4 weeks ($\sim$ 400 hours) of accelerator time to complete the experiment. We

estimate that it will require approximately one week to reconfigure the spectrometer and one week to install the detectors.

A modest amount of PREP electronics and off-line computing will also be required.

Our present best estimate is that we will be able to begin taking data for this experiment in April 1979. Until April 1979 our major effort will be the analysis of E439.

Reference

1. A. De Rujula, H. Georgi, S. L. Glashow, Phys. Rev. D12, 147 (1975) and references cited therein.

Table II.1. $(M/Q)^2$ Resolutions and Flight Times. (Assumed masses and charges are given in Table I.1.) e = one electron charge.

particle	$(M/Q)^2$ (GeV^2/e^2)	P_1 = 2 GeV $\delta(M/Q)^2$ (GeV^2/e^2)	t (nsec)	P_1 = 1 GeV $\delta(M/Q)^2$ (GeV^2/e^2)	t (nsec)
u	.254	.17	51.56	.05	55.99
d	1.016	.18	55.99	.06	71.00
s	2.627	.21	64.36	.09	95.22
c	5.073	.26	75.30	.14	123.21
π	.020	.16	50.12	.04	50.48
K	.244	.16	51.50	.05	55.77
p	.882	.18	55.24	.06	68.59

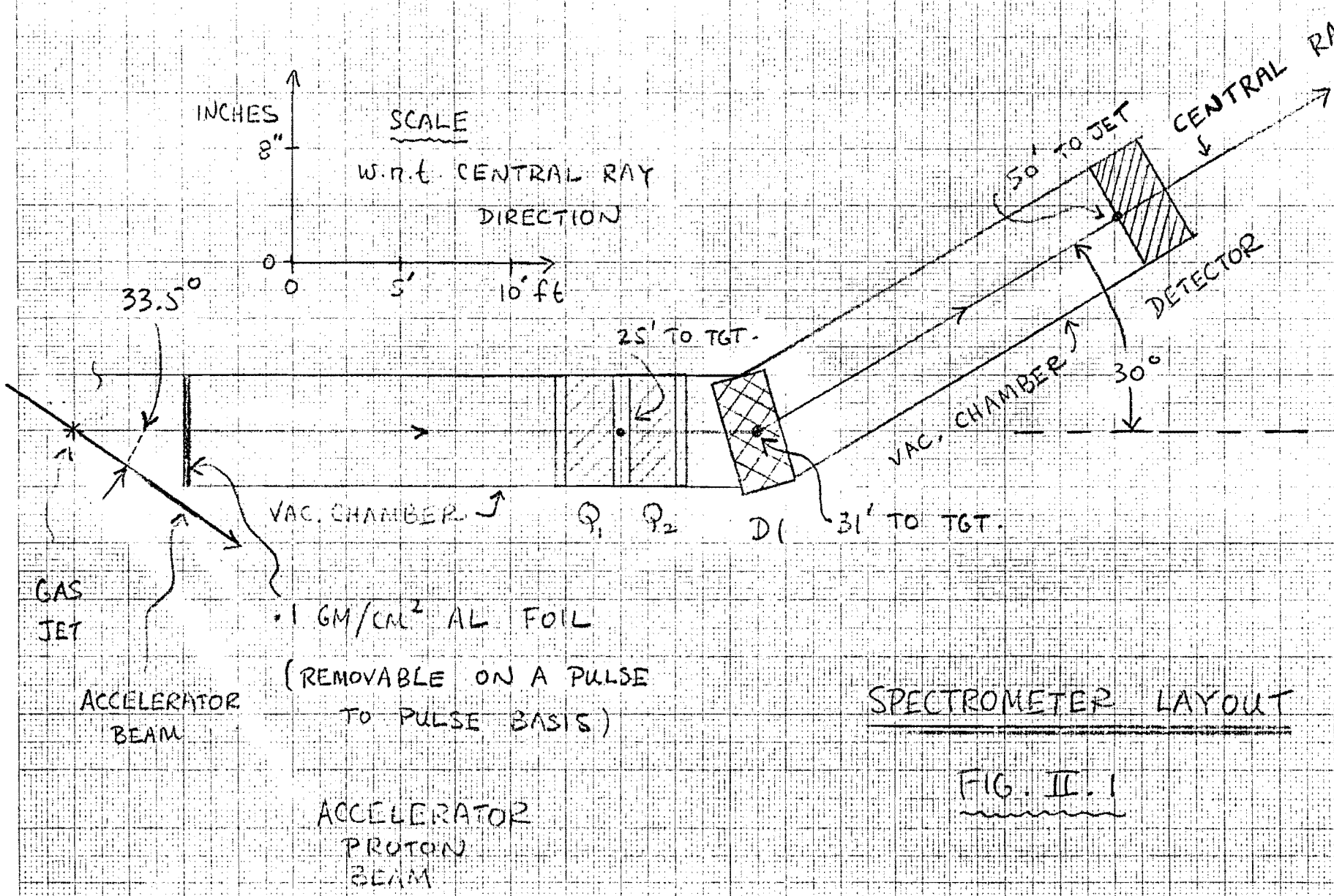

SPECTROMETER LAYOUT

FIG. II.1

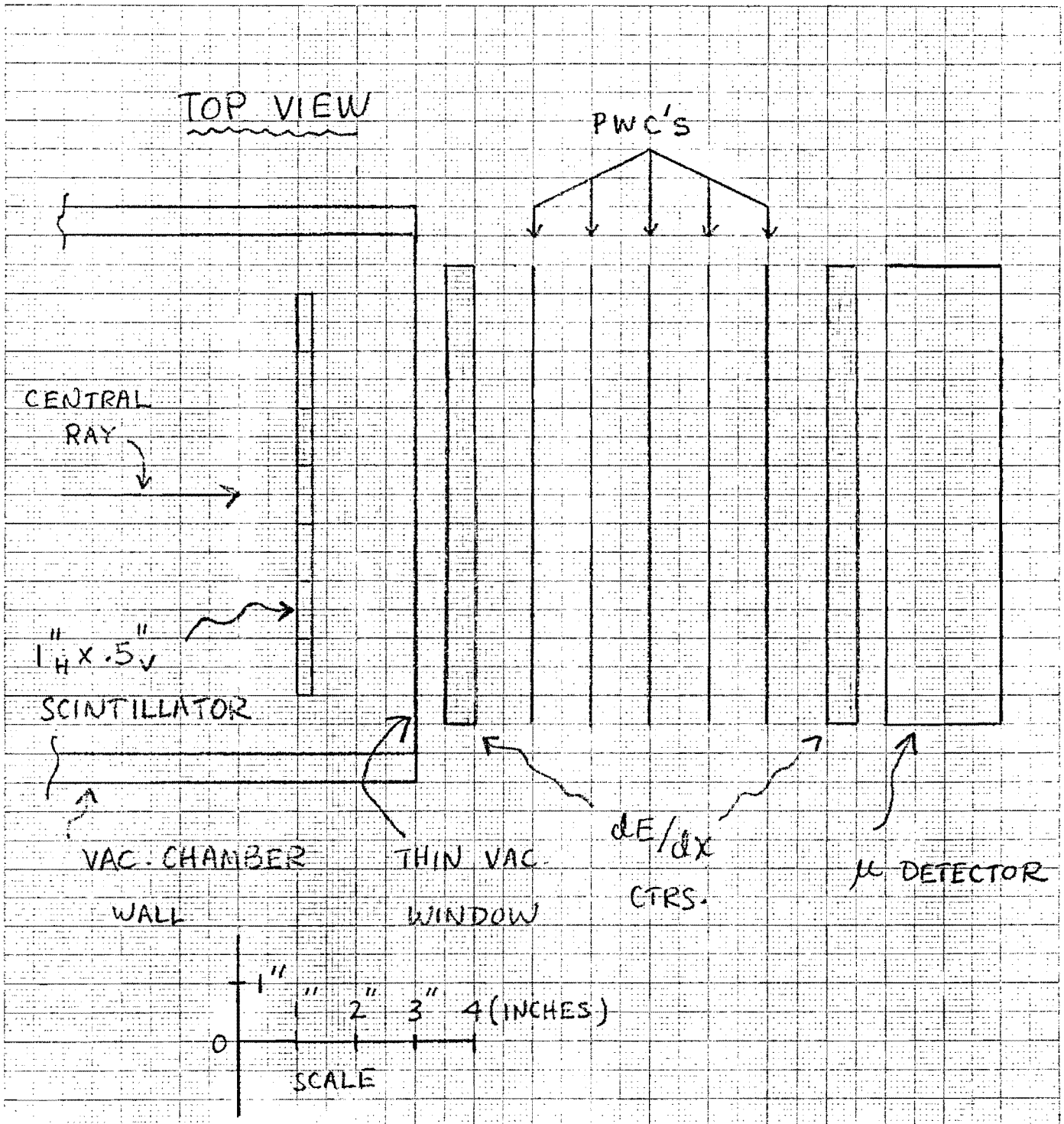

FOCAL PLANE DETECTOR

(SKETCH)

FIG. II. 2

NUB 2303

September, 1976
(English revised October, 1976)

A New Idea for Searching for Free Quarks*

D. Garelick

Northeastern University at Boston, Boston, MA 02115

ABSTRACT

The possibility that free quarks can exist but have gone undetected because they possess a strong long range interaction, SLRI, with normal matter is explored. Experimental checks of this idea are suggested.

* Work supported in part by the National Science Foundation under Grant No. MPS-02059A5.

The quark model[1] for explaining the substructure of the elementary particles (mesons and baryons) has been extremely successful. However, it remains somewhat difficult with this model to understand why free quarks have not been observed. The currently accepted idea is that quarks are produced but <u>always</u> recombine with quark anti-quark pairs produced out of the vacuum at the point the interaction takes place. Thus, only mesons and baryons, rather than free quarks, are observed. In this paper, I explore the possibility that indeed single free quarks, q_f, (and anti quarks, $\bar{q}_f$) can sometimes be produced but have escaped detection because they possess a strong long range interaction, SLRI, with normal matter.

According to this SLRI hypothesis, what happens to free quarks after they are created? For simplicity, suppose that a pair of free quarks are produced in a e^+e^- collision in a machine such as SPEAR. In this case, each member of the pair, $\bar{q}_f$ (or q_f), could propagate through space until the SLRI causes it to pick up one (or two) quark(s) from one of the nucleons contained in the first bit of nuclear matter encountered along its path. More specifically, the anti quark $\bar{q}_f$ would pick up one quark to form a meson ($q\bar{q}$), and the quark would pick up two quarks to form a baryon (qqq). If this picture is correct, then free quarks could have escaped detection in all experiments to date.

The most obvious implication of these ideas is that in e^+e^- collisions it is possible that events exist in which free quarks are produced via the reaction:

$$e^+ + e^- \rightarrow q_f + \bar{q}_f$$

and are sometimes converted to mesons and baryons (clothed) in the matter

located immediately outside the interaction region (e.g., the vacuum pipe). This suggests that there should appear an excess of hadron jet-like events where both (back to back) hadron jets of the event appear to originate in the walls of the vacuum pipe surrounding the interaction region.

Obviously, in order for free quarks to have escaped detection in experiments performed at conventional and at storage ring accelerators the effective interaction length, λ_f, for the pickup reactions which convert free quarks to mesons and baryons must be quite small. The fact that no evidence for free quarks has been found in bubble chamber photos suggests $\lambda_f < .05$ g/cm^2. For $\lambda_f < .05$ g/cm^2 other accelerator type experiments would have failed to detect free quarks since the quarks would be converted to mesons and/or baryons in the production target or in the early stages of the detector.

If the above ideas are correct, the free quarks can be directly observed by:

1) Producing them in colliding beam machines or in collisions between a low density fixed target (e.g., a gas jet) and an accelerator beam.

2) Measuring the free quark charge to mass ratio by employing the time of flight technique (beams with r.f. structure) for measuring their velocity and measuring their charge to momentum ratio with a magnetic spectrometer in which the material between the production point and the spectrometer focal plane is much less than λ_f, where $\lambda_f < .05$ g/cm^2.

If such experiments do directly observe quarks, there would remain a number of unanswered questions. For example, if quarks are fractionally charged,

why have they not been found in Millikan-type oil drop experiments.[3]

In summary: this paper points out the possibility of observing particles, quarks, which possess a strong long range interaction with normal matter.

I thank T. Ferbel and M. Glaubman for helpful comments.

REFERENCES

1) A. DeRujula, H. Georgi, S. L. Glashow, Phys. Rev. D12 147 (1975) and references cited therein.

2) Most of the arguments and conclusions of this paper remain unaltered if the free quarks do not undergo the suggested pickup reactions but instead have an anomalously large energy loss per g/cm^2 as a result of a SLRI such that they are brought to rest in a distance less than λ_f.

3) Another example of an unanswered question for SLRI type quarks is:

Why has there been no apparent violation of charge conservation observed in bubble chamber photographs as a result of SLRI type quark production?