553

Fermilab Proposal No.

Scientific Spokesperson : L. N. Hand
Cornell University
607-256-3455

A PROPOSAL TO SEARCH FOR SHORT-LIVED PARTICLES PRODUCED BY ANTINEUTRINOS AND NEUTRINOS

May 6, 1977

E. M. Friedlander
L. N. Hand
P. Karchin
H. Weiner

Laboratory of Nuclear Studies
Cornell University
Ithaca, N. Y. 14853

B. Andersson
B. Jakobsson
R. Kullberg
B. Lindkvist
I. Otterlund

Institute of Physics
University of Lund
Lund, Sweden

W. E. Cleland
W. E. Cooper
E. Engels, Jr.
P. Rapp
P. Shepard
J. Thompson
V. Umaly

Department of Physics and Astronomy
University of Pittsburgh
Pittsburgh, Pa. 15260

R. Holynski
A. Jurak
S. Krzywdzinski
G. Nowak
H. Wilczynski
W. Wolter

Institute of Nuclear Physics
Krakow, Poland

R. Bell
W. R. Frisken

Department of Physics
York University
Toronto, Canada

TABLE OF CONTENTS

		Page
A.	Summary	1
B.	Scientific Justification	2
C.	Description of the Experiment	3
	1. Event rates, total protons required, backgrounds	5
	2. Proposed method for obtaining high tagging efficiency	8
	3. Design of a modular nuclear emulsion target	8
	4. Determination of ultrashort lifetimes	16
	5. Electron/photon shower calorimetry	18
	6. Hadron calorimetry, neutral hadron detection and muon identification	18
D.	Personnel, Cost of the Experiment	21
E.	Time Scale of the Experiment; Division of Responsibilities; Additional Collaborators	25

APPENDICES

I.	Detection of Very Short-Lived Decays in Nuclear Emulsions	26
II.	X-Ray Marking Technique	32
III.	References to Previous Publications by Others Relevant to This Proposal	33

A. SUMMARY OF THE PROPOSAL

We propose to use a hybrid emulsion-visual detector to search for massive weakly-decaying particles produced by antineutrinos and neutrinos with $E_{\bar{\nu}} > 60$ GeV. A small number of events is sufficient to establish the existence or nonexistence of lifetimes in the range $c\tau > 0.1\mu M$. Although our experiment will simultaneously observe charm production the thrust of our proposal is the search for the "next generation" of flavor and/or heavy leptons. In addition to measuring the lifetimes of these states, if they exist, we can place a lower limit on their mass. The lifetime range presently explored can be extended down to 3×10^{-16} seconds if the new states of matter are copiously produced.

A combination of plastic flash tube chambers and small spark chambers connected to the emulsion target modules is used to locate the events in the emulsion.

The principal features of our experiment are:

a) measurement of very short lifetimes ($c\tau < 1\mu M$)

b) a small scanning volume in the emulsion (< 0.1 mm^3)

c) a hadron calorimeter which provides visible track information

d) a thin nuclear emulsion target to reduce thick target effects, and

e) a relatively inexpensive apparatus

The experiment can be installed January 1, 1978 and will be ready to run March 1, 1978. About 4×10^{18} protons are required if the double horn is used. Data analysis will be completed in one year.

B. SCIENTIFIC JUSTIFICATION

B1. Goals of This Experiment

The goal of this experiment is to search for weakly decaying heavy particles produced by antineutrinos and neutrinos. A secondary goal will be to study the origin of the dominant source of dilepton events by direct observation of the decay vertex.

B2. Historical Origins of This Experiment

The suggestion to use nuclear emulsion as a target in a neutrino beam was carried out in a pioneering experiment[1] by E.H.S. Burhop (Univ. College London) and collaborators at CERN in 1960. The first observation of an example of a particle lifetime in the sub-millimeter range produced by neutrinos was by Burhop, Conversi, Read and collaborators at Fermilab in November 1976.[2] The interpretation of this event is still at this time open to question, however, it is probably a charmed baryon decay.[3]

B3. The Search for New Flavors (or Heavy Leptons)

A calculation by Peskin and others[4] gives a prediction of the lifetime of a weakly decaying meson containing a heavy (mass > charm) quark. Figure 1 shows the decay rate plotted versus the quark mass. This calculation uses conventional assumptions in relating the lifetime to a multiplicative factor times the rate for muon decay. A meson of mass ~ 5 GeV/c^2 will decay with a rest frame lifetime (expressed as a length) of $c\tau < 1$ micron. For a 2 GeV/c^2 particle the same general calculation gives $c\tau \sim 100$ microns.

Schrock and Albright have shown[5] that the existence of "b" (bottom) quarks together with right-handed currents is consistent with the observations

in antineutrino data of a "high-y" anomaly and an increase in $\sigma(\bar{\nu})/\sigma(\nu)$ at higher energies. The study of $\bar{\nu}$ events in nuclear emulsion for $E_{\bar{\nu}} > 60$ GeV should enable us to separate the decay vertex from the production vertex in individual eventsand thus to isolate and study the decays of these higher mass states if they exist.

C. DESCRIPTION OF THE EXPERIMENT

The experiment consists of an emulsion target irradiated by a beam of antineutrinos and neutrinos, followed by a downstream spectrometer/cascade shower detector. A plan view of the apparatus is shown in Figure 2. A 15 liter nuclear emulsion target located at the upstream edge of the magnetic field serves as a track sensitive target with spatial resolution in the submicron range. The extremely short-lived particles being sought are identified by the observation of a decay vertex spatially separate from the production vertex for the event in question. The downstream spectrometer/ shower detector provides a crude determination of the energy in the hadronic shower and some momentum information on individual tracks as well. In particular, the muon produced in a charged current event is identified, and its sign is determined,in this part of the apparatus. The magnetic field volume is 2.4m x 1.5m x 0.6m and the field in the central part of the magnet is 8kg.

(The poleface area is 2.4 x 1.5 m^2 and the poles are 0.6m apart). The emulsion target is divided into two planes, each consisting of an array of removable target subassemblies described in sections C2 and C3 below. A flashtube chamber[6] is placed immediately downstream of each emulsion plane. More flashtube chambers are placed in the magnet gap and further modules serve as the active elements of the shower detector. The spatial resolution of the flashtube chambers is sufficient to allow momentum determination to an accuracy

$\Delta p/p = p\ (GeV)/20$ and also to yield some directional information on hadronic showers. The flashtube chamber located inside the magnet gap also contains a glass plate spectrometer of the type introduced by Apostolakis and MacPherson in 1957[7] and later used by Alvarez, Heckman, Golden and collaborators for cosmic ray rigidity measurements.[8]

The central problem in the design of this experiment is to connect the large spatial scale of the spectrometer/shower detector to the microscale of the emulsion target. The first step is to keep the emulsion thin (1cm, 1/3 radiation length) in order to minimize thick target effects such as secondary electromagnetic shower production in the emulsion itself (from π^0 zeros). The second step is then to locate events by a three stage process that works back from the flash tube chambers with their spatial resolution of 0.5cm via an evaporated gold self marking minispark chamber[9] located directly in the target subassembly and a glass plate coated with emulsion on both sides. This allows us to extrapolate to a region in the emulsion target proper whose transverse size is a few times the microscope field of view at high magnification and with a "search volume" $< 0.1\ mm^3$ (compared to $> 200\ mm^3$ in E247).

In the sections below and in the appendices, more details of the experimental design are discussed. The decision whether to use vertical or horizontal orientation of the emulsion will ultimately be made on the basis of our current M5 test beam studies, but it appears that the vertical orientation is preferable for our geometry and in order to keep the emulsion target thin in the beam direction. The effects of emulsion shrinkage after processing are more easily handled with a vertical exposure.

C1. Event Rates, Background, Total Protons on Target

We assume there are two planes, each an 8 x 45 array of 2 inch (diameter) cylinders of emulsion. The emulsion thickness is 1cm in the beam direction. The total amount of emulsion physically in the target is 14.6 liters. If a 3 mm border around the outer rim of each cylindrical target is not analyzed (to avoid problems with distortion) we have an effective target volume of 12.9 liters.

We have taken as our primary goal the achievement of 10 $\bar{\nu}$ charged current and 4 $\bar{\nu}$ neutral current events having $E_\nu \geq 60$ GeV. The number of 400 GeV protons on the target needed to accomplish this goal depends on the type of neutrino beam used.

The flux curves used were those of Stefanski and White (FN-292)*. To convert these numbers into units useful for our purposes, the fluxes were weighted by the cross section which was assumed to be $0.74 \times 10^{-38} E_\nu$ (GeV)cm^2 for neutrinos[10] and one half this for antineutrinos[11] (this over estimates the low energy $\bar{\nu}$ events by $\sim$ 25%). We could then plot the calculated fluxes as an event rate/liter of emulsion/10^{18} protons. This is done for various beams in Figure 3 . The curves shown are integral curves, i.e., total events above $E \geq E_{min}$.

As a check we used these curves to estimate the expected rate in E247 which received 1×10^{18} protons and had a target of 18.6 liters of nuclear emulsion. The beam used was the double horn.

---

*Beams used in this calculation, in the numbering scheme of Stefanski and White in FN-292:

Bare target	$\bar{\nu}$: 7	
Double Horn	$\bar{\nu}$: 19	ν: 18
Triplet	$\bar{\nu}$: 37	ν: 36

From our curve there were 9.88 events/liter/10^{18}p so there should have been a total of 184 events, a number which is consistent with the number actually observed in the spark chambers.

We multiply the rate/liter by 12.9 to calculate the rate/10^{18} protons for our experiment in various beam configurations.

To estimate the number of protons required, we multiply by the geometric factor 0.84 because the experiment is located in back of Lab C and by the overall detection efficiency for analyzable events (0.60). Using the numbers from Table C1.I and these efficiencies, we can make Table C1.II.

It appears that our goal could be achieved best with the double horn beam running in 1 running period of 4 months (4 x 10^{18} protons on the neutrino target). Preliminary running could be done with almost any beam. If the short spill of the double horn is a problem, then the triplet may be preferable, but the run will take longer.

The major background is from cosmic rays. We take the estimates given in the proposal P531 (U. Washington-Krakow). They estimated the number of cosmic ray induced events to be 1.3/cm^3/day, so in 4 months we would expect to have 160 cosmic ray nuclear interaction stars/cm^3. Our scanning volume is sufficiently small so that this is not a problem. An additional safety factor is that few of these interactions will resemble the electronic information about the event.

Cosmic ray muon tracks are potentially more serious. About 120,000 tracks/cm^2 will accumulate in 4 months. E382 handled 500,000 tracks parallel to the beam direction without major problems in the event reconstruction. Monte Carlo studies indicate that coated glass plates can be left in place for a minimum of 1 month in the vertical position without serious problems, and quite possibly longer.

TABLE C1.I

Beam	Total Event Rate* (at 15' BC)	E ≥60GeV
1. Double Horn		
ν	127.6	46.0
$\bar{\nu}$	30.7	5.3
2. Bare Target		
$\bar{\nu}$	7.0	1.8
3. Triplet		
ν	30.2	21.4
$\bar{\nu}$	3.82	2.09

*per 10^{18} protons in 12.9 liters of emulsion

TABLE C1.II

Beam	Required Number of 400 GeV Protons† For 10 $\bar{\nu}$ Events ($E_{\bar{\nu}} \geq 60$ GeV)
1. Double Horn	3.7×10^{18}
2. Bare Target	11×10^{18}
3. Triplet	9×10^{18}

†After geometric and tagging efficiency corrections

Backgrounds from the neutrino beam should be negligible, particularly since the calorimeter allows the selection of events with more than several GeV.

Our choice of the rear of Lab C as the location for the experiment removes any possibility of accidental exposure of the emulsion with hadron beams to the Bubble Chamber.

C2. Proposed Method for Achieving High Tagging Efficiency

The location of events is achieved by finding tracks in detectors of gradually increasing spatial resolution.

By this procedure we hope to achieve at least 60% tagging efficiency without overly lengthy scanning for events. Experience on this can and will be gained in the M5 test beam.

The Table C2.I gives the sequence of steps involved in searching for events.

C3. Design of a Modular Nuclear Emulsion Target

a) Choice of Emulsion Target Thickness

The primary consideration in designing the emulsion target is the reduction of thick target effects. A plot of the distribution along the beam direction for events found in the emulsion was shown in a seminar given in November 1976 at Fermilab by A. L. Read. The 16 events found at that time were strongly clustered in the downstream half of the 8.5cm emulsion target. Although 28 events have now been found, a recent discussion with E. Burhop revealed that, even with the now considerably more sophisticated software for analyzing the spark chamber information, this non-uniformity of successfully tagged events persists.

TABLE C2.I

Detector	Resolution	Purpose
Flash Tubes	$\leq$ 1cm	Reject non-emulsion triggers Choose cylinder to be removed
"Holey" Spark Chambers	<200μm	Find search areas for glass plates coated with emulsion
Double-Sided Emulsion-Coated Glass	< 2μm	Find $\geq$ 2 tracks for extrapolation to the event

It is possible that this problem is caused by the presence of secondary hadron interactions leading to false predictions about the location of the event, or by low energy particles from electromagnetic cascades. (There are $\sim$ 8 gamma rays/event and the radiation length in nuclear emulsion is 3cm). Some evidence that the latter could be the problem is offered by the fact that 80% of the successfully found events in E247 have particles penetrating into the narrow gap spark chambers, and therefore are presumably high energy particles, while only 40% of the overall event sample has 2 or more penetrating particles.[11a] A full understanding of the nature of the low E247 efficiency does not yet exist, but certainly will exist in time.

On the basis of Monte Carlo shower development calculations, we have chosen the thickness of the emulsion to be 1 centimeter. The choice of such a thin target probably dictates the use of a vertical exposure which, however, has other advantages. We regard the choice of vertical versus horizontal as still an open question, however, but strongly favor the vertical exposure.

Crudely we deduce that even with only 1 centimeter of emulsion, photon conversions should occur in, on the average, $8 \times \frac{1}{6} \times \frac{7}{9} = 52\%$ of our events. Almost all of the showers occurring will contain a single pair, as can be seen from Table C3.I.

Since many of these events which do give showers will have at least one low energy electron emerging (not to mention δ-rays which will occur $\sim$ several % of the time/charged particle), it will be necessary to study the appearance of typical events in the flash tube detector immediately downstream of the emulsion target. This will be done using the M5 test beam setup we have already been using to prepare this proposal. The number of gm/cm^2 required and the "granularity", as well as the thickness of this detector, will be studied in the next several months using 50 GeV pion induced events to simulate neutrino events. In particular, we must decide whether to use smaller (than 5mm) flash tubes.

TABLE C3.I

Typical Shower Multiplicities for Electrons and Photons

Emulsion thickness:	1.5 cm		3.0 cm	
500 MeV Electron in;	0	6%	0	15%
	1	85%	1	65%
> 50 MeV Electron out	>1	9%	>1	20%
500 MeV Photon in;	0	70%	0	50%
	1	3%	1	7%
> 10 MeV Electron out	>1	27%	>1	43%

(Numbers are taken from electron-photon shower distribution - Messel and Crawford -- the tables for copper were used).

b) Other Parameters of the Emulsion Target Stack

A two inch diameter was chosen for the individual emulsion targets. The two inch size represents a compromise between a large size which forces us to process more emulsion per event and a smaller size in which a greater percentage of the emulsion is lost due to "edge" effects. Approximately 3 mm on the outer rim of the disk is not useful, due to distortion of the emulsion after processing.

With this choice of diameter, and assuming a 600 pellicle/week processing capacity, we can process 20 events/week or > 300 events in four months (>180 tagged events, if the efficiency is 60%). Although such a processing rate far exceeds the present (E247) rate of finding events, we optimistically hope to improve both the speed and efficiency of event tagging as described in Section C2 above and thus to keep up with the production and processing rate.

About 20 cm^3 of emulsion are processed/event. 300 events is 6 liters processed, or 40% of the target. The rest of the target could continue to be exposed for a longer priod of time until cosmic ray backgrounds become intolerable.

The round disks will be stamped from pellicle sheets. A hexagonal shape would permit closer packing but the target holder would be more difficult to design.

Each target is a cylinder consisting of $\sim$ 30 2 inch (diameter) disks 300μm in thickness. The pellicles will be vacuum packed to ensure close contact. The beam passes perpendicular to the diameter of the disks.

c) The Rest of the Target Module

Immediately downstream of the emulsion stack is a glass disk 1.0 mm in thickness coated on both sides with 100μm (0.1 mm) of G5 nuclear emulsion. Using a long working distance objective, tracks found in the spark chamber

(see below) will be located on both sides of the glass plate. About 20 grains will be visible on each side. Use of the two-sided glass plate permits measurements of track angles to about ±3 mrad -- ample accuracy if two or more tracks are found, for extrapolation to the event in the target stack. Monte Carlo studies have shown that cosmic ray tracks in these plates will not be a problem.

Relative positions of the glass plate and the target pellicles can be found within a few microns by x-raying the stack using a collimator with a fine hole. The technique for doing this has been tested satisfactorily by the Lund group (See Appendix II). Muon beam tracks will be used for the final alignment of the stack.

Following the glass plate is another glass plate coated with evaporated gold, a 1cm gap and a second gold-flashed glass plate. The two plates form the electrodes of a small spark chamber which is pulsed for each event trigger. Provided the spark chamber is properly designed, constructed and electrically pulsed, it will not break down without a track in it. The trigger rate, if similar to E247, will be $\sim$ 10-20 x the actual event rate, so we can expect $\sim$ a few tracks/trigger, spread over the whole apparatus.

Tracks causing a spark will make small holes in the gold coating of the plates. A short test (with aluminum coating) revealed that the mean hole diameter was 200 microns with a tail extending to 700-800 microns Further development work might reduce the diameter of the holes and is under way in the M5 test beam. The background of holes from other triggers will not be serious. The hole diameter corresponds roughly to the field of view of the microscope, so by aligning the two plates under the microscope it should not be difficult to find the track of interest. A test of this will be carried out soon in the M5 beam (see Figure 4).

A second spark chamber located 5cm away permits a more accurate angular measurement on those tracks passing through it.

An exploded view of the target module showing the two spark chambers and the emulsion target is shown in Figure 5. The spacer between the two chambers is made of (conducting) graphite-loaded plastic. This material is used for structural rigidity. It also forms the "hot" electrode of the two chambers. The gap spacer will be made of opaque G-10 to prevent ultraviolet "communication" between different spark chambers.

The entire cylinder, including the emulsion target, forms a self-contained unit which is easily removed from the magnet gap.

There are a total of 720 of these modules in two 8 x 45 arrays filling the gap of the magnet, except for a $\sim$ 10cm border around the outside. Downstream of each of these arrays is a flash tube target about twenty inches along (in the beam direction) also containing a glass plate spectrometer similar to that in the target modules, but with larger plates. The use of the glass plate spectrometer (see Appendix III for previous work by others) ensures that the momentum of tracks emerging from decays thought not to be prompt will be measured precisely. This use of a glass plate spectrometer partially overcomes the conflicting requirements of substantial radiation lengths necessary for good e identification (see Fermilab proposal P520 for a good dicussion of this) and low multiple scattering for precision momentum measurements. The exact design of this part of the apparatus has not yet been determined.

SUMMARY OF SECTION C3: DESIGN CONSIDERATIONS FOR EMULSION STACKS

1) Why are there removable target modules? This gives us immediate feedback during the run, reduces the average cosmic ray background and, with the right stack volume avoids having to develop all of the emulsion. We gain most if the number of events is small. With 75 tagged events 20 cm^3/event means that only 10% of the target needs processing.

2) Why is the thickness of the stack 1 cm? The reasons for this are given above. We feel that the use of thin emulsion stacks is a distinguishing characteristic of this experiment from other proposed or approved experiments.

3) Why 20 cm^2 area? This is a reasonable compromise between edge losses due to distortion and low stack volume/event.

4) Why the choice of a vertical exposure? We are still examining whether a horizontal exposure would be possible without significant increase in wasted emulsion due to edge effects. A 3 mm edge means 60% waste for a 1cm thick horizontal stack and 10% for a 1cm vertical stack. Also the module design is simplified using the vertical exposure. The problem of following tracks in a vertical exposure is removed by using reference muon tracks. Some problems remain, however, which are discussed in Section C4 below.

C4. Determination of Very Short Lifetimes in Nuclear Emulsions

Central to this proposal is the ability to establish the location of a common origin for the tracks produced in an interaction. The goal of this experiment is to determine the location of such a vertex to an accuracy of 0.1μm and the statistical analysis used to achieve this goal is presented in Appendix I.

This Appendix describes the detailed statistical analysis of emulsion grain coordinate measurements and the fitting technique which will be used to detect the presence of decays at distances small compared to the separation between emulsion grains ($\sim$ 5μm). Note that the explicit example of a fit to an actual event from E382 was made with a "horizontal" exposure and that even a single track missing the vertex by 0.2μm would have been easily detected. (0.1μm is detected at the 50% level).

The accuracy with which this technique can be applied depends critically on the transverse distribution of emulsion grains with respect to the actual particle track. This distribution has been extensively studied[12] and is approximately a gaussian with a σ of $\sim$1/4 the grain size (in K5 emulsion, σ= 0.06-0.07μm) plus a tail from δ-rays which can be eliminated before fitting.

Measurements in the focal plane of the microscope can be made with this accuracy, which includes reading error. However, measurements in depth can only be made with an error ten times larger ($\approx$0.8μm).[13] This asymmetry in the error of coordinate measurements means that in a vertical exposure where z is the beam direction, the vertex error in the xz projection is an order of magnitude larger than in the xy projection. As is shown in Appendix I, the degree to which tracks miss the vertex in the xy projection is determined by the production

angular distribution of the heavy meson, while the same measurement in the xz or yz planes is a Lorentz invariant and depends only on $c\tau$. For this reason alone we would choose horizontal exposure, but since all other factors indicate the use of vertical exposure more thought is needed and this remains an unsolved problem, unless we assume large $p_\perp$ production of heavy mesons. Both horizontal and vertical geometries will be tested with pion events in the M5 beam.

C5. Electron/Photon Shower Calorimetry

The electromagnetic showers will be developed early in the graded calorimeter, i.e., in the thin plate section, which consists of 10 plates of 1" Al followed by 20 plates of 1/2 inch thick iron. Each plate is followed by a two dimensional (XY) flashtube chamber module, and the shower energy is determined by counting the number of flashtubes fired. The data presented by Taylor/Walker at the neutrino workshop show that $DE/E = 25$ percent/$\sqrt{E}$ FWHM is readily obtainable. Saturation effects more than two particles firing one tube become noticeable only above 10 GeV and are not serious below 40 GeV.

C6. Hadron Calorimetry, Neutral Hadron Detection, and Muon Identification

Hadronic showers are developed in the heavier downstream region of the calorimeter. This region has 20 modules, each consisting of a 2 inch slab of iron followed by an XY flashtube chamber. (The engineering of these 48 x 120 square inch chambers will be a straightforward application of our experience with the 27 x 37 square inch modules we are currently testing). The readout will be photographic for simplicity, and also to be in keeping with the generally low cost profile of the whole experiment.

This array will detect K_L^0 and neutrons originating in the emulsion and elsewhere, and will also allow muon identification. Simply using the data of Barish (iron/scintillator calorimeter) would give 0.36 percent hadron punchthrough at 50 GeV. However, since we can follow the track of a putative muon through the entire calorimeter, muon identification will be much more positive than this. The absorption length (17.1 cm Fe) can thus be used as an estimator of the fraction of hadrons misidentified as muons. This yields a misidentification probability of 0.06 percent for fast charged hadrons.

The energy and directional resolution of a prototype flashtube chamber calorimeter will be studied in the M5 test beam in May, but some estimates can be made using the work of Gabriel and Schmidt (ORNL/TM 5105, 1976). They show that when appropriate fluctuation correlation corrections are made, the energy resolution depends mainly on the total module thickness (iron plus scintillator). Using their Figure 5 we would expect DE/E = 200 percent/$\sqrt{E}$ (FWHMO with our 40 gms/cm^2 modules. They also indicate a directional accuracy of 100 Mrad (FWHM) for particles detected via the hadronic showers only, and state that considerable improvement is achieved when the particle is tracked into the chamber, or when its origin is known.

The characteristics of the entire graded calorimeter are given in Table C6.II, and details of a module from the hadron region are shown in Figure *. The slabs of scintillators occur in only 2 of the 20 modules, selected to be at the average shower maximum. This allows us to trigger the flashtubes and minispark chambers on events with total hadronic shower energy greater than several GeV.

In addition to identifying and measuring the energy of photons and electrons, in the early thin plate part of the calorimeter, we will also have some identification capability via range for low energy particles. For example, a 600 MeV/c proton just stops in 10 inches of aluminum, and 1.5 GeV/c muons stop deep in the hadronic region of the calorimeter.

*This figure was omitted in the final preparation of this proposal.

TABLE C6.II

Electromagnetic/Hadron Calorimeter Characteristics

Energy resolution (hadrons)	< $200\%/\sqrt{E}$ (but see text) FWHM
γ,e	$25\%/\sqrt{E}$ FWHM
Angular resolution	< 100mr (but see text)FWHM
Number of absorption lengths	7.5
Pion misidentification probability (as μ)	.06%
Number of Plates	10 plates Al (2' x 8' x 1") 20 plates Fe (2' x 8' x 1/2") 20 plates Fe (3' x 10' x 2")

D. PERSONNEL, COST OF THE EXPERIMENT

Personnel:

Cornell

E. M. Friedlander
L. N. Hand
P. Karchin
H. Weiner
+ one more research associate

Lund (Sweden)

B. Andersson
B. Jakobsson
R. Kullberg
B. Lindkvist
I. Otterlund

Pittsburgh

W. E. Cleland
W. E. Cooper
E. Engels, Jr.
P. Rapp
P. Shepard
J. Thompson
V. Umaly

Krakow (Poland)

R. Holynski*
A. Jurak
S. Krzywdzinski*
G. Nowak
H. Wilczynski
W. Wolter*
+ 4 full-time scanners

York (Canada)

W. R. Frisken

*These physicists have additional research commitments

Cost Estimates

a)	Emulsion $4512/liter (gel) 15ℓ	$ 67.7K
b)	Processing 1.5ℓ (10%)	6.8K
c)	Fabrication of 24K pellicles (8 man months est.)	8.0K
d)	Fabrication of double sided glass plates (labor and materials)	6.0K
e)	Target cylinders	5.0K
f)	Target cylinder mount	3.0K
g)	Gas recirculator	exists
h)	Flash tube power supply	exists
i)	Calorimeter polypropylene (materials)	1.0K
	fabrication	15 K
j)	HV pulsing for calorimeter: strip lines and spark gaps	15 K
k)	Calorimeter and veto counter scintillator, phototubes, , power supplies	exists
l)	Optics: cameras, camera controls	exists
	bases, mirrors, field lenses, materials	2 K
	labor	5 K
	film processing at Argonne or BNL	1 K
m)	Target flash tube chambers - materials and assembly	5 K
n)	Disassembly of Cornell magnet and transportation costs to Fermilab	5.5K

Fermilab Support Requested

o)	Rigging, assembly of magnet, power connections temporary building, etc.	
p)	Iron for calorimeter Aluminum for calorimeter	see next page
q)	Prep requests	40 K

Division of Costs (Letters below refer to items above)

1. National Science Foundation (Cornell/Pitt)		
a, d, e, f, l, n, 1/2 of m	100 K*	
2. Swedish National Research Council (Lund)		
b, c	15 K	
3. National Research Council of Canada and Canadian Institute of Particle Physics (York)		
i, j, 1/2 of m	36K	
4. Fermilab Support		
o, p, q	165K	
Total Cost of the Experiment		$ 316 K

Operating costs, travel costs, and analyzing costs are not included in the above. Most of these latter costs are covered under existing grants.

Funds to support the Krakow and Lund scientists in the U.S. and to pay for their travel from Poland and Sweden, will be requested from the NSF.

*Approximate new funds to be requested, not including overhead salaries, etc.

Fermilab Support Request (Partial)

		$ K
Metal Building		
30' x 30' x 16' high aluminum clad building, flat roof, matching Lab "C", concrete foundation, floor 5' below beam line.		
Site work; relocate ICW line, regrading	4.0	
Concrete foundation, floor, excav. 900 @ 4.5	4.0	
Building structure, doors, roof 900 @ 27) Lighting @ 6) Heating and ventilation @ 4)	33.0	41.0
Electronics Enclosure (Portakamp)		
12' x 30' x 8' portakamp less power, cooling, heating. (If new unit bought)	(6.0)	
Power package, wiremold, transf. & panels, lights	4.0	
Air conditioning, ducts over electronics	3.5	
Halon System, detectors	3.0	10.5
Facilities and Services		
Primary power from Subst. NL-12 800 kva, 1000A Swbd. 2-5" conduits, 6-750 mcm 120' @ 85	10.0	
LCW piping from Lab "D" 2-2" copper, direct bury 400 kw 190' @ $35	6.5	
Communication ducts from Lab "A" 2-4" 120' @ 8.0	1.0	
Paving, curbing repair, misc.	1.0	18.5
Experimental Equipment		
Cornell Magnet, 80 tons, 5 trucks ship at .8	4.0	
Off load, rig and assembly 10 days @ .8	8.0	
Connect power, control, power, 6 days @ 6	3.5	
Transrex Power Supply (if new unit)	(18.0)	
Aluminum Calorimeter plates 10- 1" x 3' x 9' 3400 # @ 1.25	4.5	
Steel Calorimeter plates, 20-1/2" x 3/5' x 9.5' plus 20 - 2" x 4' x 10' 47.5 tons @ 380	18.0	
Base frames for three calorimeter stacks	6.0	38.0
Total		108.0
15% contingency		17.0
TOTAL		$125.0 K

Cost estimate by Wayne Nestander, Neutrino Lab, Fermilab

E. TIME SCALE OF THE EXPERIMENT, DIVISION OF RESPONSIBILITIES; ADDITIONAL COLLABORATORS

July 1, 1977	Approved by PAC and Laboratory
October 1, 1977	Agreement signed Cornell magnet available
November 15, 1977	Cornell magnet arrives at Fermilab, installation begins
December 1, 1977	Emulsion target production starts. Installation of calorimeter and target begins.
March 1, 1978	Data run begins
July 1, 1978	Data run ends
July 1, 1979	Data analysis completed

Division of Responsibilities on the Experiment

Cornell (LNS)	Loan of magnet to Fermilab; moving of magnet
Cornell/Pitt/York	Emulsion target, target flash tubes, glass spectrometer
Pitt/York	Flash tube hadron calorimeter, scintillation counters, optics, photographic equipment
Cornell/Lund/Krakow	Emulsion target fabrication, x-ray marking, event searching, event reconstruction
Lund	Emulsion processing
All	Data analysis

Additional collaborators from Fermilab would be welcome.

APPENDIX I

Detection of Very Short-lived Decays in Nuclear Emulsions

Production of heavy and very short-lived ($< 10^{-12}$s) new particles in high-energy neutrino interactions may be expected to be revealed either by the decay in flight of such objects or by their trapping in a nuclear fragment with subsequent disintegration (in flight or at rest) of this fragment ("superfragment").

In either case the flight paths involved are so small ($< 1\mu m$) that they are usually drowned in the large cluster of grains around the interaction vertex, due to the combined ionizing action of all outgoing tracks and their δ-electrons. Thus the decay point is not directly observable and its existence and position must be inferred from the failure of all tracks to extrapolate to a common vertex.

We propose to measure the position of all grains (accessible to measurement within one field of view) on all relativistic tracks.* The procedure for finding a vertex or detecting two vertices (production and decay) can be summarized as follows:

1) The projected angles ψ_j ($j = 1, 2 \ldots m$) of all measured tracks are estimated from the grain coordinates x_{ij}, y_{ij} ($i = 1,2\ldots n_j$ where n_j is the number of grains recorded on track #j) by a "balanced" least squares fit.*

$$\tan 2\psi_j = 2 \frac{\mathrm{cor}(\xi,\eta)}{\mathrm{cor}(\xi,\xi)-\mathrm{cor}(\xi,\eta)} \qquad (1)$$

where $\xi_{ij} \equiv x_{ij}-\bar{x}_j$, $\eta_{ij} \equiv y_{ij}-\bar{y}$ (1')

2) An arbitrary pseudo-vertex is assumed to exist, somewhere in the clogged region, at coordinates (x_o, y_o). Straight trajectories at angles of ψ_j are assumed to emerge from this pseudo-vertex and "deviations"

*NSF funds have been obtained at Cornell to do this with modern electronic techniques.

$$\Delta'_{ij} \equiv (x_{ij}-x_o)\sin\psi_j - (y_{ij} - y_o)\cos\psi_i \tag{2}$$

are calculated for all grains.

The test criterion will be

$$H^2 \equiv \sum_{j=1}^{m} \sum_{i=1}^{n_j} \frac{\Delta_{ij}^2}{\sigma^2} \tag{3}$$

where σ is the r.m.s. deviation of estimated grain centers about the true particle trajectory. (In K-5 emulsion 0.06 μm < σ < 0.07, reading errors included).

Now once (x_o, y_o) represents only a pseudo-vertex the Δ'_{ij} will differ from the "true" deviations Δ_{ij}

$$\Delta'_{ij} = \Delta_{ij} + \lambda_j \tag{4}$$

where λ_j is the offset at the origin of track j. (Trajectories passing through the vertex have obviously $\lambda_j = 0$).

3) The whole clogged region is now scanned ($x_o y_o$ are varied in steps as small as 0.01μm) and a minimum is sought for H^2. Since by virtue of the least squares procedure

$$\sum_{i=1}^{n_j} \Delta_{ij} = 0 \tag{5}$$

it follows that

$$H^2 = X^2 + \frac{1}{\sigma^2} \sum_j \lambda_j^2 n_j = X^2 + T^2 \tag{6}$$

where $$X^2 \equiv \Sigma \Delta_{ij}^2/\sigma^2 \tag{3'}$$

is distributed like X^2 with

$$\nu \equiv \sum_{j=1}^{m} (n_j-2)$$

degrees of freedom.

If a single vertex exists, at, say, (x_c,y_c) the second term in eq. (6) must vanish as soon as $x_o = x_c$, $y_o = y_c$, and we expect H^2 to behave as X^2.

If, however, <u>at least one track</u> misses the vertex, then, because of the quadratic dependence on the λ_j^2 a non-vanishing second term (T^2) will persist in eq. (6) over the whole area and, provided the λ_j are not too small as compared to σ it will predominate. If we define a figure of merit

$$f \equiv \frac{H^2-\nu}{\sqrt{2\nu}} \qquad (\nu = \text{number of degrees of freedom } -2) \qquad (7)$$

(If $H^2 = X^2$ this is a normal variable of zero mean and unit variance), failure of f to drop, say, below 3 <u>anywhere</u> in the search region will be evidence for at least one non- copunctual track. (See Figure 7 for an example of this procedure)

Table App. 2.I , below, shows the result of a Monte-Carlo simulation. "Stars" of five realistic tracks (with a gaussian Δ -distribution and an exponential gap distribution) were generated with angles uniformly distributed within $\pm 20^o$ of the beam direction(mean angle $\sim 12^o$ corresponding to isotropy in the cms of a 40 GeV collision).

The central track was given an offset λ_3 of 0, 0.1, 0.2, or 0.3 μm. Values of f_{min} were obtained for all 5 combinations of four tracks

<u>Table App. 2.I</u>

λ(μm)	f_{min}
0	.63 ± .09
0.1	4.3 ± .6
0.2	11.5 ±1.6
0.3	43.7 ±2.5

In all cases the track quartet not including the track with $\lambda \neq 0$ had f_{min} obeying the same distribution as for the case $\lambda = 0$, while all other combinations had large f_{min}- values. For $\lambda = 0.1$ μm, 63% of all f_{min} were >3. For $\lambda \geq 0.2$, all $f_{min} > 3$. It is obvious that detection of offsets $\lambda \geq 0.2$ presents no difficulties at all, and a sizable fraction of cases with λ as low as 0.1 are detected, too.

In order to gain an idea about the sensitivity of the method to spontaneous particle decay, we consider the case of two body decay of a neutral short-lived particle. Then, generally speaking, two tracks will have $\lambda_j \neq 0$. Let ℓ be the projected flight path and θ_j the projected emission angles of the decay secondaries (measured from this flight path). Then the second term in eq. (6) becomes

$$T^2 = \frac{\ell^2}{\sigma^2} \sum_{j=1}^{2} \sin^2\theta_j n_j \tag{8}$$

The significance of T^2 is different for "horizontal" and "vertical" exposures (neutrinos incident along the plane of the emulsion or perpendicular to it).

In the "horizontal" case* it can be shown that

$$\langle T^2 \rangle \sim \frac{n}{3} \left(\frac{cT_o}{\sigma}\right)^2 \tag{9}$$

where T_o is the mean lifetime of the decaying object and $n_1 = n_2 \equiv n$ has been assumed. This is independent of the momentum P of the decaying object since Lorentz dilation of ℓ is canceled by the Lorentz narrowing of emission angles.** For isotropic decays $T^2 > \langle T^2 \rangle$ in 58% of the events.

*The effects λ_j are determined by the decay angles θ_j

**Hence neither production nor decay kinematics affect $\langle T^2 \rangle$

In the "vertical" case the λ_j are determined essentially by the production kinematics of the decaying object

$$T^2 = \left(\frac{cT_o}{\sigma}\right)^2 \left(\frac{P_T}{M^*}\right)^2 \sum_{j=1}^{2} \sin^2\psi_j \, n_j \tag{10}$$

where P_T is the transverse momentum of the decaying object of mass M^* and the ψ_j are now <u>azimuthal</u> (hence <u>large</u>) angles (Lorentz invariant!).

If production of massive particles is connected with large momentum transfers we expect P_T to be not much smaller than M^* and the sensitivity described by eq. (8) could be equal, if not larger than in the "horizontal" case (eq. (9)).

Technically, "vertical" exposures imply more involved measurements to compensate for the finite depth of focus of high-power objectives and distortions which affect strongly dipping tracks. A certain muon background ($\sim 10^4 cm^{-2}$) would not only be tolerable but also beneficial, since it provides calibration in the same field of view.

Figure shows the result of a search for a single vertex in a typical event. This event is an actual event taken from the muon experiment E382. There the tracks were comparable with a single vertex ($f_{min} \simeq 0.3$). The small semiaxis of the X^2 ellipse is ~ 0.2 μm (3 standard deviation!) and gives an idea about the resolving power of the method.

It can be shown that the shortest lifetime which would "obliterate" the "X^2-hole" in Fig. with ~58% probability is given by

$$cT_o \approx \left(\sqrt{\frac{3}{n}\,(3\sqrt{2\nu} + \nu}\right)\sigma \tag{11}$$

With concrete numbers $c\tau_0$ turns out to be of the order of 0.1μm, or τ_0 3.10^{-16}.

Once a "negative" test result*) has been obtained, the tracks are split into two groups in all possible ways until two vertices (two "X^2-holes") emerge. The decay path is then estimated from the distance between the points at which H^2 reaches its minimum for each group of tracks.

Technically, all depends on keeping σ at the "sub-(0.1μm)" level. The main obstacles in the path of such a measurement are strange noises and, above all, thermal noises, connected with different dilatation coefficients of parts of the measuring system. Intermediate microphotographs have been shown to be free of these spurious effects to a large extent.

The large amount of measurements involved, especially in the case of a "vertical" exposure can be handled efficiently only with a computer controlled, digitized, semiautomatic microscope. Such a device is in construction at Cornell University under an NSF grant.

*) Of the zero hypothesis that there <u>is</u> a single vertex

Appendix II

X-Ray Marking

The marking method outlined for this experiment will allow the positioning of a pellicle to the rest of the emulsions in the stack to better than 10μm.

A gold-platinum collimator giving three circular-shaped x-ray beams perpendicular to the emulsion surface is used. Two of the beams give marks with ∿500μm diameter. Those marks will make it easy to find the position of the third beam which gives a circular-shaped dot with a diameter of only ∿50μm. The x-ray marking will be made of three different positions of the stack (Fig. 8). The centre of a small dot can be defined better than a few μm. Thus, the three dots will define the position of the pellicle in the stack accurately.

Appendix III

References to Previous Publications by Others Relevant to This Proposal

1. Tagged Nuclear Emulsion Experiments

With Neutrinos:

a) E.H.S. Burhop et al., Nuovo Cim. 39 (1965) 1037

b) E.H.S. Burhop et al., Physics Letters 65B, 299 (1976)

Other:

a) Dayon, M., JETP 37 4, 906 (1959)

b) Proceedings of the 9th Int. Conf. on Cosmic Rays V2, 827 (1965) K. Pinkau et al., p. 821; Yu Smorodin et al, p. 827; N.L. Grigorov, p. 851

For later work see Golden et al., ref. Appendix III and numerous other articles.

2. "Holey" Spark Chambers

a) L. Hand, Neutrino Workshop, April 22, 1977

b) J. Fischer and G. Zorn, pg. 281, Proc. of an Int. Conf. on Instr. for High-Energy Physics, LRL 1960

c) See also A. A. Tyapkin, pg. 270, Berkeley Conf. 1960, for a useful discussion

References c. and b. were supplied to us by Dr. L. Voyvodic of FNAL.

3. Glass Plate Spectrometer

a) A. J. Apostolakis and I. Macpherson, Proceedings of the Physical Soceity, A, vLXX, 146 (1957) and 154 (1957)

b) L. Alvarez, et al., Sixth International Conference on Corpuscular Photography, 1966

c) R. L. Golden, et al., Nucl. Instr. and Methods 113, 349 (1973); plus NASA reports.

d) J. J. Lord, et al., 6th. Int. Conf. on Corpuscular Photography, p. 387 (1966).

Appendix III (Continued)

4. Flash Tube Chambers

a) E. Conversi, Ann. Rev. Nucl. Science, 1973; various internal CERN reports, 1976.

b) F. Taylor, Fermilab Neutrino Workshop, April 21, 1977.

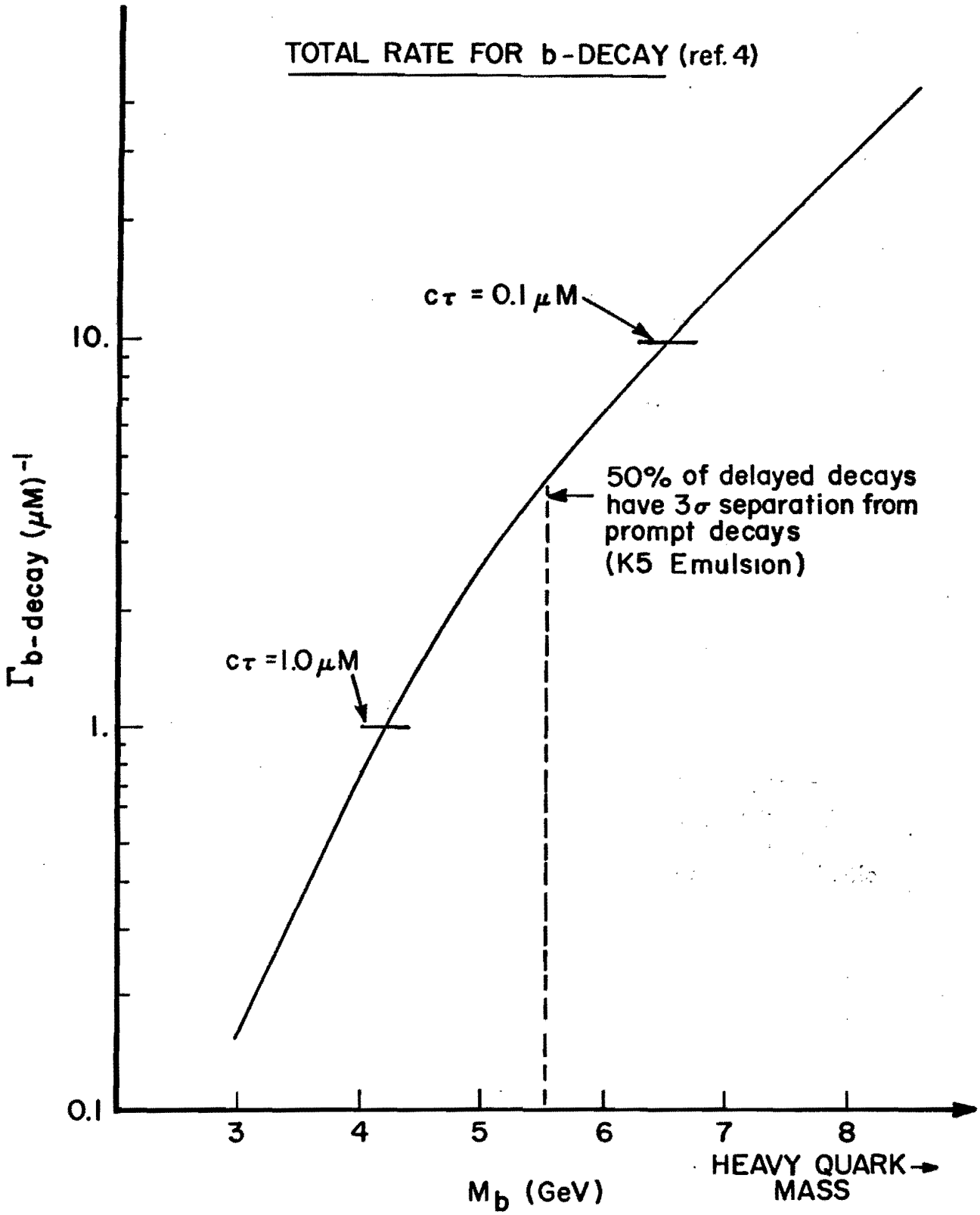
TOTAL RATE FOR b-DECAY (ref. 4)
cτ = 0.1 μM
cτ = 1.0 μM
50% of delayed decays have 3σ separation from prompt decays (K5 Emulsion)
10.
1.
0.1
3
4
5
6
7
8
Γb-decay (μM)⁻¹
Mb (GeV)
HEAVY QUARK MASS

Fig. 1

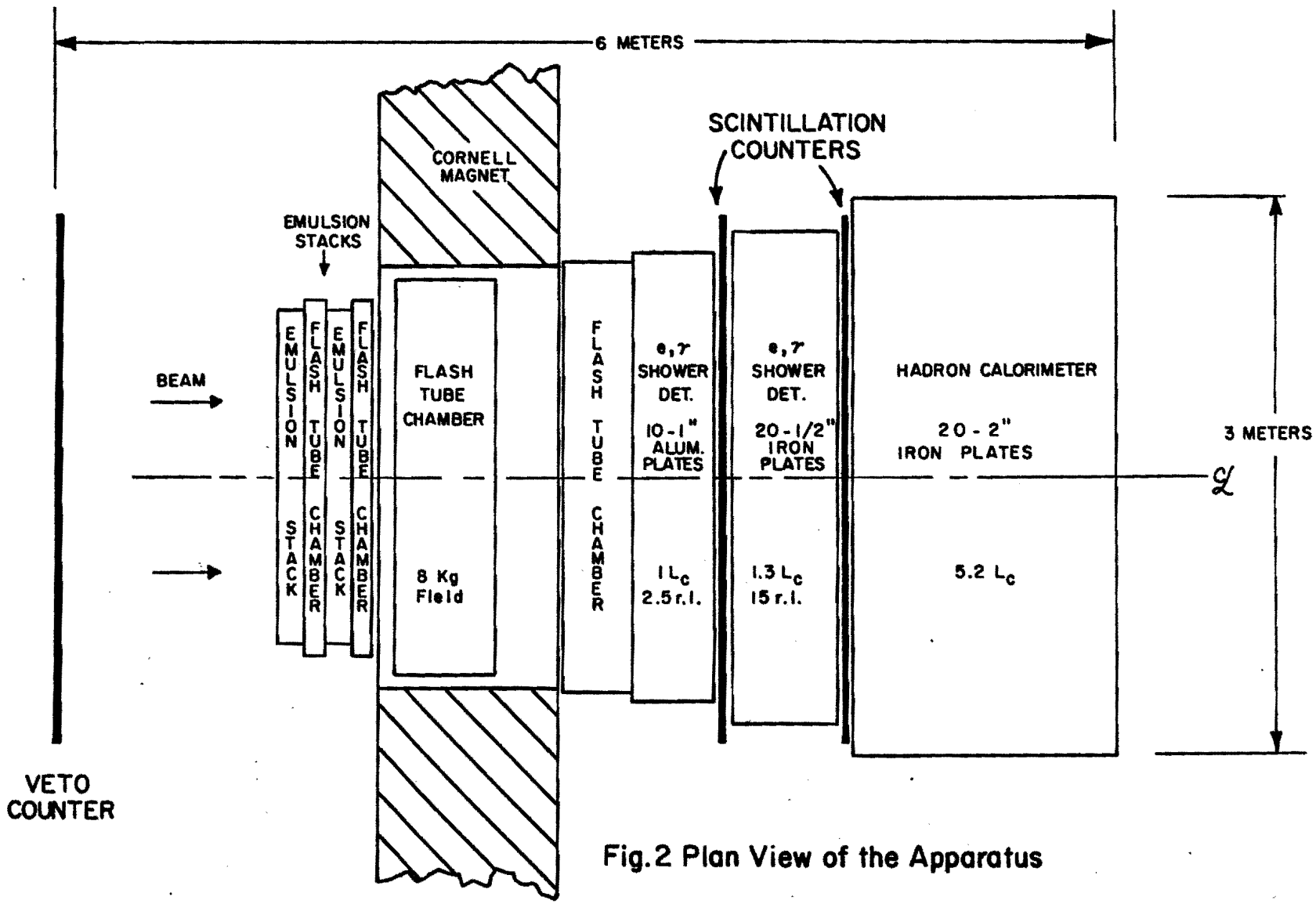

Fig. 2 Plan View of the Apparatus

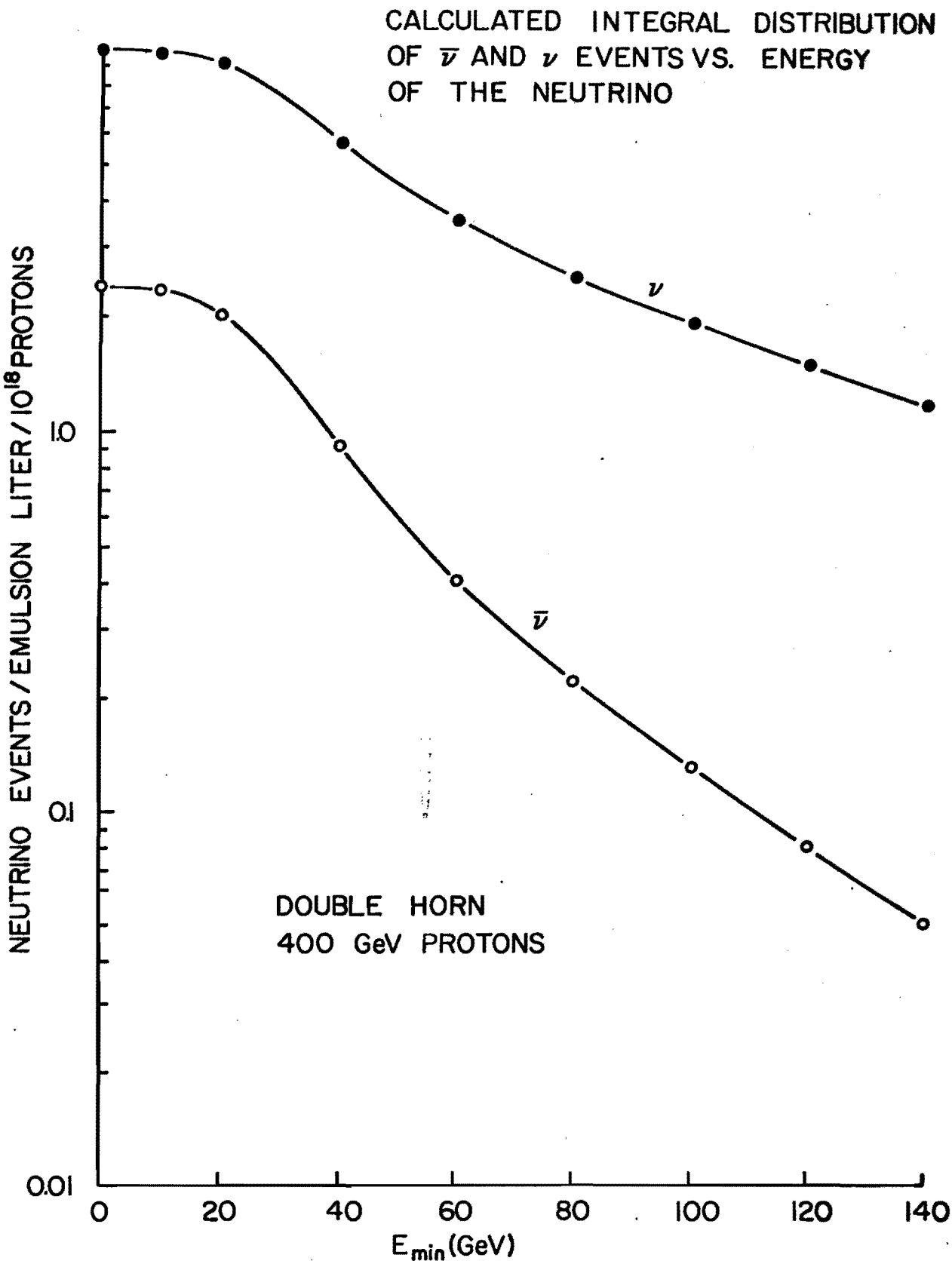

Fig. 3

0290577

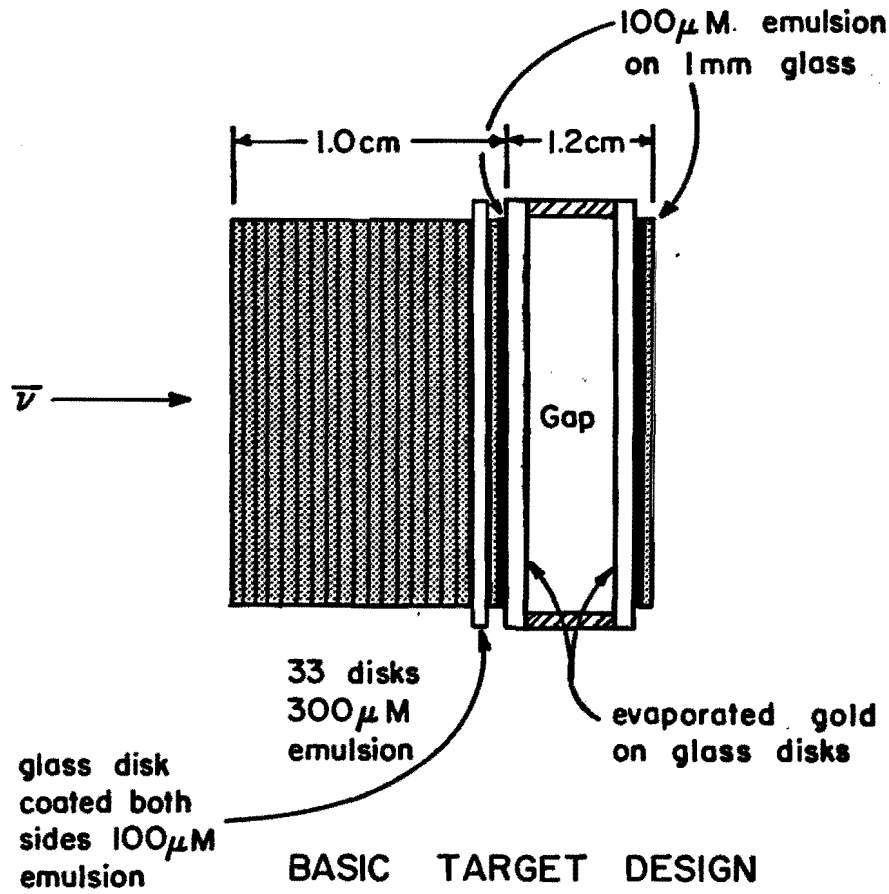
100μ M. emulsion
on 1mm glass
1.0cm
1.2cm
$\bar{\nu}$
Gap
33 disks
300μ M
emulsion
evaporated gold
on glass disks
glass disk
coated both
sides 100μM
emulsion
BASIC TARGET DESIGN

Fig. 4

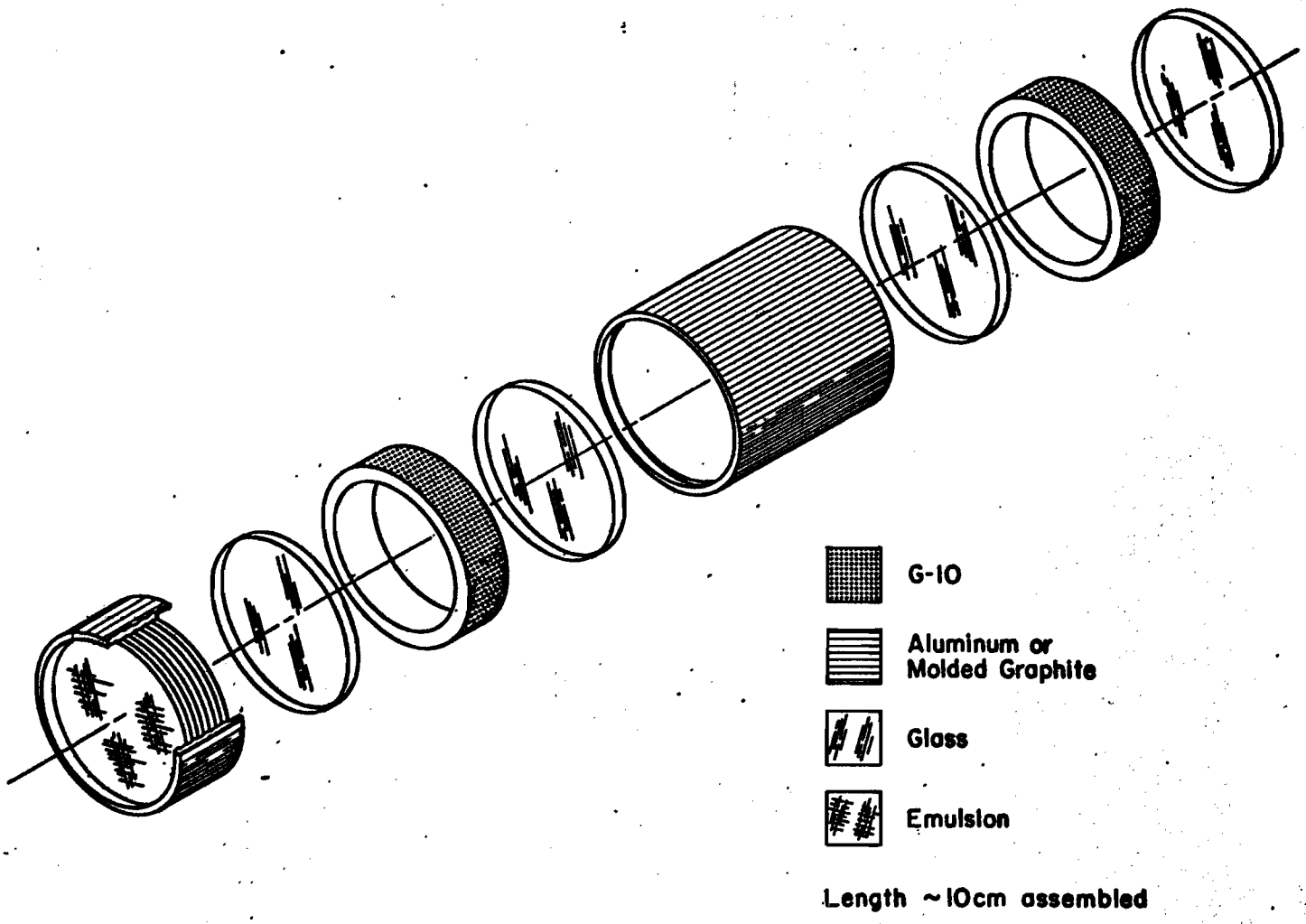

POSSIBLE TARGET MODULE DESIGN

Fig. 5

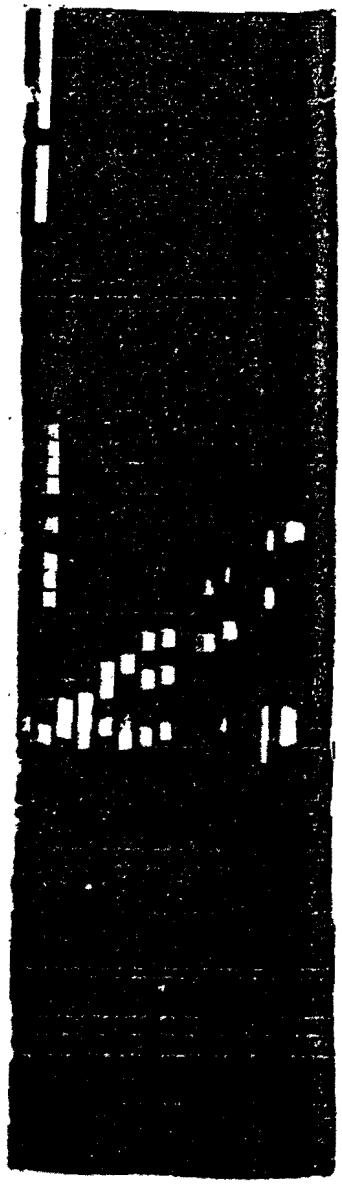

EARLY RESULTS FROM FLASH TUBE CHAMBER IN M5 BEAM

Fig. 6

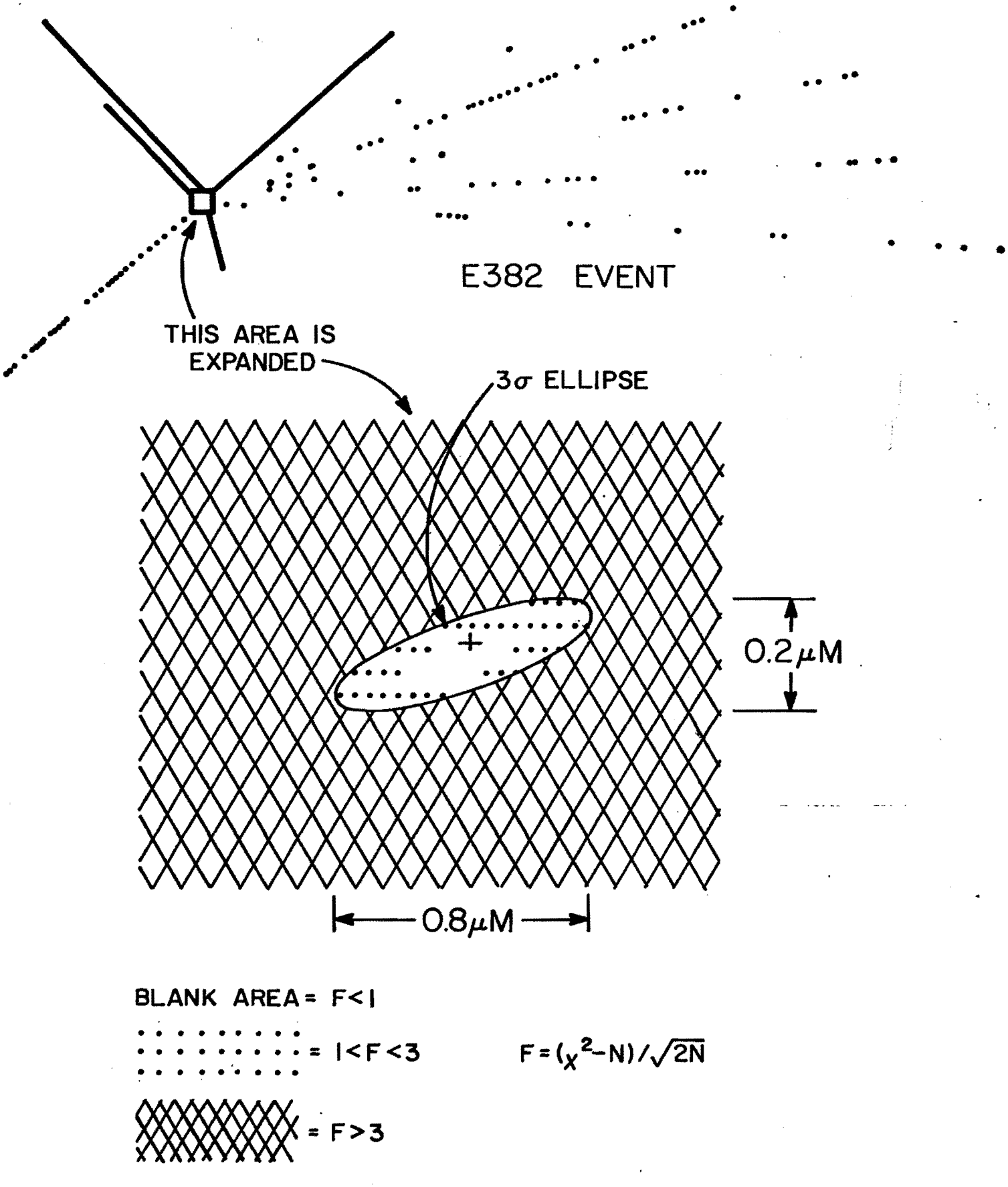

SEARCH FOR DELAYED DECAYS AT STAR VERTEX IN E382

Fig. 7

0290577

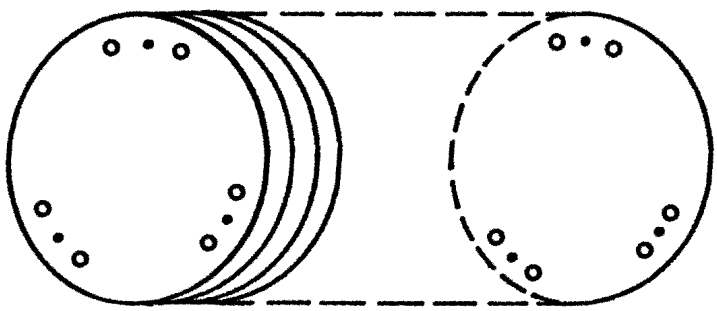

FIG. 8 X-ray marking

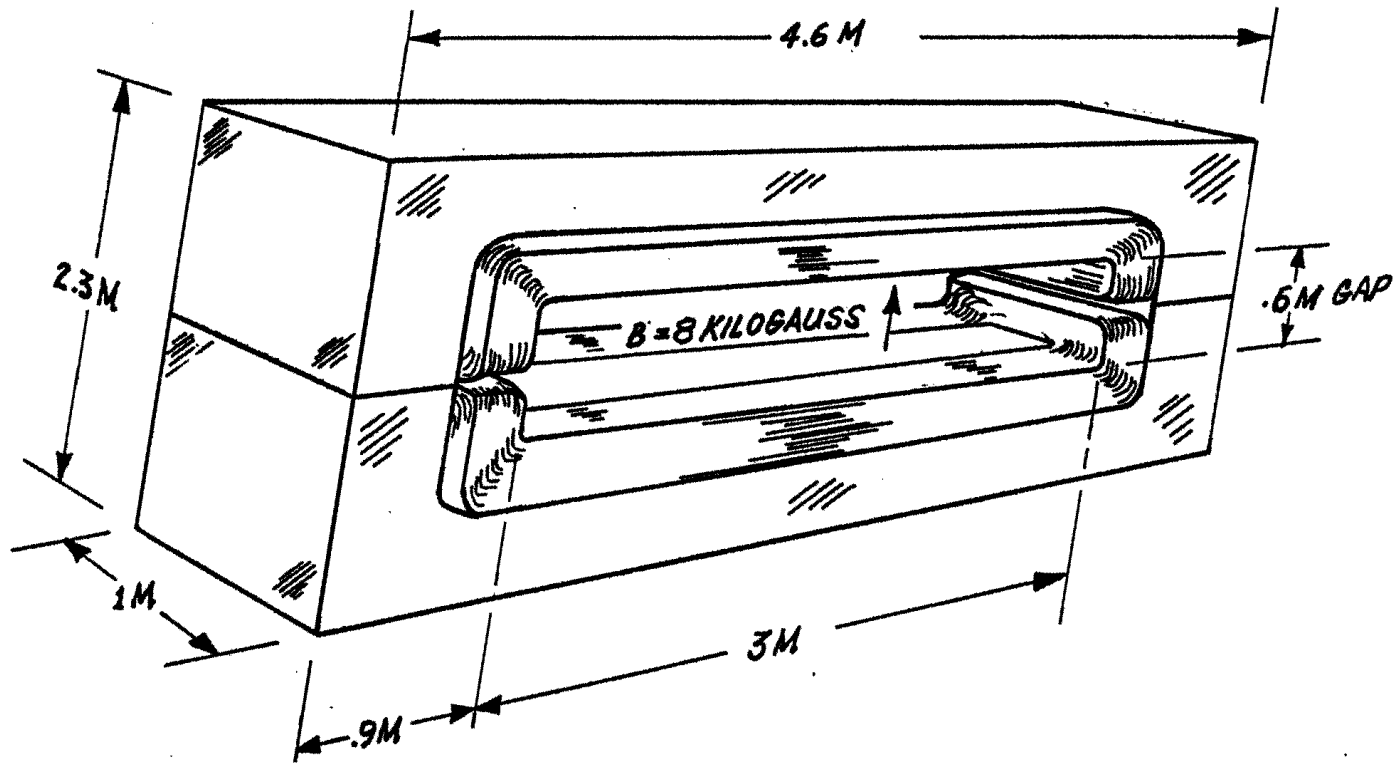

POWER REQ'D. - 450 KW
VOLTAGE - 150
AMP. - 3000

CORNELL MAGNET
Fig. 9

SUBJECT
Fig. 10

PROPOSED EMULSION SPECTROMETER
L. Hand et al.
Site Location and Sections

NAME: Wayne W. Nestander
DATE: 3 May 77
REVISION DATE:

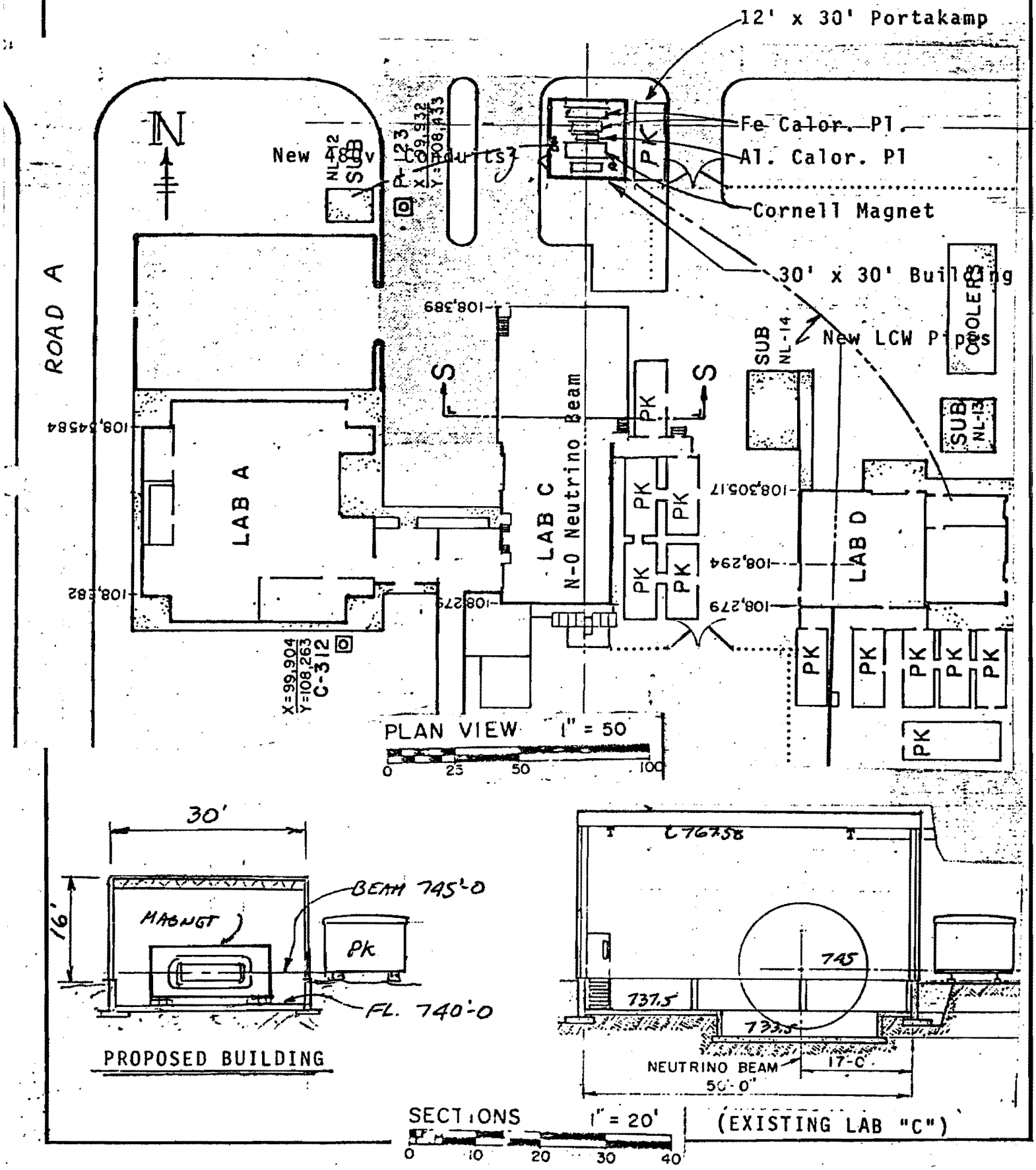

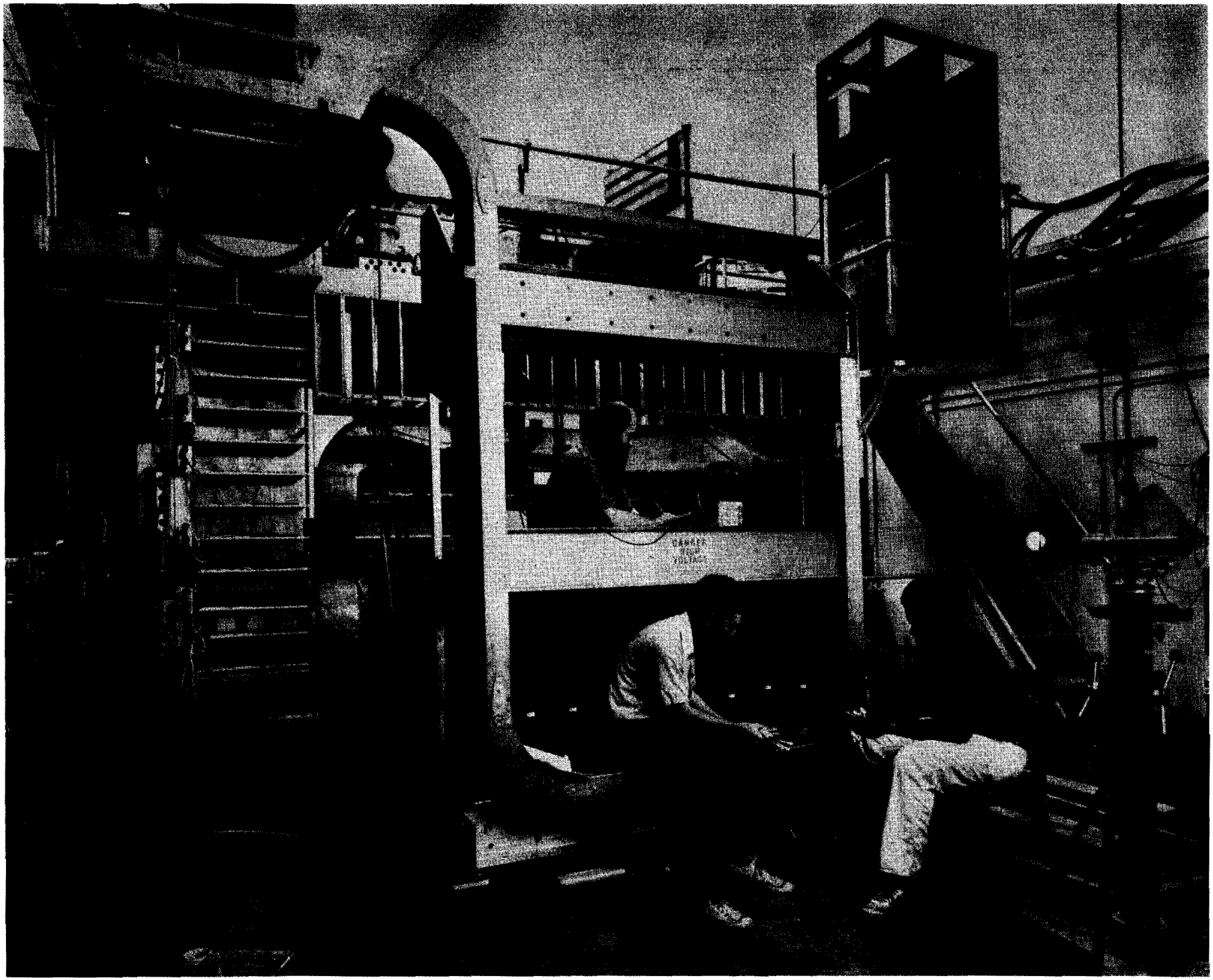

Fig. 11

References to Footnotes in the Text

1. E. H. S. Burhop, et al., Nuovo Cim. 39 (1965), 1037

2. E. H. S. Burhop, et al., Physics Letters 65B, 299 (1976)

3. J. L. Rosner, Report COO-2220-102, January 1977, Institute for Advanced Study

4. M. Peskin, internal Cornell memorandum. We would like to express our appreciation to Mr. Peskin for his invaluable help.

5. R. Schrock, C. Albright, Fermilab Theory Preprint, Feb. 1977. We would also like to acknowledge valuable discussions with Ben Lee of Fermilab.

6. See references in Appendix III to Conversi and others.

7. See Appendix III

8. See Appendix III

9. This turns out to be an old idea. We are indebted to L. Voyvodic for pointing this fact out to us.

10. B. C. Barish, CALT 68-581, December 1976 and published work.

11. Ref. 10, Lecture 8, page 677 and published work by the Harvard-Penn-Wisconsin-Fermilab Group.

11a. E. H. S. Burhop, private communication.

12. One of us (E. M. Friedlander) has several publications in Romanian Journals.
    E. Friedlander, A. Marin, Inst. of Atomic Physics-HE-35/70, Bucharest 1970.
    J. Friedlander, E. Friedlander, Revise Roumaine de Physique, v. 13 pg. 597 (1968).
    J. Cohen, E. Friedlander, H. Totia, T. Visky, RRP v. 11, p. 449 (1966).

13. R. Holynski and S. Krzywdzinski, private communication.