PROPOSAL TO STUDY CHARM PARTICLES PRODUCED IN HADRONIC INTERACTIONS

D.BUCHHOLZ, B.GOBBI, J.KEREN, R.LIPTON, R.LORD, J.ROSEN, R.RUCHTI,
R.SCHLUTER, AND D.SPELBRING

Northwestern University
Evanston, Illinois 60201

and

E.BLESER AND D.JOHNSON

Fermi National Accelerator Laboratory
Batavia, Illinois 60510

October 1, 1976

Correspondent: J.Rosen
Department of Physics
Northwestern University
Evanston, Illinois 60201

312-492-5463,5457

PROPOSAL TO STUDY CHARM PARTICLES PRODUCED IN HADRONIC INTERACTIONS

SUMMARY

We propose to intensify our study of charmed particles produced in hadron-nucleon interactions by exploiting the technique of triggering on prompt muons. This method capitalizes on the associated production of charmed particles and uses the semi-muonic decay of one member of the pair to trigger the detector. We are therefore able to combine the requirements of large acceptance and good mass resolution for high mass states with effective background suppression.

A preliminary analysis of our recently completed experiment, E397, suggests that this search was sensitive to charm production at the 10 microbarn level. With the new spectrometer we anticipate at least a fifty-fold increase in sensitivity over E397 - i.e. sensitivity to charm production at the 0.1 microbarn level. If our preliminary findings hold true, and charm production in fact does occur at the 5-10 microbarn level as the E397 results suggest, then the experiment here proposed will be sufficient to not only identify particular states, but will provide detailed measurements of production and decay distributions of these particles.

The detector is an innovative extension of our previous charm particle searches. It will employ a muon trigger arm consisting of heavimet, steel, and magnetized iron which will be instrumented with scintillation counter hodoscopes and proportional chambers to identify the muon and measure its momentum. It will also include a large-acceptance, high resolution forward arm containing a trigger hodoscope and proportional chambers, now complemented with a Cerenkov system capable of separating π,K,p in the range $10 \leq p \lesssim 50$ GeV/c, and a liquid argon shower detector for comprehensive electron and neutral particle detection. Final state K^o and Λ^o will also be reconstructed. The spectrometer will require two magnets: a BM109 (already assigned to E397), and an SCM105 (or equivalent), one of which is currently available at Argonne National Laboratory. We request that the detector be placed in a charged-particle beam capable of delivering 10^7 particles per pulse of momentum 200 GeV/c or greater.

We have long-standing experience with large-acceptance, forward spectrometers (E27,E305,E397) and with prompt muon triggers (E397), and believe that this proposal will provide a definitive probe into the production and dynamics of charm particles in hadron-hadron collisions. We request a total of 1000 hours of beam for these studies.

Proposal to Study Charm Particles Produced in Hadronic Interactions

I. Introduction

A. Physics Motivation

At the time of preparation of this proposal (September 1976) it appears that the existence of charm particles has been established by the observation of hadronic decay modes of narrow high mass states. These states have been produced electromagnetically at S.L.A.C. and Fermilab. Earlier neutrino work had provided good circumstantial evidence for charm particle production principally in the form of dilepton events (μ-e and μ-μ). The existence or extent of hadronic charm particle production has not been decisively established.

An experimental resolution of this situation should be a Fermilab goal of the highest priority. There are two levels of success to be considered:

1. The level of charm production in hadronic collisions must be established. Searches to date have reported $\sigma B(D^0 \rightarrow K^{\mp} \pi^{\pm}) \leq 1\ \mu b$ in nucleon-nucleon collisions. The proposed experiment is designed to provide a sensitivity of $\sigma B \sim$ few nb. We will also be prepared to initiate the search with incident pions. Pion production of ψ's exceeds that of nucleons and the advantages of pions may be even more decisive given that the charm threshold is higher. If nature is unkind and hadronic charm production is cruelly suppressed, this vital piece of dynamical information must be established. The repercussions would be very significant. Our posture vis-a-vis the relative merits of p-p, p-$\bar{p}$, e-p and e^- - e^+ storage rings could be strongly influenced.

2. It is premature to say the least, to concede all charm particle spectroscopy to weak and electromagnetic production channels. If hadronic charm production were to materialize in the $\sigma \sim (0.1 - 1.0)\mu b$ range we will observe it but the signal to background will preclude extended studies of charm decay physics. If on the other hand, σ is 1-10 μb, a rich competitive spectroscopy

will ensue. The event rates should then be about an order of magnitude greater than those presently achieved at SPEAR. Of course, the experiment here proposed will have to compete in time with the Mark II SPEAR spectrometer. The cost and labor of the latter far exceeds that outlined in this proposal. The spectrometer we describe will tax our resources to the fullest. With less than grandiose Fermilab and ERDA support we believe we can be quite competitive.

There are some indicators from present experimentation which support some optimism concerning the future of hadronically produced charm studies. Incomplete analysis of our recently completed Experiment-397 provides evidence for charm production at the $\sigma \sim 10\mu b$ level. We shall present and discuss this work as it becomes available.

B. Experimental Strategy

The new proposed experiment is a refined and embellished version of the recently completed E-397. Figures 1 and 2 illustrate the final configuration of E-397. A forward aperture spectrometer system was used to search for (1) 2 and 3 body charm particle hadronic decays, (2) electronic decays and (3) muonic decays. The key idea was (and is) to trigger on associated charm particle production by requiring a prompt muon trigger ((8-30)GeV, $p_\perp \sim$ (0.5-1.5)GeV/c) (Fig. 3). This trigger muon was detected and measured in a separate spectrometer arm which was constructed in such a manner as to provide muon momentum (and charge) analysis by using the polarized iron of the BM-109 upper return yoke.

When properly executed this scheme provides an enormous suppression of non-charm background. We estimate that our acceptance for the muon resulting from a semi-muonic charm decay is about 5%. If the semi-muonic branching ratio is 20% (10%) the efficiency of charm detection is 1%(0.5%). Of course either charm particle can decay semileptoncially so that one can multiply by two. What is the probability that a non-charm even can provide a prompt muon signal by the mechanism of pion production followed by rapid decay before absorption in the muon arm Tungsten

and iron filter? On the basis of 100-400 GeV p-p bubble chamber data we predict 1.3 mb of pion production with $p \geq 12$ GeV/c and directed toward the muon arm. Hence, about 4% of the interactions provide pions with the relevant angles and momenta. The probability that such pions (mfp for decay $\sim$ 800 m) decay in the available space ($\sim$ 20 cm) is $\sim 3 \times 10^{-4}$.

Our trigger rate of 2×10^{-5} μ triggers/interaction was better than we hoped for in the E-397 proposal. Of these triggers, off-line analysis provided fitted μ tracks 50% of the time. On the basis of absorber studies we estimate that (50 ± 25)% of the muons are prompt. (See figure 3 and extrapolate to - 8 inches). The off-line analysis that will provide more accurate information on our prompt muon yield is incomplete. It should be appreciated that the analysis of such low energy prompt μ production is difficult. All previous Fermilab studies of prompt lepton production have considered appreciably higher lepton energies. Our preliminary indication is that $\mu/\pi \sim 3 \times 10^{-4}$ for our range of sensitivity. This is compatible with the e/π data reported by the I.S.R. experiment of L. Baum, et.al. Physics Letters 60B, 485 (1976). This is the only work of which we are aware, that has measured prompt lepton production in a similar dynamical range.

Most prompt lepton studies have found $\ell/\pi \sim (0.5\text{-}1.0) \times 10^{-4}$ at much larger values of $p_\perp$ and/or C.M. momentum. It is important to emphasize a point that is not always appreciated. The dynamics (and kinematics) of electromagnetic lepton production are considerably different from that of semileptonic hadron decay. It is undoubtedly true that the bulk of lepton production at large p and $p_\perp$ is electromagnetic in origin. Charm decay can contribute materially only to the low p and moderate $p_\perp$ range. Our preliminary indication of prompt μ production interpreted as primarily produced by charm particles suggests charm production at $\sim 10\mu b$ level.

II. Description of Spectrometer

We believe that we can improve upon E-397 by almost three orders of magnitude in rate and add neutral particle detection and charged particle identification features. Let us list the major elements of the new system and indicate where the various constituent improvements accrue. Figures 4 and 5 sketch the basic geometry of the new scheme.

1. We propose to use a beam of $\sim 2 \times 10^7$ π^-/pulse, of $\sim$ 200 GeV/c momentum with a vertical spot size at the target $\leqslant$ 1 mm. E-397 employed a (mean) 300 GeV neutron beam with a vertical spot size of 3 mm.

It is reasonable to speculate that pions will be superior to nucleons for charm production. Pions seem to produce ψ's somewhat better than nucleons. The charm threshold is higher so that the pion advantage may be even more pronounced. The indicated pion flux is an order of magnitude higher than that of the neutron beam. This will preclude spark chamber usage.

An all P.W.C. charged particle spectrometer system is envisioned ($\sim$ 12 k wires). P.W.C. systems have an order of magnitude better resolving time than spark chambers. Although spark chambers and drift chambers have better spatial resolution, we think that resolving time is the more decisive consideration.

The sharper vertical spot size achievable in a charge beam minimizes the path for secondary meson decay into muons.

2. Because the μ filter extends up close to the target and because reaction charge multiplicity is inherently high, we have not deployed chambers in front of the E-397 analyzing magnet. We regard the pattern recognition problems associated with such close up chambers to be prohibitive. The E-397 analysis tracks line segments emerging from the magnet and uses the target interaction point for momentum reconstruction analysis. Thus the E-397 system does not permit good reconstruction of V particles produced in flight (K^o_S and Λ^o).

The new system calls for a large aperture second magnet (SCM105) downstream of the first (BM109), with chambers fore and aft. A momentum analysis independent of the target vertex is then possible. Tracks which do not trace back through to the target can then be fitted to a K^o_S or Λ^o hypothesis. Hence K^o_S and Λ^o decays can be recovered. For tracks which are consistent with the hypothesis of target vertex production, a second analysis can constrain the trajectory to the target vertex and the 1.02 GeV/c transverse kick of the BM109 will then strengthen the particle momentum determination.

The entry position of the pion at the target will be tagged upstream of the target. Although this beam hodoscope arrangement is by no means trivial in view of the high beam rate, the advantages in position resolution vis-a-vis the neutron beam should be obvious.

3. The double magnet configuration and tighter definition of target interaction point will permit the target to be close to the limiting aperture of the BM109. The limiting aperture of the magnet will subtend ± 33 mr V, ± 100 mr H in contrast to the ± 20mr V, ± 60 mr H aperture of E-397. Thus the acceptance/particle will be 2.5 times larger.

4. Two sectorized threshold Cerenkov counters will provide charged particle mass separation (π-K separation - (6-25) GeV/c, p-K separation - (14-50) GeV/c). Direct particle identification was not available for E-397.

5. A sectorized liquid Argon-Pb plate shower detector 1.25m V x 2.5m H will shadow 2/3 of the limiting aperture. Hadron-electron separation will be an order magnitude improved. Charm physics involing π^o, η^o and γ in the final state will be accessible.

Obviously, the dollar and manpower resources required to develop and construct this new spectrometer are very great. How much we can muster depends a great deal on ERDA and Fermilab. We are beginning to solicit potential collaborators. The prospect of attracting either collaborators with unsophisticated

instrumentation resources or quality collaborators with lingering or overlapping commitments is distasteful. On our own, given a 1.5 year schedule, we estimate that we can cover something like 50% of the overall work load. Perhaps we may be forced to make some priority compromises or stretch out the schedule a year or two. This would be unfortunate. We sincerely believe that our program could be a vital component in maintaining Fermilab leadership in new particle physics.

III. Trigger Rates and Yields

The basic trigger involves a prompt $\mu^{\pm}$ signal and at least one detected charged particle in the forward arm. Trigger rates obtained in E-397 are shown in Figure 3 and are tabulated in Table 1. We expect to have similar rates in the proposed configuration, $\sim$ 2 triggers per 10^5 interactions. With a beam of 2×10^7 particles/pulse and a 10% interaction length target, this translates into 40 triggers/spill, well within the capabilities of the MWPC system. Table 1 provides a comparison of the present proposal with measured yields from E-397.

We envision a run consisting of 5×10^6 triggers. The Cerenkov information will be imposed in the off-line analysis and will reduce the background by a factor 6-10. Hence we expect our sensitivity to increase by a factor of $\sim$ 50 over our previous work - and hence to the $\sim$ 0.1 microbarn level for charm production.

We require approximately 1000 hours of beam time.

Operating Conditions and Projected Rates for the Proposed Charm Spectrometer

Beam	200 GeV π^- 2×10^7/pulse beam spot at target (1-2)cm horiz. $\lesssim$ 1 mm vert.	<E> = 300 GeV neutrons 2×10^6/pulse 1 cm horiz. 3 mm vert.
Interaction rate	1.5×10^6/pulse(corresponding to 20mb)	1.5×10^5/pulse (corresponding to 30mb)
μ trigger rate	20/pulse (corresponds to projected vertical angle of $\mu \geq 0.045$)	3/pulse
Total number of interactions	4×10^{11}(50 days of 5k pulses/day = 2.5×10^5 pulses)	1.3×10^{10} for prime data sample
Total number of μ triggers	5×10^6	2.6×10^5
μ acceptance assumed semileptonic branching ratio	$\sim$ 0.04 $\sim$ 0.2	.05
No. of interactions/μb of charm production	2×10^7	4×10^5
No. of interactions producing prompt $\mu^\pm$ trigger/μb of charm	1.5×10^5	4×10^3
Spectrometer Aperature	±33mr vert. ± 100mr horiz.	± 20mr ± 60mr
No. of D(1.87) $\rightarrow K^\pm \pi^\mp$ events/μb of charm	500 (using Acceptance $\sim$30% branching ratio 10^{-2})	4 (certain data cuts not envisioned for new experiment reduced this by another factor of 3)

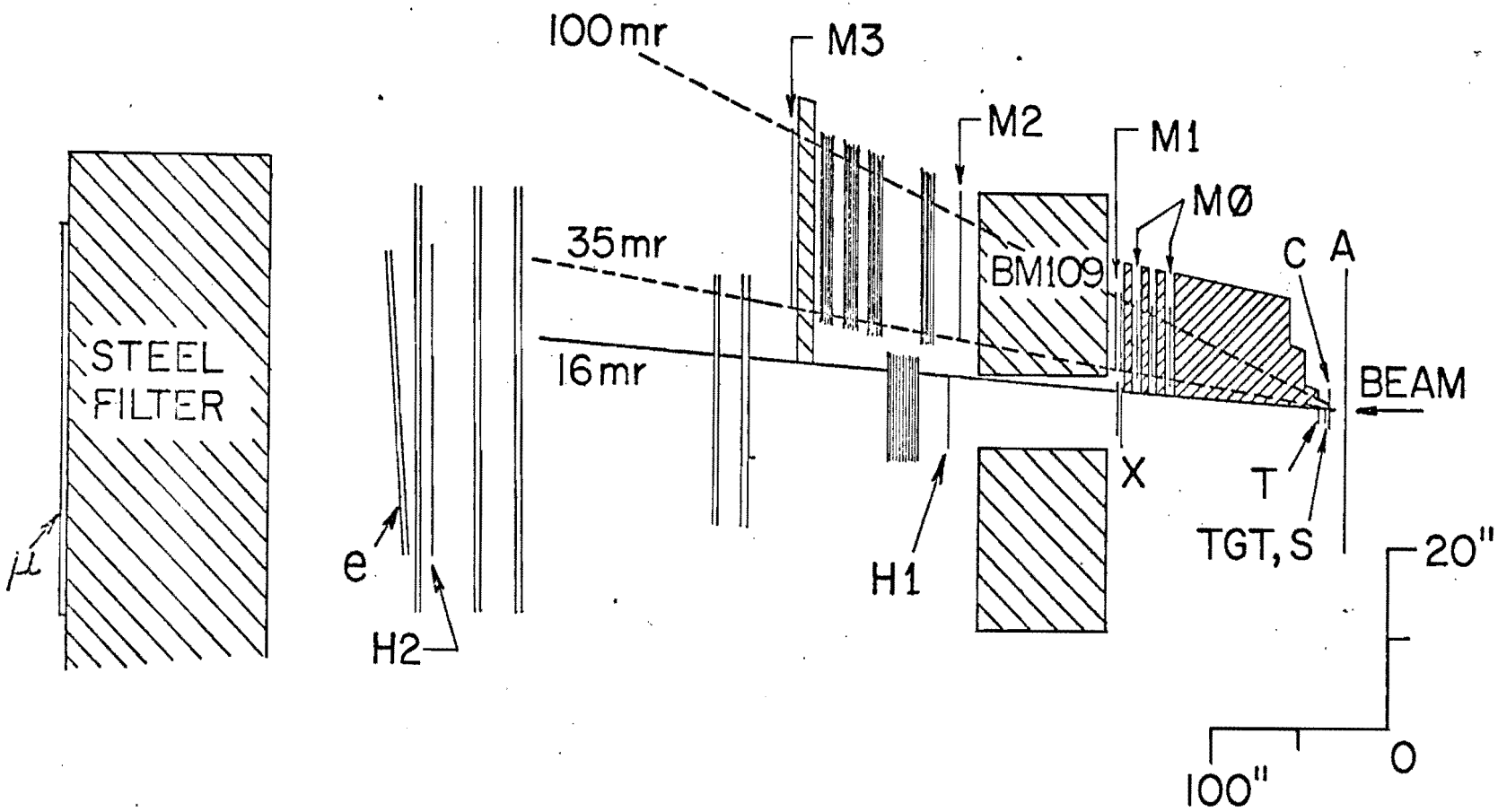

Figure 1. Elevation view of E397 apparatus.

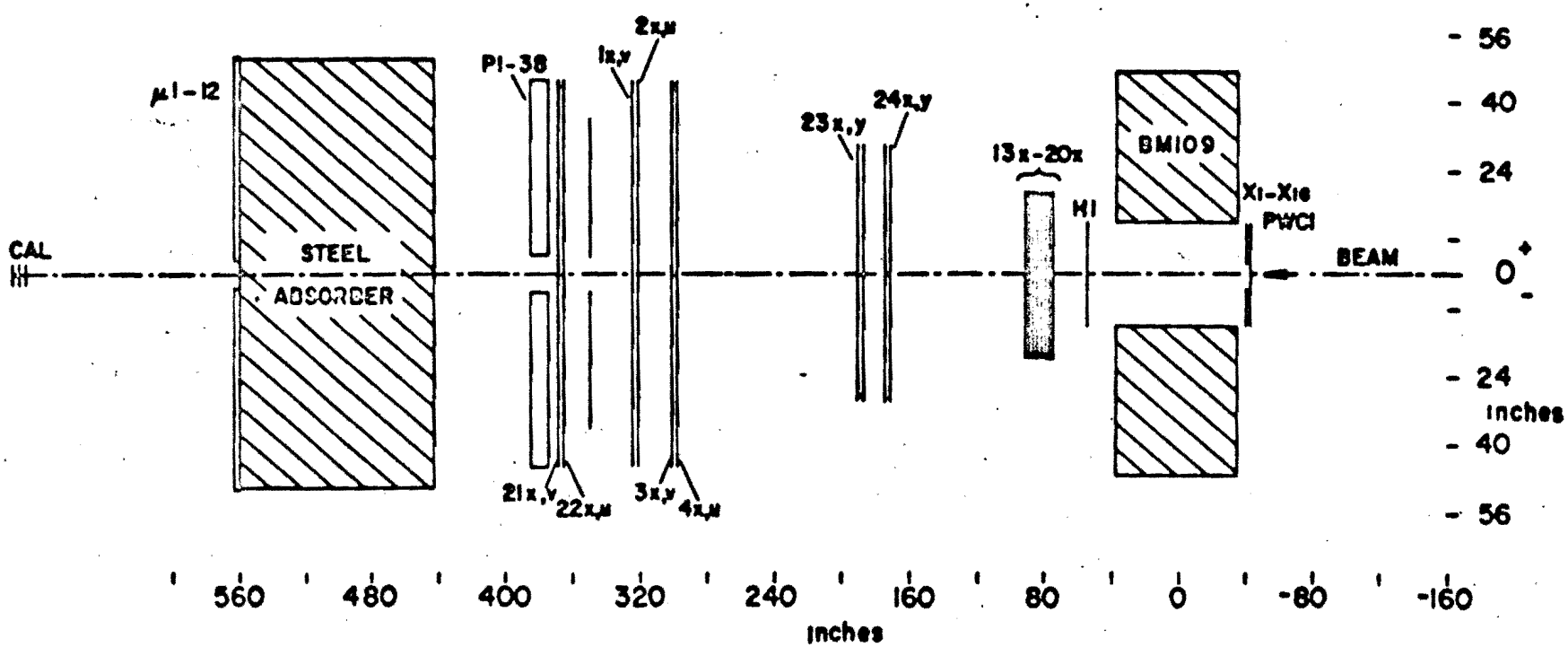

Figure 2. Plan view of the E397 apparatus.

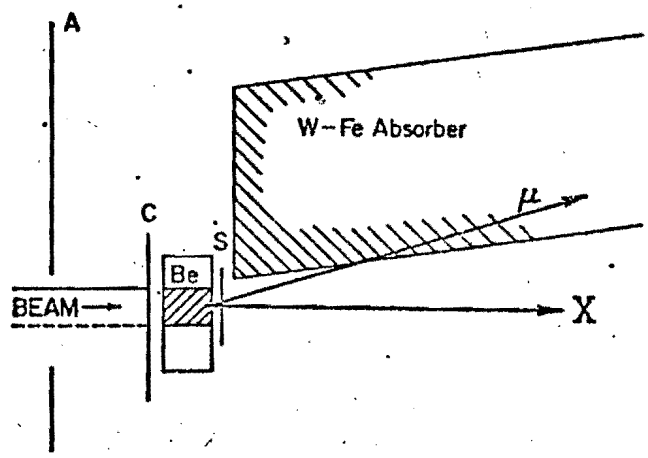

The target region. The upper edge of the beam (solid line) is fixed. The lower edge (dashed line) is adjustable.

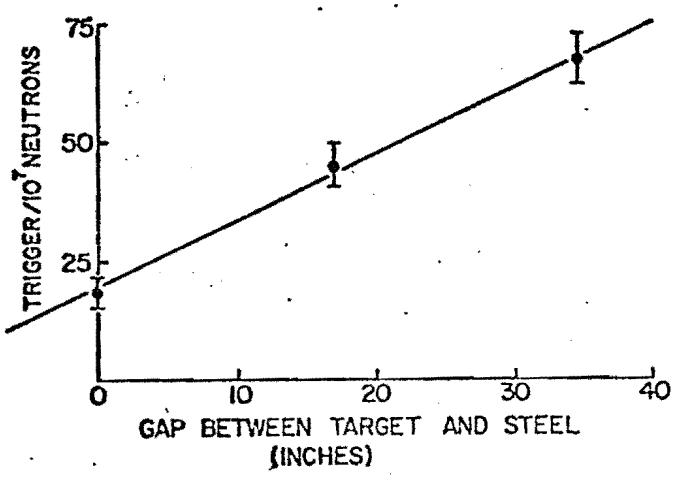

Trigger rate as a function of gap size between the target and the absorber.

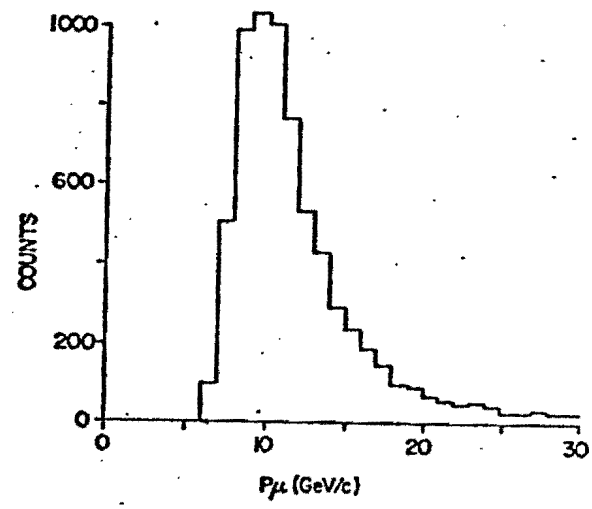

Muon momentum distribution, uncorrected for acceptance.

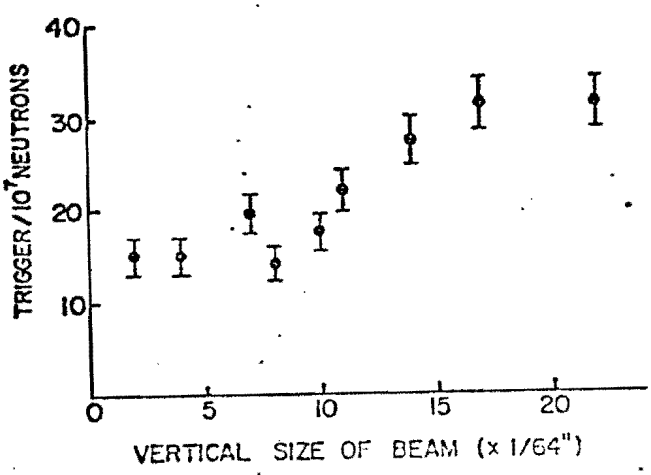

Trigger rate as a function of beam spot size.

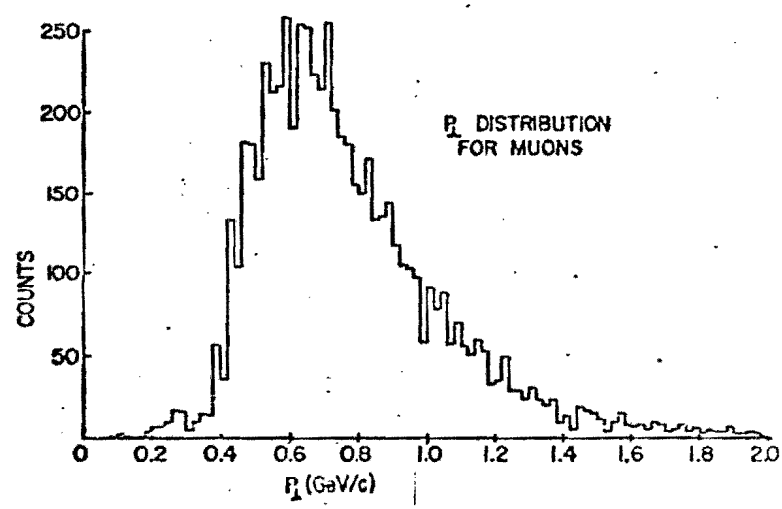

Muon transverse momentum distribution, uncorrected for acceptance.

Figure 3

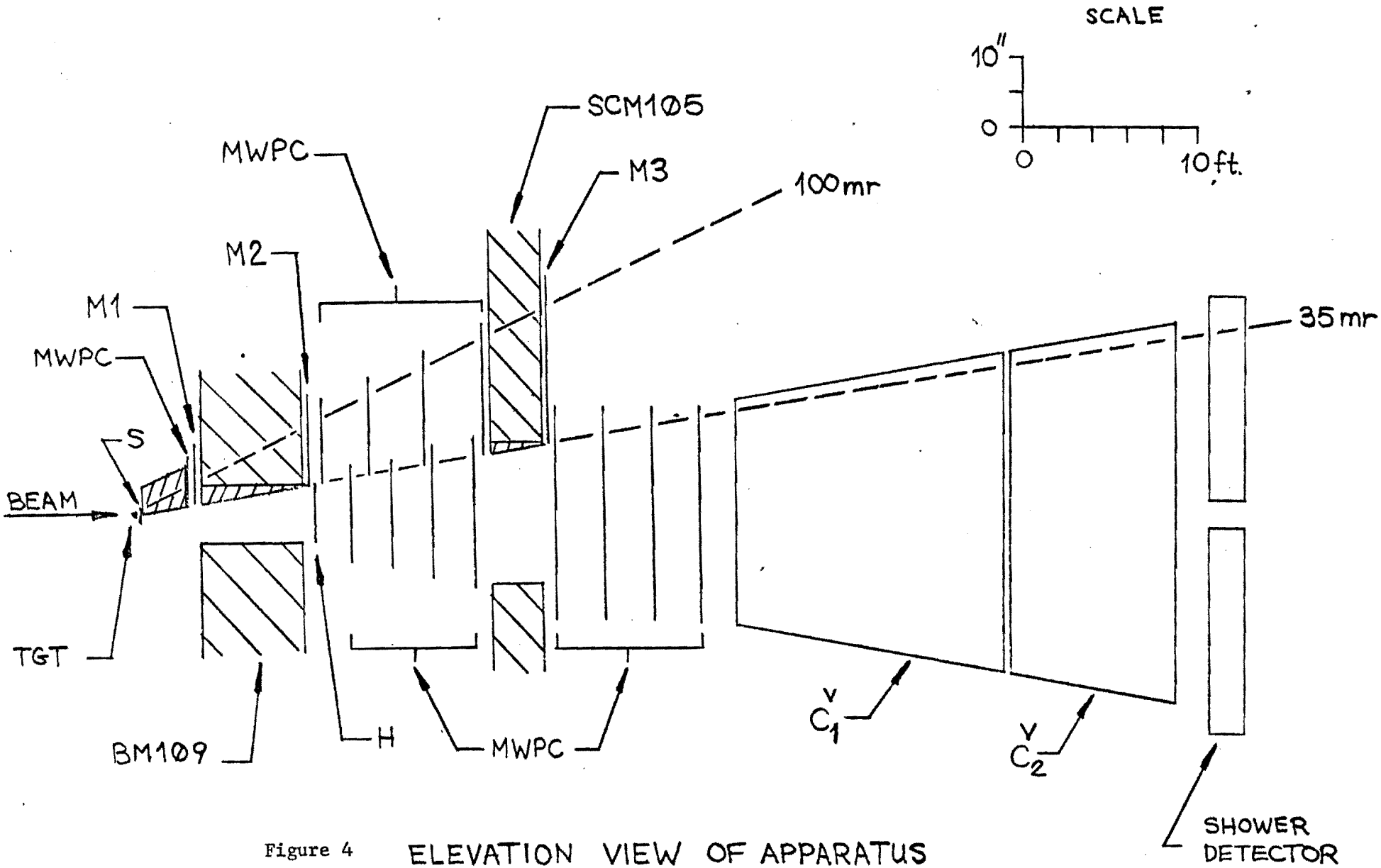

Figure 4 ELEVATION VIEW OF APPARATUS

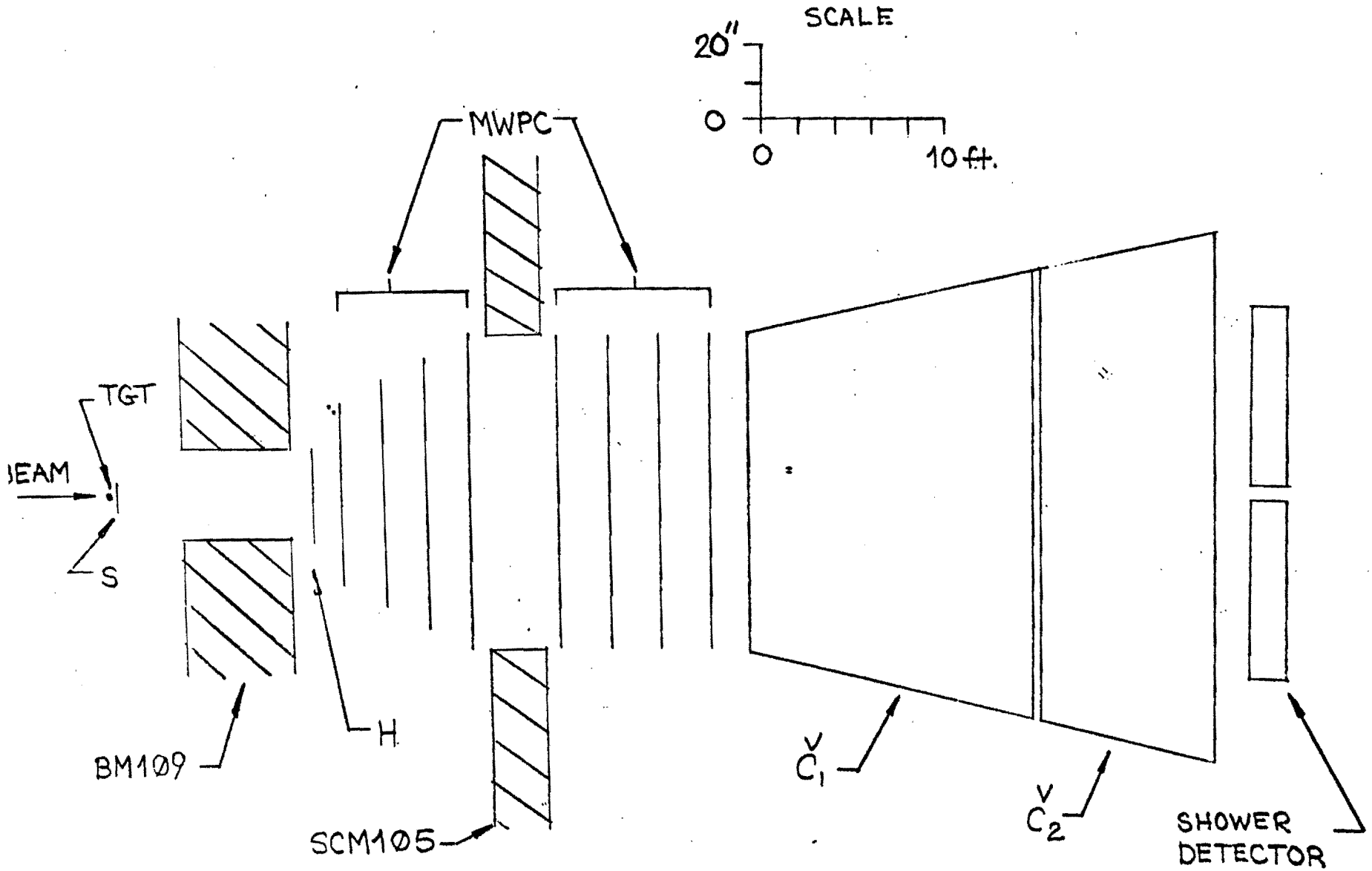

Figure 5 PLAN VIEW OF APPARATUS