483

FNAL Proposal
April 26, 1976
Spokesman: Michael J. Longo
Phone (313)-764-4443

Proton-Proton Elastic Scattering at $|t| = 374\ (\mathrm{GeV}/c)^2$

Michael J. Longo (Spokesman), Cyril A. Ayre
H. Richard Gustafson, Lawrence W. Jones, and Thomas J. Roberts

University of Michigan, Ann Arbor, MI 48109

Proposal Summary:

We propose to measure (or put a stringent upper limit on) the differential cross section for p-p elastic scattering at 90° in the CMS with incident protons of 400 GeV. This would push the frontier of high-energy physics out to $t = -374\ (\mathrm{GeV}/c)^2$, more than an order-of-magnitude increase over the range of previous experiments. This corresponds to a distance scale $\ell \equiv \hbar/p_T$ which is ~ 0.015 fm.

The experiment is straightforward and modest in scale. The apparatus consists of a liquid hydrogen target and two well-shielded spectrometers placed symmetrically about the incident proton beam. Each spectrometer contains two 20 ft. main ring magnets, proportional chambers (or counter hodoscopes), and a total absorption calorimeter.

We anticipate a sensitivity $(d\sigma/dt)_{min} \sim 10^{-41}\ \mathrm{cm}^2/(\mathrm{GeV}/c)^2$. This estimate is based on a running time of 600 hrs at 60% overall efficiency with 3×10^{12} protons/pulse.

Physics Justification

In the authorizing legislation for the Fermilab accelerator[1] it is stated that the fundamental reason for building higher energy accelerators is to probe matter at increasingly smaller distances. In the context of present knowledge, probing smaller distances means studying larger transverse momenta.

Ironically, the present record holders for studying hadron-hadron interactions at the largest transverse momenta are experiments done over a decade ago at the CERN PS[2] and the Brookhaven AGS.[3] The latter reached a $|t|$ of 24.4 $(\mathrm{GeV}/c)^2$ or a p_T of approx. 3.6 GeV/c, while the largest $|t|$ studied so far at Fermilab is $t \leq 20 (\mathrm{GeV}/c)^2$ in E-177.

We propose to begin to rectify this rather scandalous state of affairs and push the large $|t|$ frontier back over an order-of-magnitude by studying p-p elastic scattering at a $|t| = 374$ $(\mathrm{GeV}/c)^2$ or a p_T of 13.7 GeV/c.

It is difficult to guess what to expect at this new frontier. It is almost certainly a mistake to use currently popular theories to extrapolate such a long way. Table 1 and Fig. 1 briefly summarize what various theories[4-7] would predict if we extrapolate the CERN data at $\theta^* \approx 90°$ to a lab energy of 400 GeV (s=750 GeV^2). The predictions are generally discouraging. It is worth noting however that even as little as a 0.1% "point-like" component in p-p elastic scattering would be detectable (i.e., a 0.1% component with an s^{-2} dependence).

Perhaps the best way to emphasize the risk in taking the theoretical predictions seriously is to cite a historical example. Around 1909 Geiger and Marsden studied the scattering of α particles off gold foils. If one calculates the fraction of α particles which scatter at angles > 90° using the Thomson ("plum pudding") model of the atom which was then in vogue, the result for their

Table 1

Predictions of Models for Fixed-Angle p-p Elastic Scattering

Model	Reference	Cross Section Behavior at Fixed Angle	Comments
Statistical Bootstrap	Hagedorn[4] Frautschi[5]	$e^{-\sqrt{s}/m_\pi}$	Inconsistent with data for $s<45$ GeV^2
Quark Interchange	Brodsky and Farrar[6a] Blankenbecler, Brodsky, + Gunion[6b]	s^{-10} s^{-12}	In good agreement with data for $s<45$ GeV
Pointlike hadrons with scale invariant force ("QED")	Berman, Bjorken, and Kogut[7]	s^{-2}	Inconsistent with data for $s<45$ GeV^2

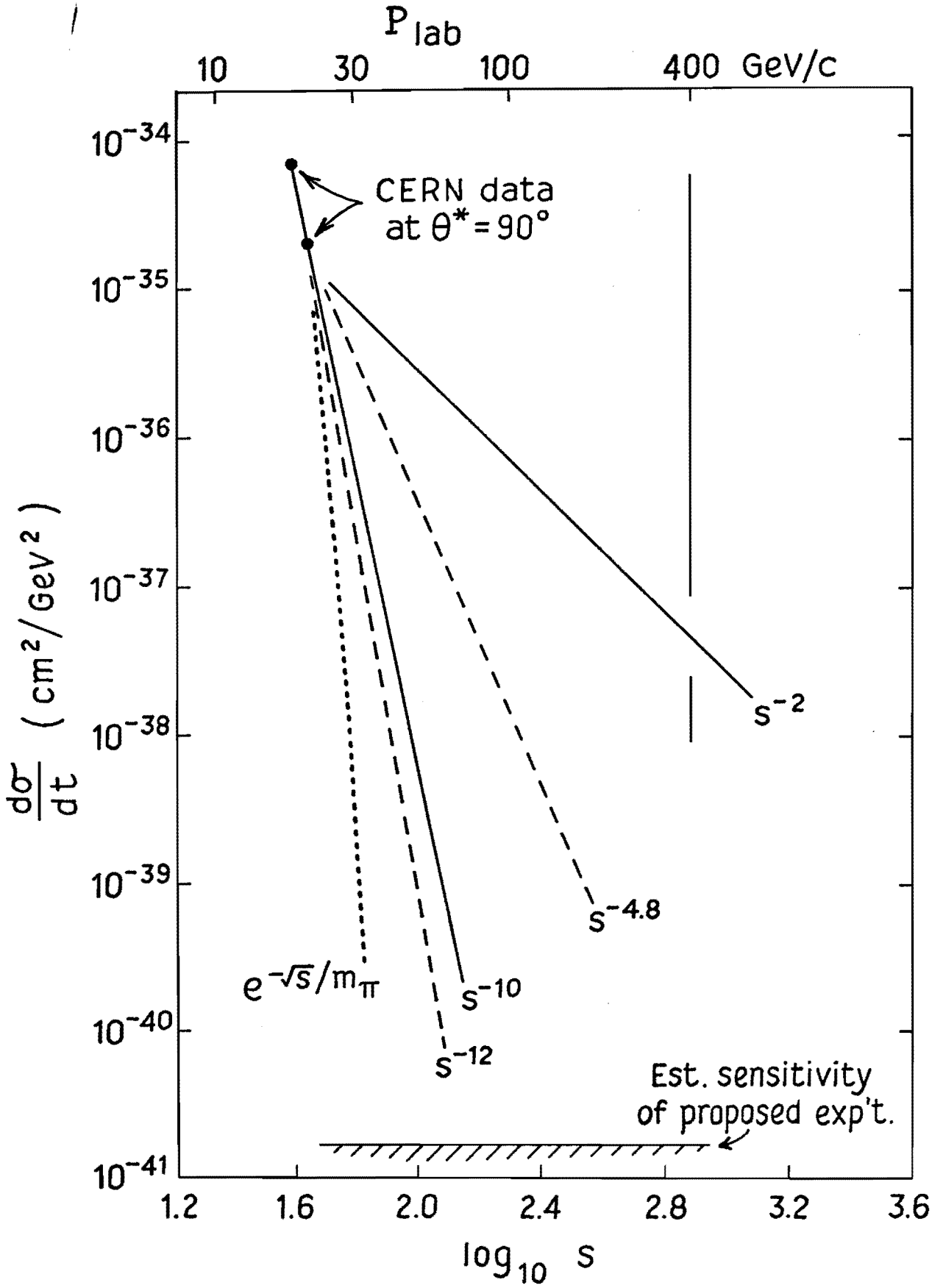
P lab
10
30
100
400 GeV/c
CERN data
at θ* = 90°
10^{-34}
10^{-35}
10^{-36}
10^{-37}
10^{-38}
10^{-39}
10^{-40}
10^{-41}
$\frac{d\sigma}{dt}$ (cm²/GeV²)
s^{-2}
$s^{-4.8}$
s^{-10}
s^{-12}
$e^{-\sqrt{s}/m_\pi}$
Est. sensitivity
of proposed exp't.
1.2
1.6
2.0
2.4
2.8
3.2
3.6
$\log_{10} s$

Figure 1

experiment is $\sim 10^{-3500}$. The experimental result was $\sim 10^{-4}$! Fortunately the discouraging predictions of the Thomson model did not deter Geiger and Marsden from their landmark experiment. The Thomson model, we might add, is quite reminiscent of the quark-gluon models currently popular for the hadrons.

The great importance of the proposed experiment is the significant probability that present theories will be confounded. Perhaps at the heart of a proton is a new super-strong force with an extremely short range. Even if we fail to find any elastic events we shall have set a stringent upper limit on the cross section. We shall also have gained the experience necessary to push the limit still lower in a second-generation experiment.

It is perhaps worth emphasizing that Fermilab is the only place where this experiment could be done (until the SPS is running well). Furthermore, now that the Proton Lab is able to deliver clean, intense proton beams the time is ripe for such an experiment.

Description of the Experiment

The apparatus, shown in Figure 2, is quite straightforward. Two well-shielded spectrometer arms are placed symmetrically at angles of ±3.9° from the proton beam. The arms are fairly short to get a reasonably large acceptance. A relatively large bend is used to sweep out low energy particles and insure that neutral particles from the target cannot reach the calorimeters

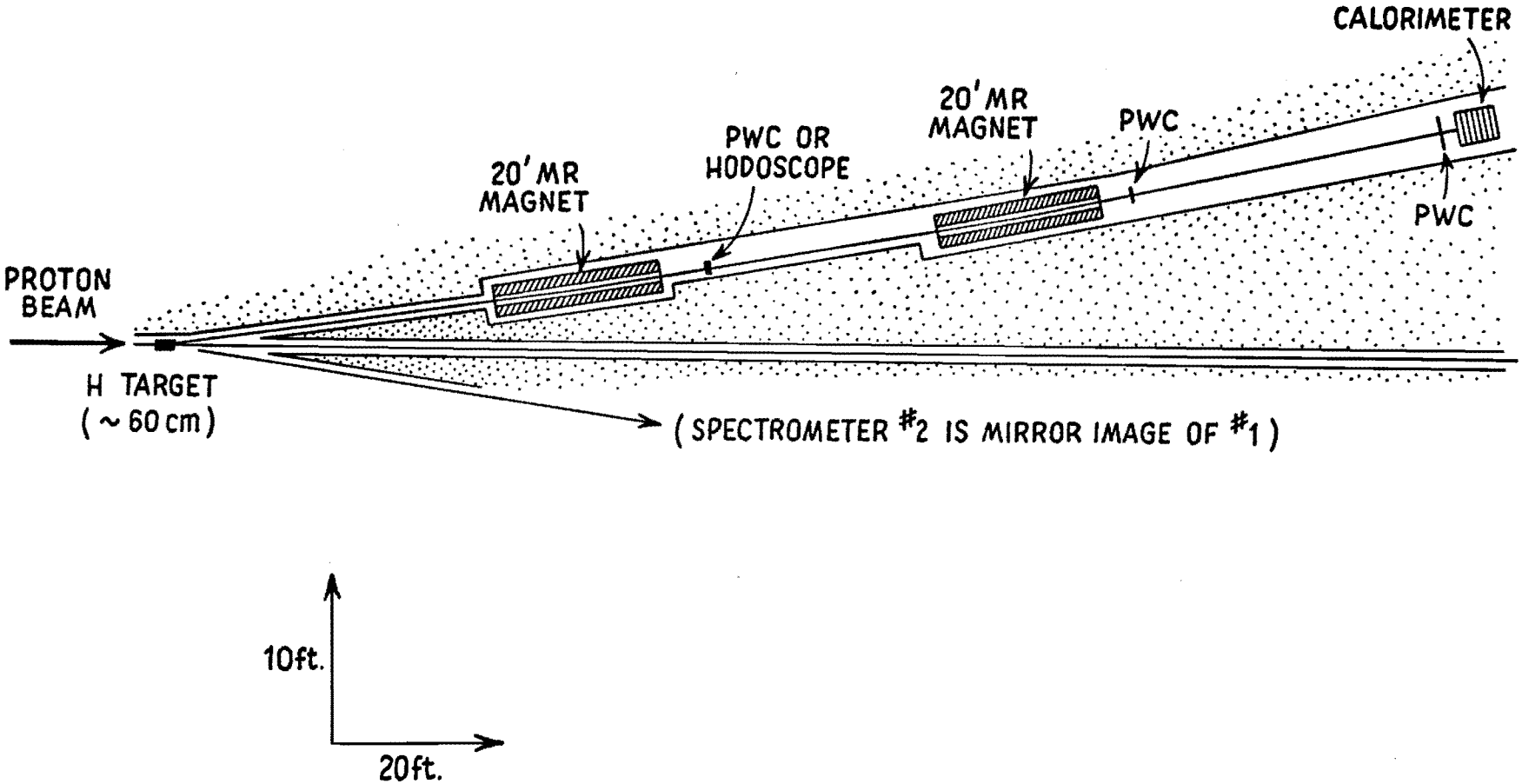
CALORIMETER
20' MR MAGNET
PWC
PWC OR HODOSCOPE
20' MR MAGNET
PWC
PROTON BEAM
H TARGET
(~ 60 cm)
(SPECTROMETER #2 IS MIRROR IMAGE OF #1)
10ft.
20ft.

Figure 2

directly. No detectors are placed ahead of the first magnet. Just downstream of the first magnet is a proportional wire chamber (or scintillator hodoscope). Two more PWC's follow the second magnet.[8] It seems best to bend the scattered protons away from the proton beam. This reduces the background in the detectors at the cost of a slight loss in solid angle.

The production angles of the two particles are determined by extrapolating their trajectories back to the hydrogen target. The resolution in coplanarity is limited mainly by the height and divergence of the proton beam. If the spatial resolution in the PWC's is $\approx$ 1 mm, the momentum resolution of the spectrometers is approx. 0.6%. The rms energy resolution of the calorimeters for 200 GeV protons is 6.1 %.[9] The calorimeters have a time resolution ~1 ns if the position of the incoming particle is known.[10] Thus they are easily capable of resolving individual rf buckets. We would require that the momentum determined by the spectrometer be consistent with the energy deposited in the calorimeter. This would eliminate many sources of background, in particular, most events originating from sources other than the hydrogen target. There would be a four-constraint fit to elastic scattering with considerable redundancy.

Note that the calorimeters are ideal detectors for this experiment. They are fast, insensitive to muons, and will be little affected by backgrounds of hadrons with energies <<

200 GeV. The limiting factor as far as singles rates is likely to be the PWC's (or scintillator hodoscope) just after the first magnets. [PWC's are slower but are less sensitive to photons and neutrons. A scintillation counter hodoscope would give slightly poorer spatial resolution. We believe the choice should be made after some background studies are done.]

Equipment Requirements

We would hope that Fermilab would supply the hydrogen target, the beam lines, four 20-ft main ring magnets (two without the inner coils), and some electronics. We would supply the calorimeters (which already are in use in the M3 beam line[11]), PWC's, scintillation counters, and data acquisition computer.

Running Time Requirements

Since we are hoping to measure an extremely small cross section it seems more appropriate to assume a reasonable running time and estimate what minimum cross section we can reach.

For this estimate we assume:

(1) A running time of 600 hrs at 60% efficiency [i.e., (live time of experiment) x (live time of accelerator) ≥ 60%].

(2) A proton beam intensity of 3×10^{12} protons/pulse and 360 pulses/hour. This corresponds to a total number of incident protons

$$N_p = 3\times10^{12}\ \frac{\text{protons}}{\text{pulse}} \times 360\ \frac{\text{pulses}}{\text{hr}} \times 360\ \text{hrs} \cong 3.9 \times 10^{17}\ \text{protons}$$

(3) A liquid hydrogen target 60 cm long so that the number of protons/cm^2 is $\sim 2.5 \times 10^{24}$.

(4) A limiting aperture in each spectrometer of 2.0" x 8.0" at 110 ft. so that $\Delta\Omega_{lab} \cong 10^{-5}$ sr.

In the CMS,

$$\Delta\Omega_{cm} = \Delta\Omega_{lab} \left(\frac{d\Omega_{cm}}{d\Omega_{lab}}\right) = 10^{-5} \times 215 \cong 2.0 \times 10^{-3} \text{ sr.}$$

(5) It takes ≥ 2 events to measure a cross section.

$$\text{Events} = 3.9 \times 10^{17} \times 2.5 \times 10^{24} \times \left(\frac{d\sigma}{d\Omega}\right)_{cm} \Delta\Omega_{cm}$$

$$2 \cong 10^{42} \frac{P_{cm}^2}{\pi} \left(\frac{d\sigma}{dt}\right)_{min} \Delta\Omega_{cm}$$

$$\left(\frac{d\sigma}{dt}\right)_{min} = 2 \times 10^{-42} \times \frac{\pi}{(13.7)^2} \times (2 \times 10^{-3} \text{ sr})^{-1}$$

$$\cong 1.6 \times 10^{-41} \text{ cm}^2/(\text{GeV/c})^2$$

In addition to the 600 hrs for data taking we would need approx. 400 hrs. for tuning, testing, and background studies.

Background Estimates

For an elastic event we require two 200 GeV protons coming off on either side of the beam within the same rf bucket. They must be coplanar with the beam and their space angles must satisfy the condition for an elastic event. Furthermore the energy deposited in each calorimeter must be consistent with the momentum from the spectrometer. These constraints are extremely powerful in rejecting background.

Accidental coincidences between the two arms should not

be a problem. (See below.) The main difficulty is likely to be from nearly elastic events. If a pion is formed and carries off $\leqslant$ 1% of the energy and little transverse momentum, the event would look like an elastic one. Such a background, if it exists, would have to be corrected for by extrapolating from the region of clearly inelastic events. Radiative corrections may fuzz out the elastic peak slightly[12] but, this should not cause any serious problems.

We can estimate the rate at which energetic hadrons reach the calorimeters from the data of Cronin et al.[13] for inclusive production by 300 GeV protons. Their data for $p_T > 4.5$ GeV/c for π^+ and protons combined can be fitted fairly well by the expression

$$E \frac{d^3\sigma}{dp^3} \cong 1.3 \times 10^{-27} \cdot e^{-3p_T} \quad (\mathrm{cm}^2/\mathrm{GeV}^2\text{- nucleon})$$

For the experimental arrangement in Fig. 2, particles with momenta $\leqslant$ 100 GeV/c are bent too much to reach the calorimeters. This corresponds to $p_T \leqslant 7$ GeV/c. The data of Cronin et al. extend only to $p_T \leqslant 7$ GeV/c so we must extrapolate their results to larger p_T. If we integrate the above expression for $p_T > 7$ GeV/c, then for the experimental arrangement in Fig. 2 we obtain for the singles rate in each calorimeter 0.05 counts/ (3×10^{12} protons). As pointed out earlier, the calorimeters will hardly notice muons and low energy hadrons. Thus we do not anticipate any rate problems with the calorimeters, the key elements in the experiment.

Optimization of the Experiment

We believe that the experimental arrangement shown in Fig. 2 is a reasonable and conservative design that will allow a measurement with the sensitivity estimated above. It may indeed be overly conservative. Perhaps the spectrometers could be shortened or larger aperture magnets used if available.

There are also questions about the proposed design that need to be answered. Should the detector following the first magnet be a scintillator hodoscope or PWC? Are gas cerenkov counters desirable? Experimental information on backgrounds is also needed.

In view of these questions we propose that some preliminary testing be made with a reasonable facsimile of one spectrometer before the final design is solidified. This will allow a better measurement and more efficient use of accelerator time and other resources. For this testing a thin H_2O target could be used with a beam intensity $\sim 10^{12}$/pulse.

This experiment is most appropriate for the Proton Lab. Proton West would seem to be the best choice. Space requirements are quite modest so we anticipate little problem fitting the experiment in. The best location would be decided in consultation with FNAL staff.

Another option to be considered in consultation with the Program Advisory Committee would be to make measurements at a lower beam energy, say P_{lab} = 100 GeV/c. This could be done

with a front porch spill. This approach is clearly more conservative, and we would be happy to pursue this option. The main disadvantage is that it would be less compatible with other experiments which might otherwise run simultaneously.

We have also considered first taking data at lower $|t|$ with full-energy (400 GeV) protons. For example, at 60° c.m. and $|t| = 187\ (\mathrm{GeV/c})^2$, the final state protons have momenta of about 100 and 300 GeV/c with lab angles of 6.8° and 2.3° respectively. We could then move to larger $|t|$ in subsequent running. We prefer to first explore the largest $|t|$ possible and to subsequently consider lower $|t|$ for several reasons, primarily the greater theoretical interest in the data for the maximum $|t|$. It should be noted that there would be significant rerigging required for changes in lab angle exceeding a fraction of a degree.

References and Footnotes

1. AEC Authorizing Legislation F.Y. 1965, part 3, p. 1701.
2. J. Allaby et al., Phys. Lett. 25B, 156 (1967).
3. G. Cocconi et al., Phys. Rev. Lett. 11, 499 (1963).
4. R. Hagedorn, Suppl. to Nuovo Cim. 3, 147 (1967).
5. S. Frautschi, Phys. Rev. D3, 2821 (1971).
   S. Frautschi, Nuovo Cim. 12A, 133 (1972).
6. (a) S. Brodsky and G. Farrar, Phys. Rev. Lett. 31, 1153 (1973).
   (b) J.F. Gunion et al., Phys. Rev. D8, 287 (1973).
   R. Blankenbecler et al., Phys. Rev. D8, 4117 (1973).
7. S.M. Berman, J.D. Bjorken, and J.B. Kogut, Phys. Rev. D4, 3388 (1971).
8. A gas cerenkov counter could, of course, be installed ahead of the calorimeter to reject pions. At the moment we see no need for this.
9. L.W. Jones et al., Nucl. Instr. and Meth. 118, 431 (1974).
10. H.R. Gustafson et al., Search for New Massive Long-Lived Neutral Particles, UM HE 76-11, submitted to Phys. Rev. Lett.
11. One of the existing calorimeters is somewhat smaller than the other. We have the option of making the two spectrometers somewhat asymmetrical or building another calorimeter.
12. M.R. Sogard, Phys. Rev D9, 1486 (1974).
13. J.W. Cronin et al., Phys. Rev. Lett. 31, 1426 (1973).