Fermilab Proposal # 458

Scientific Spokesman:

Wonyong Lee
Columbia University
(914) 591-8100

PHOTOPRODUCTION EXPERIMENT AT FERMILAB

B. Knapp, W. Lee, L. Moscoso, P. Sokolsky
Columbia University, New York, N.Y.

G. Gladding, R. Messner, T. O'Halloran, C. Pang, A. Wattenberg
University of Illinois, Urbana, Illinois

M. Binkley, I. Gaines, R. Orr, J. Peoples
Fermi National Accelerator Laboratory, Batavia, Illinois

October, 1975

I. Introduction

We propose to continue and extend the program of photoproduction and pair production studies currently being carried out in Experiment E-87. The goals of the physics program we propose are:

(i) to look for $\mu^{\pm}+e^{\mp}\nu$'s final states.

(ii) to study the mass spectra of hadronic final states which are produced in association with a single charged lepton (electron or muon).

(iii) to determine the properties of a selected number of photoproduced multi-body hadronic final states; in particular:

$$\begin{aligned}\gamma + A &\rightarrow (\bar{p}p\pi^+\pi^-) + A\\ &\rightarrow (\pi^+\pi^-\pi^+\pi^-\pi^0) + A\\ &\rightarrow (K^+K^-\pi^+\pi^-) + A\\ &\rightarrow (K^+K^-\pi^+\pi^-\pi^0) + A\\ &\quad \text{etc., etc.}\end{aligned}$$

The need for a heavy lepton pair production experiment is more crucial today than when we first proposed this experiment five years ago. The μe pairs observed recently at SPEAR can be interpreted as arising from the decay of 2 GeV/c^2 heavy leptons. We feel there is a compelling need to demonstrate that such μe pairs are observed in at least one other reaction before such an interpretation can be considered completely satisfactory. To the best of our knowledge, the only independent reaction in which one might expect to observe such events is the pair production of heavy leptons. The broad band photon beam at Fermilab is perhaps the only beam in which such a pair production experiment

is feasible. In addition, the probability of mis-identifying two hadrons as a μe pair is extremely small (10^{-6}) at Fermilab energies--several orders of magnitude smaller than at SPEAR.

Our primary motivation for examining the photoproduced hadronic final states such as $\pi^+\pi^-\pi^+\pi^-\pi^0$ and $K^+K^-\pi^+\pi^-\pi^0$ is to search for structure in the mass spectra of these states. We propose to do so by both measuring and identifying these final state particles. We expect to observe hadronic decays of $\psi(3.1)$, $\psi(3.7)$, and other structures at higher masses.

II. Physics Objectives and Rates

All the physics objectives to be described in this proposal are natural extensions and outgrowths of the program begun in Experiment E-87. Indeed the major reason we are convinced the physics proposed here can be completed successfully is because of the experience we have gained in E-87, i.e., we are well aware of the strengths and limitations of both the wide band beam and our own pwerful detection system.

(a) Pair Production of Heavy Leptons

The interpretation of the μe events observed at SPEAR as an indication of the possible existence of a heavy lepton is extremely provocative. We feel that a decisive test of this interpretation requires the observation of μe pairs arising from a different production mechanism; the pair production process is clearly such a mechanism.

We have made detailed calculations of the rates at which heavy leptons would be produced and detected using the basic experimental layout of Experiment E-87. The pair production cross sections we have used in this calculation have been provided

by Y. Tsai, and are typically $2(10^{-34})cm^2$ for an incident photon of E_γ = 200 GeV. Integrating the yield over the photon energy spectrum we can determine the total number of heavy lepton pairs produced in the wide band beam. The average detection efficiency of our apparatus for detecting both the electron and the muon arising from the decays

$$\text{heavy lepton} \rightarrow e^{\pm} + \nu + \bar{\nu}$$
$$\rightarrow \mu^{\pm} + \nu + \bar{\nu}$$

is large; typically 30% of all such decays are detected if they arise from 2 GeV/c^2 heavy leptons which are pair produced by 75 GeV photons. In a 600 hour run at an average intensity of 5×10^{12} protons per pulse, the number of $\mu^{\pm}e^{\mp}$ events detected would be 1000 B^2, where B is the branching ratio into the leptonic channel, i.e., $B = \lambda \rightarrow e\nu\nu/\lambda \rightarrow \text{all}$. If B = .2, then the total rate would be 40 events (see Fig. 2 for detail calculation).

The size of the event sample we propose collecting is approximately equal to the number of μe candidates observed at SPEAR. The dominant feature that will make our event sample particularly compelling arises from the phenomenally improved ability one has for identifying electrons and muons at high energy compared to low energy.

In the subset of data from E-87 which we have analyzed thus far, we have observed one μe candidate which is consistent with the hypothesis of heavy lepton pair production. (See talk presented by W. Lee at SLAC Conference 1974.) Although we make no claims for this one event, the relevant point is that by performing this analysis we have been able to <u>measure experimentally</u> our μ/π and e/π rejection ratios. Consequently, we have experimental data that allows us to determine the improvements that

need to be made to our detector in order to have adequate rejection of hadrons at the cross section level expected for heavy lepton pair production. The detector improvements are discussed in Section III. Another interesting source of μe events would be leptonic decays of charmed particles. The production and decay of charmed particle pairs is discussed in (b).

(b) The source of single charged leptons in hadron-hadron collisions and of charged lepton pairs in neutrino-hadron collisions is unexplained, although several interesting conjectures have been put forward. We will consider three possible mechanisms for producing a single charged lepton in photon-hadron collisions. For the first one we assume that single charged leptons are a general property of central hadron collisions. Since the photon-nucleon total cross section is dominated by the contribution of vector mesons interacting with the nucleons we would expect that the number of direct produced charged leptons should be $\sim N\pi \times 10^{-4}$ of the total photon-nucleon cross section. The effective cross section for single lepton production would then be of order $10^{-31} cm^2$ per nucleon for an incident photon energy of 100 GeV.

For the second possibility we assume that the single charge lepton could be due to the photoproduction of a charmlike-anti-charmlike pair of hadrons, followed by the semileptonic decay of one of these particles.

A speculative estimation of the cross section can be made from the following assumptions

(i) the $\psi(3.094)$ is a $c\bar{c}$ bound state. When the interact with nucleons the dominant inelastic process is dissociation.

(ii) the forward scattering amplitude of the $\psi(3.094)$-nucleon is very nearly imaginary.

(iii) vector dominance is applicable to the photoproduction of the $\psi(3.094)$ on nuclei.

With these assumptions one arrives at a cross section of $10^{-30}cm^2$ for $c\bar{c}$ pair production. If the probability for a semi-leptonic decay of a c is 10%, then the cross section for single lepton production by this mechanism would be $10^{-31}cm^2$.

A third mechanism for the production of single leptons would be through the production of a pair of heavy leptons, followed by the decay of one of these leptons into a ν plus hadrons while the other decays leptonically as described in (a). If the heavy lepton had a branching ratio as assumed in (a), the cross section for single charged lepton production would be six times that of the $\mu^{\pm}e^{\mp}$ final states. The cross section would be of the order of $10^{-34}cm^2$, approximately 10^{-6} of the total photon-nucleon cross section. We would not expect this mechanism to dominate the single lepton final states. Nevertheless there are certain final states which may arise more prominently from this mechanism than the preceding ones. Consider the decays

$$\lambda_1 \to K^{\pm} + \nu_\lambda \qquad \lambda_2 \to e + \nu_e + \nu_\lambda$$
$$\to p^{\pm} + \nu_\lambda$$
$$\to K^{*\pm} + \nu_\lambda$$

The electron signal will give adequate rejection of hadrons.

Our intent here is to first establish the level of direct produced single leptons in photoproduction (if this has not been done in E-87) and second to determine which type of mechanism is most likely. Moreover we would be able to determine whether the

particle composition contains unusual amounts of strange particles, neutrals such as η and η', and baryon-antibaryon pairs. It is possible to identify new states with our proposed detector. We estimate our efficiency for detecting all of the decay products of one member of the $c\bar{c}$ pair and at least the lepton from the other member of the pair to be of the order of 10%. The principle assumption which went into this estimation was to assume that multiplicity of a hadronic decay of a c would be the same as the comparable multiplicity in a hadron-hadron collision at a center of mass energy of 2 GeV. On this basis we would expect to detect 10 of these events/day. The number of events stemming from a particular decay mode is, of course, unknown.

The principle limitation in our detector for this experiment is the size of the magnet aperture. The particle identifier and most of the proportional chambers could be used with a much larger magnet as was proposed in the original E-87 proposal. With a magnet of 1000 in^2 it would be possible to detect all of the decay particles resulting from the production of a $c\bar{c}$ pair.

(c) the number of $\psi(3.1)$ decaying into $\pi^+\pi^-\pi^+\pi^-\pi^0$ which we detect in this experiment is expected to be ~500. The purpose of putting this number down is to illustrate the sensitivity of the experiment. The number ~500 is very similar to the number acquired by SPEAR. We know that the ratio $\psi\to\mu^+\mu^-/\gamma\to\mu^+\mu^-|_{m=3.1}$ is considerably larger in our experiment than at SPEAR. We believe that it is possible that some new and therefore, interesting hadronic final states could be detected by us, while they might not be as easily recognized at SPEAR. These final states will also be analyzed in terms of a pair production of charmed particles.

III. Detector Improvement

The detector system which will allow us to carry out the physics program described above is basically an extension and improvement of the magnetic spectrometer and particle identification system used in Experiment E-87. We describe here the modifications and additions we plan to make to the existing experimental layout and we summarize how these detectors will extend and improve the scope of the physics program we will pursue.

(a) Cerenkov Detectors

The two Cerenkov counters shown in Fig. 1 will be used in a conventional fashion to provide detailed information and particle identification on the character of the photoproduced final state. A detailed design and test program is currently in progress to optimize the parameters of these counters for the range of secondary momenta contained by our spectrometer. The precise momentum range over which these counters will provide separation of pions, kaons, and protons, will not be determined until the final design is complete. We estimate that we will be able to achieve π-K-p separation up to ~100 GeV/c. At lower momentum $e^{\pm}$ identification will improve considerably with the Cerenkov detectors.

(b) π^0/γ Detector

The addition of a π^0/γ detector to the experimental apparatus described above will provide us with the ability to do both complete identification and reconstruction of very complicated final state topologies. The existing electromagnetic shower detectors already yield a measure of the energies of both photons and electrons with a precision on $\pm 4\%$ at 16 GeV. We plan to add a new-type of proportional wire chamber that will measure the position of the

electromagnetic shower after a depth of 4-6 radiation lengths into the electromagnetic cascade. This depth is large enough to ensure that virtually 100% of the photons have begun to cascade but small enough so that the center of gravity of the shower has not begun to spread significantly in a lateral direction.

The novel feature of the proportional wire chamber we will use to measure the photon conversion point is that it will measure the pulse height and the center of gravity of the electromagnetic cascade with an accuracy of $\lesssim$ 1 cm. The addition of this detector will greatly improve $e^{\pm}$ identification.

We have constructed a prototype proportional wire chamber of the type we plan to use. The signals induced on the cathode plane of the chamber, by the charged particles in the electromagnetic cascade of a converted photon, are detected and pulse height analyzed. We are developing the electronics to provide a measurement of the centroid of the pulse height distribution and plan to test the prototype and associated electronics in the next several months.

Request for Running Time

1) 100 hours of testing

2) 200 hours of low intensity run ($\sim 10^{12}$ ppp) to take data on hadronic and charged leptonic and hadron final states

3) 400 hours of high intensity run ($\sim 5 \times 10^{12}$ ppp) for $e\mu$ and charged lepton and hadron final states.

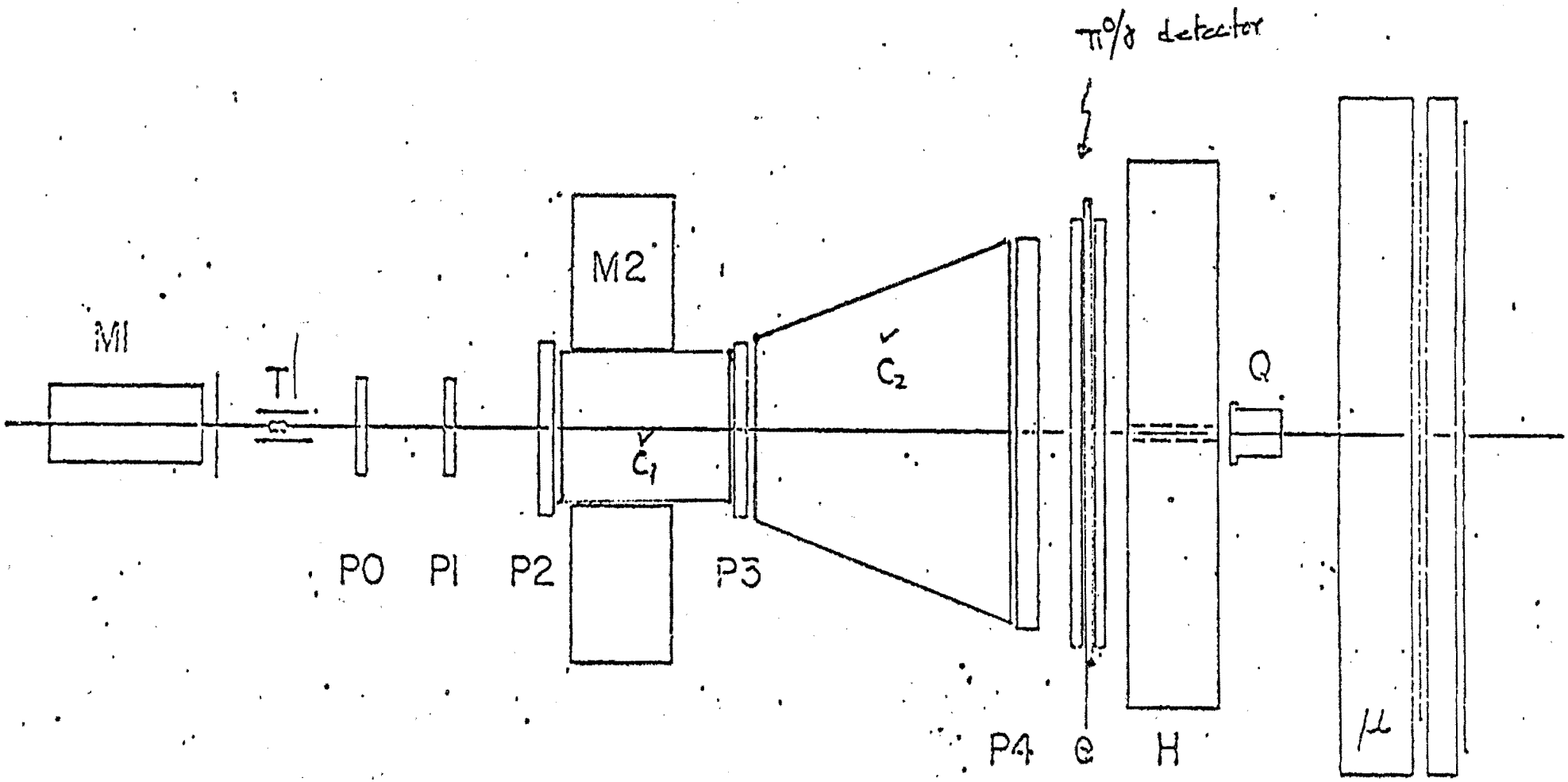

Fig 1.

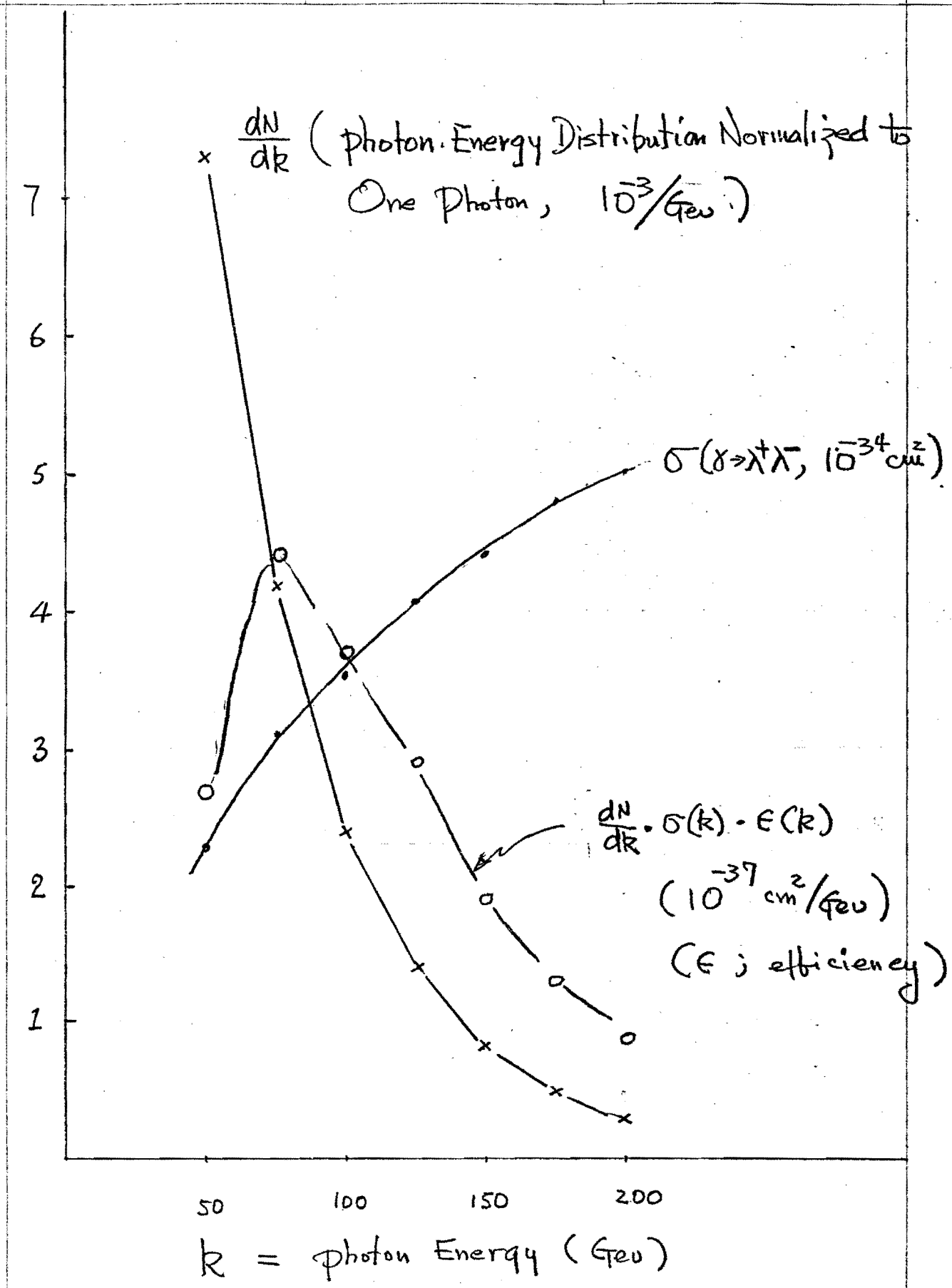
dN/dk (Photon Energy Distribution Normalized to One Photon, 10^-3/Gev)
σ(γ→λ+λ−, 10^-34 cm²)
dN/dk · σ(k) · ε(k)
(10^-37 cm²/Gev)
(ε ; efficiency)
7
6
5
4
3
2
1
50
100
150
200
k = photon Energy (Gev)