FERMILAB PROPOSAL No. 427

Scientific Spokesman:

Luke C. L. Yuan
Brookhaven National Laboratory
Upton, L.I., New York

8 - 516 - 345-6262

A Proposal for Testing a Transition Radiation Detector and a High Energy Shower Detector for Cosmic Ray Experiments

Luke C.L. Yuan, H. Uto, G.F. Dell and R. Keller

Brookhaven National Laboratory
Upton, L.I., New York

April 4, 1975

A PROPOSAL FOR TESTING A TRANSITION RADIATION DETECTOR AND A HIGH ENERGY SHOWER DETECTOR FOR COSMIC RAY EXPERIMENTS

Luke C.L. Yuan, H. Uto, G.F. Dell and R. Keller

Brookhaven National Laboratory
Upton, L.I., New York

Scientific Spokesman, Luke C.L. Yuan

April 4, 1975

The objectives of this investigation are (1) to study the effectiveness of separating high energy electrons from pions or protons in an unseparated pion or proton beam in the 100 to 500 GeV region, and to optimize the design of a transition radiation detector system for the measurement of the electron spectrum in cosmic rays up to very high energies, and (2) to measure the efficiency and energy resolution of an electron shower detector at around 200 GeV.

INDEX

I. Physics Justification 1

Introduction 1

Experimental Arrangement for Chambers..... 2

II. Apparatus 3

III. Scope of the Experiment 4

Beam Line 4

Beam Requirements 4

Machine Time 4

Time Scale 4

Running Procedures 4

References 5

Figure Captions 6

Figures 7,8,9

I. PHYSICS JUSTIFICATION

Introduction

1. We have observed and measured transition radiation from pions[1] in the energy region of 100-250 GeV in the meson beam at FNAL.

2. We have also measured transition radiation from electrons at 50 GeV and determined the rejection ratio[2] of electrons from pions at this energy.

3. It is extremely important to be able to identify high energy electrons unambiguously from protons such as in cosmic rays in order to obtain the correct energy spectrum of high energy electrons. Thus far, all the energy spectra of electrons obtained in cosmic ray measurements probably contain an appreciable contamination of protons in the very high energy region.

4. Our test proposal consists of two phases: (1) with a hadron beam and (2) with an electron beam.

5. It is possible to estimate the average value of yield of transition radiation as a function of γ from the measurement at low energy electrons ($\sim$ a few GeV), but it is necessary to have accurate shape of spectrum (especially tail structure) to determine the rejection ratio accurately.

The main objective of this study is to obtain the most optimum parameters for the design of a transition radiation detector system including a shower detector such that one could utilize it to measure the true energy spectrum of cosmic ray electrons from a few GeV to 1000 GeV and the energy spectra of the very relativistic nuclei in cosmic rays. Such measurements are intended to be carried out in a shuttle space laboratory for which the experiments with the instrument payload of the highest performance are justified.

An accurate measurement of these very high energy spectra up to 1000 GeV would provide us very valuable information on (1) the origin of cosmic rays, (2) the propagation mechanism of electrons in the galaxy, and (3) the density of interstellar material and magnetic field.

Phase I

We plan to use the hadron beam in the meson area:

1. To optimize the sandwich type transition radiation detector system for cosmic ray experiments in order to obtain the best separation of protons from high energy electrons. We shall start with a 10 element sandwich system and optimize both the radiator parameters and MWPC gases for electrons at $\gtrsim$ 200 GeV ($\gamma \geq 4 \times 10^5$).

2. To investigate the resolution of an electron shower detector in the 200 GeV region for the determination of electron energies.

3. As a secondary objective, we plan to study transition radiation from π, μ, K, and e at 280 GeV, using xenon gas in the MWPC.

Phase II

To use an electron beam:

1. To study the energy dependence and other characteristics of a TR detector on electrons and protons with energies from 50 to 200 GeV.

2. To study more in detail a shower detector with electrons of extremely high energy.

3. To study a TR detector for possible use in electron tagging in e-p scattering experiments.

Experimental Arrangement for Chambers

The experimental arrangement is shown in Fig. 1. The detector consists of a large number of multiwire proportional chambers (10 to 30 chambers) and transition radiators. Each chamber has an active area of 6" × 6" and thickness of 2.2 cm. The sense wires are joined together to give a single signal output from a chamber. The chamber is filled with argon or xenon gas. Transition radiators consist either of 100 foils of ½ mil Mylar with air spacing of ~ 30 mil or of ~ 4" styrofoam (density is 0.025 g/cm^3).

The beam goes through a thin scintillation counter telescope, transition raidators, and multiwire proportional chambers. The proportional chambers detect x-ray transition radiation, ionization due to the primary charged particle, and background radiation. Signals from the chambers are combined to give a geometric mean or an arithmetic mean and are stored in a pulse height analyzer. The measurement is repeated with a background radiator consisting of a solid block of the same material as the transition radiator with the same thickness, but without the multitude of interfaces. The yield of x-ray transition radiation is obtained by comparing these two measurements.

An electron shower detector consists of four units of a lead (three radiation length thick) and a plastic scintillator (1/4 inch thick). This detector can measure the energies of electrons from a few GeV to 1000 GeV, by determining four points on a curve of shower development of an electron.

We shall add more lead and scintillators if we focus our measurement of the cosmic ray electrons at around 1000 GeV.

In Fig. 2, observed pulse height spectra with 30 chambers at 50 GeV are shown. Figure 2(a) shows an overlap of two spectra with transition radiators and with background radiators. A transition radiator consisted of 100 foils of 1/2 mil Mylar spaced at 30 mils. The trigger signal contained 8% of the electrons and 92% of the pions. The electron peak is shown at a higher pulse height channel in the spectrum with radiators. The high percentage of the electrons is due to the fact that we used the tail of spatial distribution of the M1 beam to reduce the effect of a high beam rate. Figure 2(b) shows an overlap of two spectra with transition radiators and with background radiators, including the signal of a shower counter into a trigger. This trigger signal contained 89% of electrons and 11% of pions. The pion peak is shown at a lower pulse height channel in the spectrum with radiators. The shower detector consisted of 16 units of 2-radiation length Pb and 1/4"-thick scintillator which were viewed by two 60 AVP phototubes through light guides.

II. APPARATUS

The layout of the apparatus for chambers is shown in Fig. 3. Each chamber has an active area of 6" X 6" and has a 3" wide frame of G-10. All chambers and radiators are mounted on a stand which has wheels. The stand contains the power supplies for the chambers and counters, some logic units and so on. Other apparatus like the electronics racks, a PHA, teletype, cabinets, and gas system is located near the wall away from the beam line. Only signal cables, an ac cord and gas hoses run between two systems of the detector and electronics racks.

The space of 10 to 15 feet along the beam line and 6 feet wide for the detector is required. It would certainly be more preferable to us if we could have a longer space along the beam line. A shower detector has 12-radiations length lead.

All the apparatus will be provided by the proposers and will be ready by the beginning of July, 1975. The entire system is valued at about $70,000.

The manpower needed from FNAL is small but we hope that we could have one collaborator from FNAL to participate in these tests.

III. SCOPE OF THE EXPERIMENT

The system has been tested at FNAL. The chamber system has been extensively used at the AGS and will be further tested to optimize the yield of transition radiation expected from pions and electrons at FNAL energies.

Beam Line

In Phase I, the M1 or other beam line in the Meson Area is suitable. In Phase II, the electron beam in the Proton Area is suitable. If the electrons in the Proton Area are used mainly for the tagged photons and the available beam time is very limited, we can do most of our studies in the Meson Area. If the electron beam is available, we want to explore the possibility of reducing the pion contamination in the electron beam using a TR detector. The pion contamination is 0.3% at 115 GeV.

Beam Requirements

1. The beam energy is between 50 and 280 GeV.
2. The momentum bite is 10 to 20%.
3. We can use beam rates of up to 10^5 particles/sec.
4. Several different beam energies, especially higher energy is preferred.

Machine Time

The setup time required without beam is about two weeks. The total running time requested with the beam is two weeks. We prefer to have two running periods to analyze data taken in the first period and make modifications for the second. A few days between two runs are sufficient.

Time Scale

Most of the apparatus except the shower detector is ready at the present time. The whole system will be operational by the beginning of July, 1975.

Running Procedure

The detector will be mounted on wheels as mentioned. It is to be emphasized that the transition radiation detector system has a very small amount of material (up to 0.1 radiation length) in the central region, and can be placed in the beam line without affecting the experiments

downstream. However, when the shower detector is tested, it has 12-radiation lengths of lead and it would affect the experiments downstream when it is placed in position. Possibly, some time sharing arrangements can be made for this particular part of the experiment.

References

1. Luke C.L. Yuan, P.W. Alley, G. F. Dell, R. Keller, and H. Uto, BNL Report 19651 (1975), being submitted for publication.

2. Luke C.L. Yuan, P.W. Alley, G.F. Dell, R. Keller, and H. Uto, BNL Report 19792 (1975), being submitted for publication.

Figure Captions

Fig. 1. The experimental arrangement for a transition radiation detector system and a shower detector.

Fig. 2. (a) Overlap of two spectra with transition radiators and with background radiators, measured using a TR detector in a beam of pions (92%) and electrons (8%) at 50 GeV.

(b) Overlap of two spectra with transition radiators and with background radiators, measured using a TR detector in a beam of pions (11%) and electrons (89%) at 50 GeV.

Fig. 3. Layout of the apparatus.

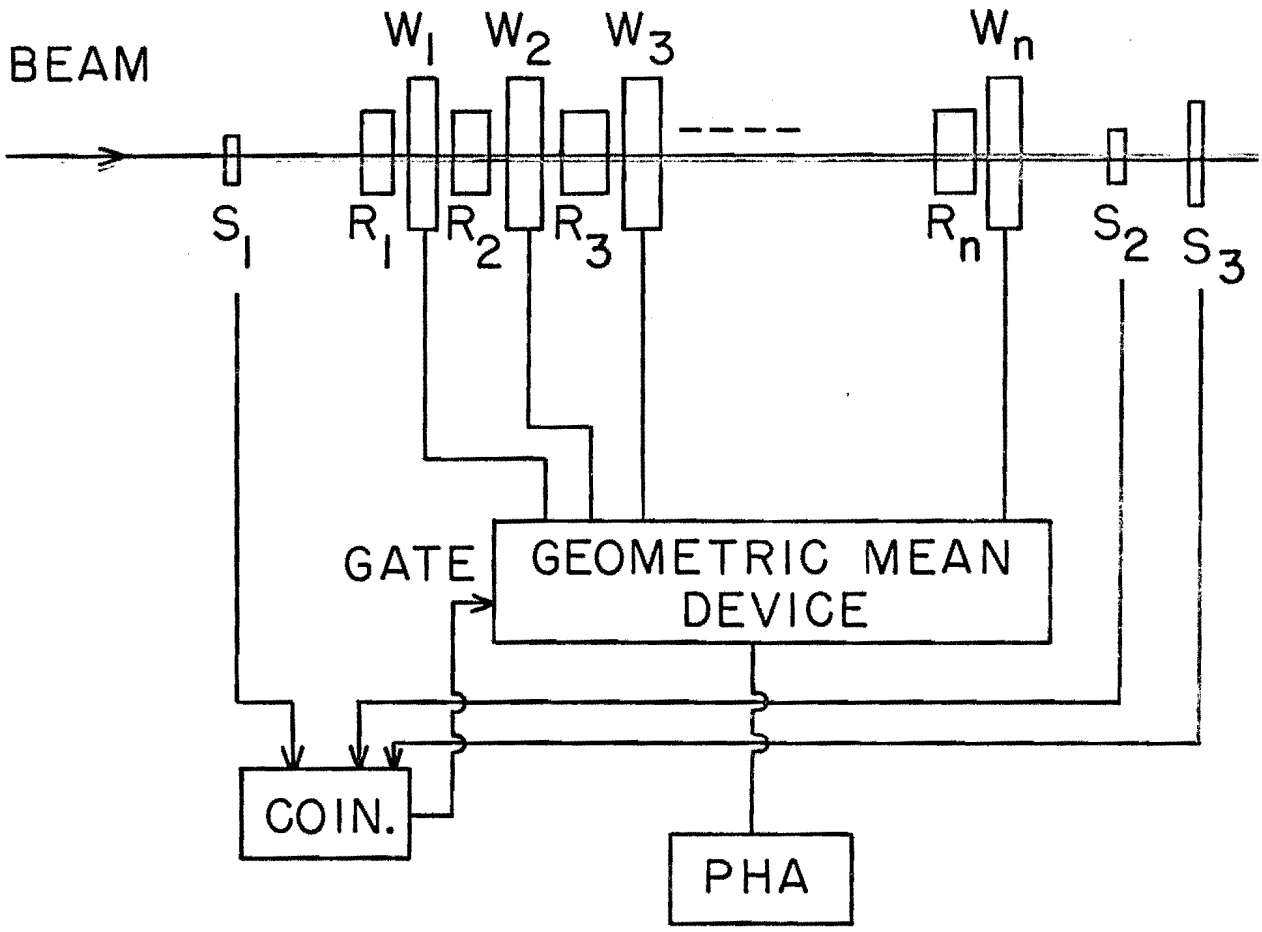

W_1, W_2, W_n; MULTIWIRE PROPORTIONAL CHAMBERS

R_1, $R_2 \ldots R_n$; TRANSITION RADIATORS

S_1, S_2, S_3; PLASTIC SCINTILLATION COUNTERS

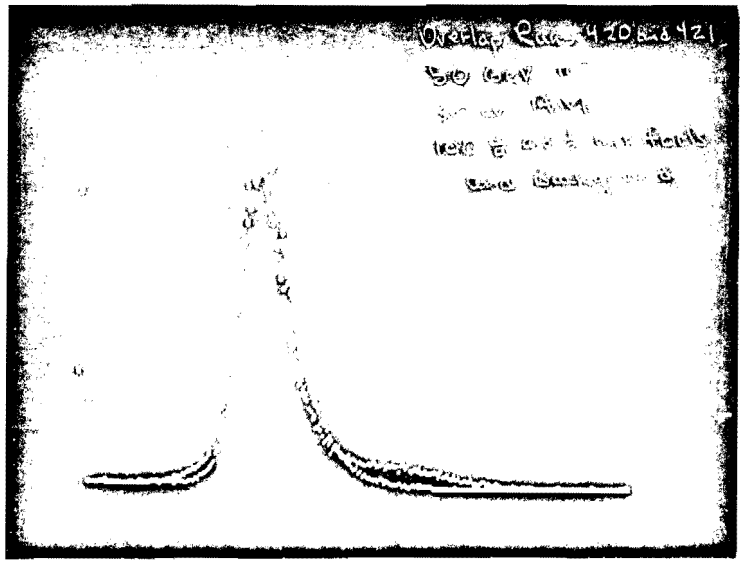

(a)

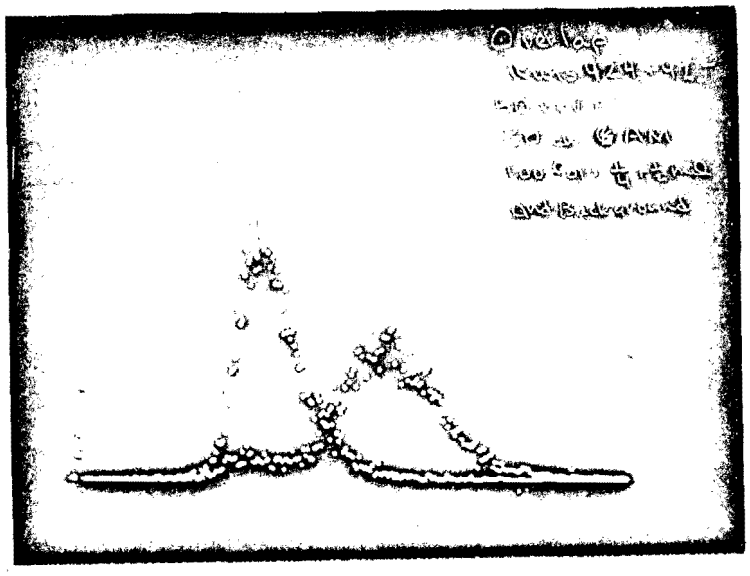

(b)

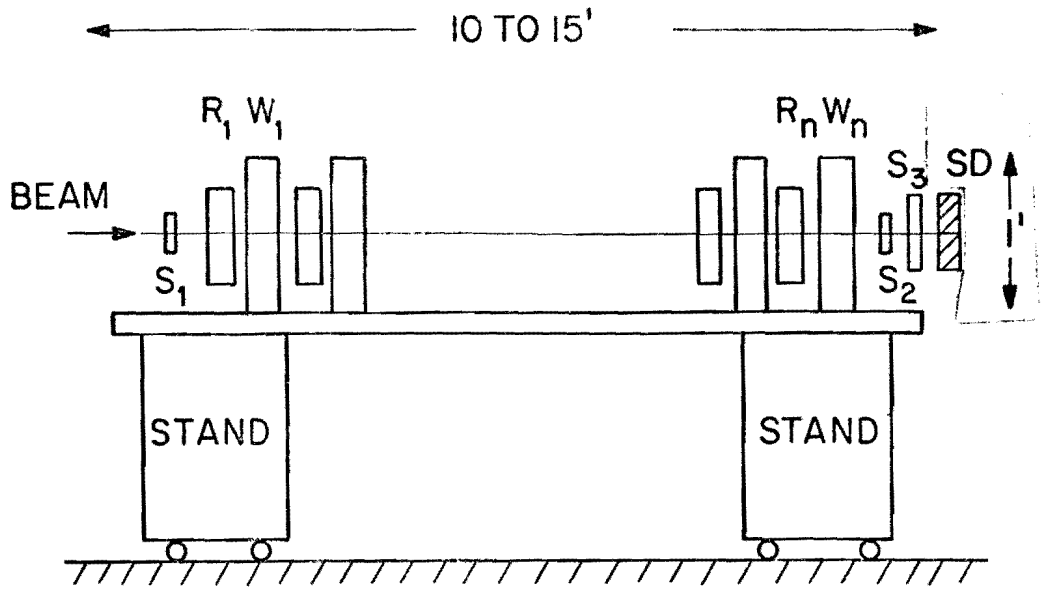

SIDE VIEW OF DETECTOR

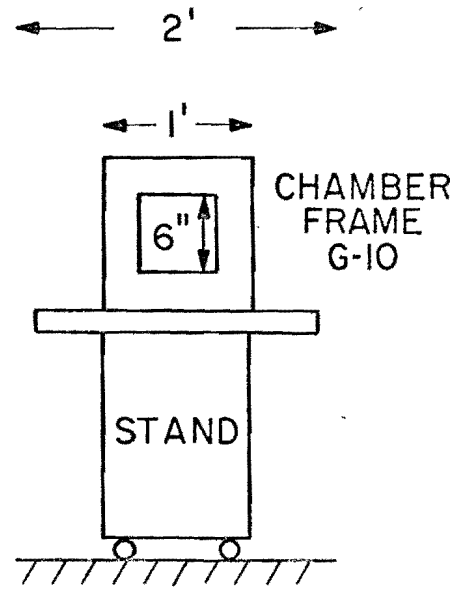

END VIEW

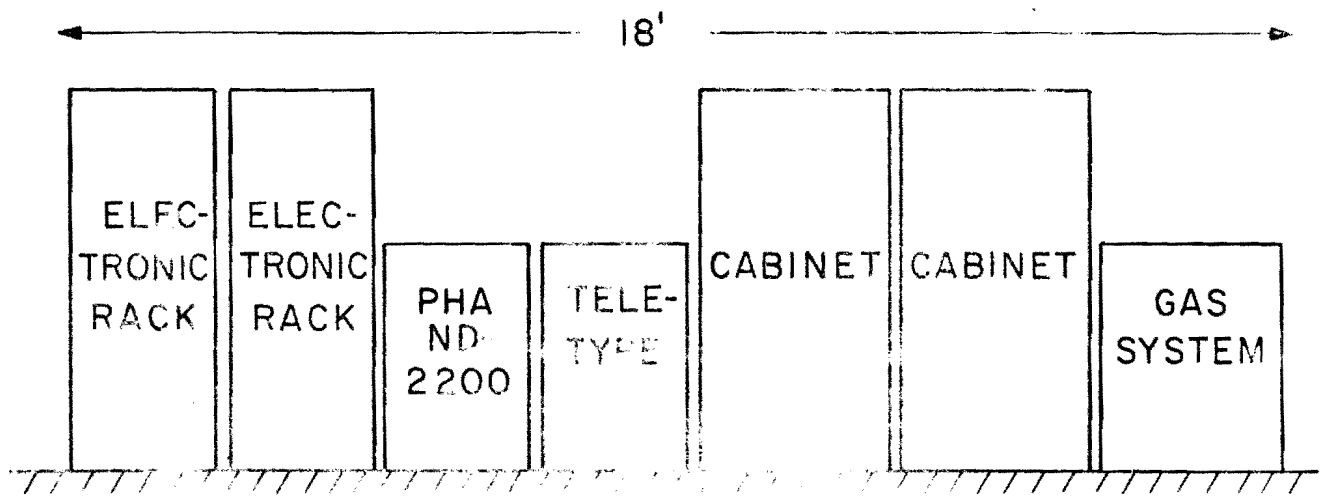

ELECTRONICS AND OTHER APPARATUS