# Search for $p+Cu \rightarrow \Lambda^{\circ}+\mu^{\pm}+X$ and $p+Cu \rightarrow K_s^{\circ}+\mu^{\pm}+X$ with 300 GeV protons

G. Bunce, R. Handler, R. March,
L. Pondrom* and M. Sheaff
University of Wisconsin
Madison, Wisconsin 53706

K. Heller and O. Overseth
University of Michigan
Ann Arbor, Michigan 48104

T. Devlin and R. Edwards
Rutgers University
New Brunswick, New Jersey 08903

## Abstract

A 400 hour run is requested in the neutral hyperon beam line in the Meson Lab to search for neutral strange particles in coincidence with directly produced muons from a copper target bombarded by 300 GeV protons.

*Spokesperson

## I. Introduction

This proposal results from yield measurements made of $\Lambda^\circ\mu$ and $K_S^\circ\mu$ coincidences in the E-8 apparatus in January, 1975. These preliminary measurements were made after a presentation at a special meeting of the FNAL program committee in December, 1974, subsequent to the announcement of the discovery of the new $(\psi,J)$ vector mesons. At that time the view was widely held that the new particles had some relation to a new strangeness quantum number, called charm, and that a family of charmed baryons and mesons awaited imminent discovery. The reasoning regarding $(\Lambda\mu)$ and $(K^\circ\mu)$ coincidences was that charmed states would decay preferentially into strange particles, and, if the decay was weak and semi-leptonic, a "prompt" muon would appear at the point of production, because the lifetimes of the new states were anticipated to be very short.

It is now by no means clear that the $(\psi,J)$ mesons have anything whatever to do with charm, or that such a quantum number exists at all. Direct production of $\mu$'s and e's by protons in complex nuclei at a level $(\mu,e)/\pi \sim 10^{-4}$ is however a well established phenomenon, observed in several different inclusive experiments. Whether a single lepton is always accompanied by its charge conjugate partner, or indeed what other particles tend to be produced along with the leptons, remain interesting open questions. The explanation of the single leptons in terms of pairs produced by the decay of the known vector mesons $(\rho,\phi,\psi)$ falls short of the observed yield by at least an order of magnitude, and also has difficulty accounting for the observed distribution of leptons in $p_\perp$.[1]

The experimental demonstration that directly produced muons tended to be accompanied by either $\Lambda^\circ$ or $K_s^\circ$ would furnish interesting added information regarding the source of the leptons. With a 5 meter magnetized iron muon filter and a detected $\Lambda^\circ$ flux of over 2,000 $\Lambda^\circ \to p\pi^-$/pulse, the E-8 set-up is in a unique position to answer this question.

II. Yields

A sample of $\sim$3,000($\Lambda^\circ\mu^\pm$) coincidences after accidentals subtraction was collected in January, 1975 using the spectrometer set-up shown in Fig. 1. These data established the following rates:

$$\begin{cases} (\Lambda^\circ\mu)/\Lambda^\circ \simeq (K_s^\circ\mu)/K_s^\circ \simeq 3 \times 10^{-4} \\ K_s^\circ/\Lambda^\circ = 1/7 \\ \Lambda^\circ \to p\pi^- = 40/10^6 \text{ protons on target.} \end{cases}$$

A typical proton beam intensity of $3 \times 10^7$ was used during these runs. A muon was defined as a single charged particle through one of the muon telescopes. The momentum bite subtended by the telescopes was 40 GeV/c $\leq p_\mu \leq$ 120 GeV/c. The yield increased towards lower $p_\mu$, and the sensitivity could be improved by lowering the threshold to 25 GeV/c. No preference for $\mu^+$ over $\mu^-$ was observed. Accidentals were typically 50%, but this can be improved by more careful attention to material near the collimator output, which was the source of much of the counting rate in the muon telescopes.

The central question regarding these muons is their ~~source of~~ origin. Figure 2 shows the collimator configuration near the copper target used during these runs. Roughly one meter of flight path in the magnetic field was available for the decay of a typical $\pi^\pm$ or $K^\pm$ produced along with the observed $\Lambda^\circ$ or $K_s^\circ$. Monte Carlo calculations, using a crude production model for $\pi$'s and K's

together with a $\Lambda^\circ$, indicate that the observed rates are not inconsistent with all of the muons arising from in-flight decays.

Extrapolation to infinite density cannot be done in the usual manner, because the hadrons ($\Lambda^\circ, K_s^\circ$) must live to get out, while the $\pi^\pm$ and $K^\pm$ must be absorbed. The magnetic field on the collimator (23 kg) could be used to bend the $\pi^\pm$, $K^\pm$ into a dense absorber, while allowing the neutrals to be trasported unscathed. Figure 3 shows a heavy met sleeve assembly 1.5 meters long, which, according to monte carlo calculations again, should decrease the decay in flight signal by a factor of two. By varying the density of material in this sleeve, information regarding the presence or absence of directly produced muons can be obtained.

III. Proposed Experiment

A total run of 400 hours is requested, to be divided roughly as follows:

a.) 150 hours at $5 \times 10^7$ protons/pulse and heavy-met collimator

b.) 100 hours at $5 \times 10^7$ protons/pulse and open (normal) collimator

c.) 100 hours at $5 \times 10^7$ and intermediate collimator

d.) 50 hours at $2 \times 10^7$ to check accidental subtractions

The yields for part (b) have been measured, except for some improvement by lowering the muon momentum threshold to 25 GeV/c, which will give perhaps a 50% increase. Thus part (b) may give 4500 ($\Lambda^\circ\mu^\pm$) and 700 ($K_s^\circ\mu^\pm$) events in 100 hours. Assuming no direct muon signal, the yield per hour for part (a) will be half as great.

The sensitivity of the experiment for detecting ($\Lambda^\circ\mu$) or ($K_s^\circ\mu$) direct production will depend on the confidence in the $\pi\to\mu$ decay in flight subtraction rather than on statistics alone. The $\pi\to\mu$

decay in flight signal is useful, however, in connecting the observed rates, or limits, with the inclusive $\mu/\pi$ ratio measurements done by other groups. The probability for decay in flight of a 50 GeV/c pion in 1 meter is roughly $3 \times 10^{-4}$. If the observed $(\Lambda^\circ + \pi \rightarrow \mu)$ rate is equal to this, then every $\Lambda^\circ$ is accompanied by a pion which would count in the muon telescopes as a $\pi$ if the iron absorber were absent. Suppose for the sake of argument that a direct muon signal $(\Lambda^\circ \mu)$ is isolated at a level $3 \times 10^{-5}$. Since the inclusive $\mu/\pi$ ratio results are $10^{-4}$, this implies that 30% of the time a direct muon is accompanied by a $\Lambda^\circ$. This argument can be refined by more detailed monte carlo calculations to reproduce the muon momentum spectrum observed and the behavior of the muon yield as the collimator is varied.

Reference

1.) J.A. Appel, et al, Phys. Rev. Letters (to be published); and L. Lederman (private communication). The authors are grateful to Prof. Lederman for discussions on this point.

$$e^{-\frac{ct}{c\tau}} = e^{-\frac{x}{x_0}}$$

$$x_0 = 3 \times 10^{8} \times 2 \times 10^{-8}, \quad \text{50 GeV}$$

$$= 1.8 \times 10^{3} \text{ meters}$$

$$\frac{1}{2 \times 10^{3}} = 5 \times 10^{-4}$$

FIG 2

# UPSTREAM COLLIMATOR DETAIL

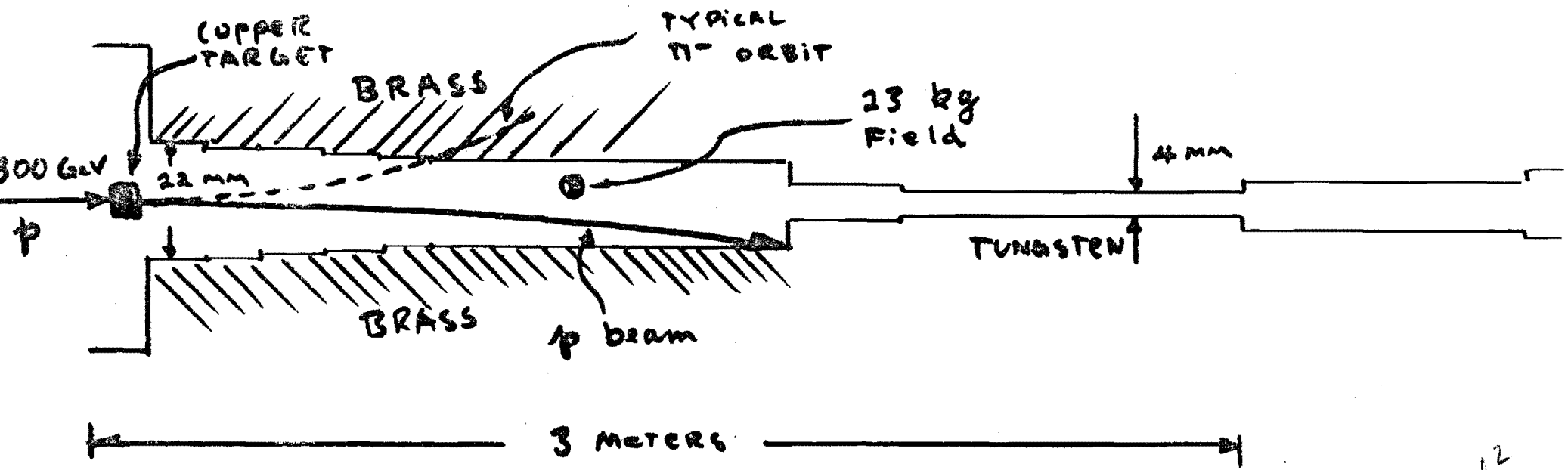


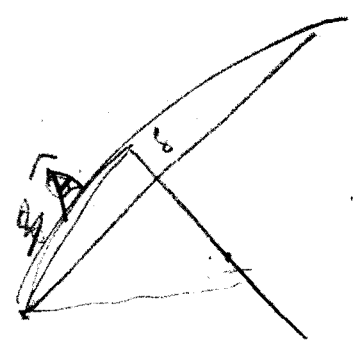

$\delta(2R-\delta)=\ell^2$

$A = \theta R = \frac{\ell}{R} R$

$2R\delta = \ell^2$

FIG 3

COLLIMATOR SLEEVE

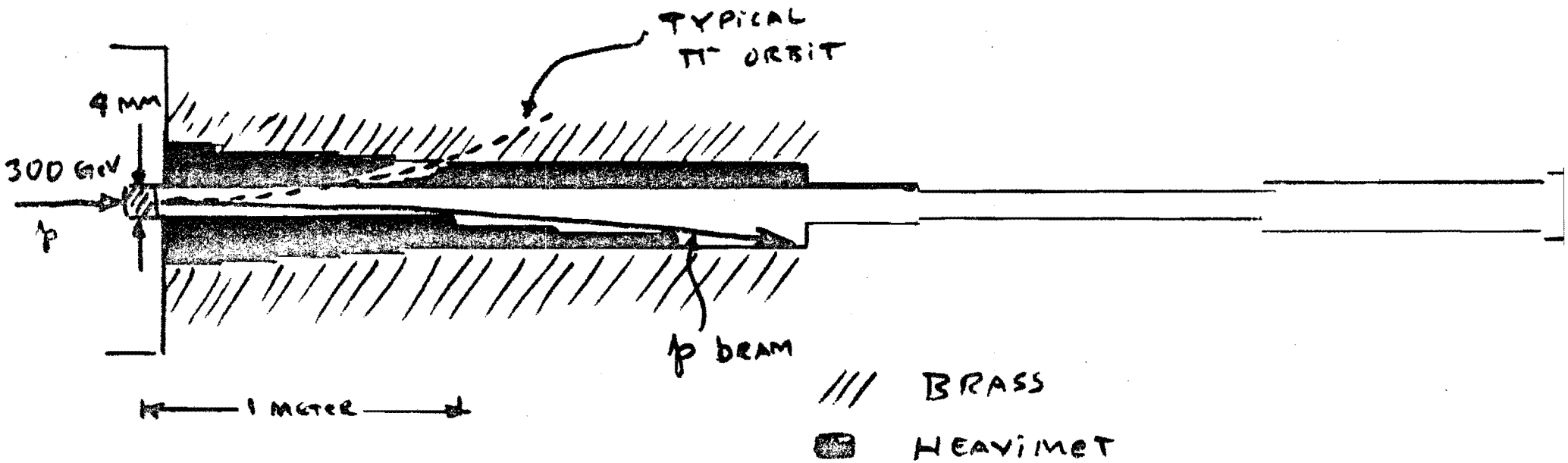

FIG 3
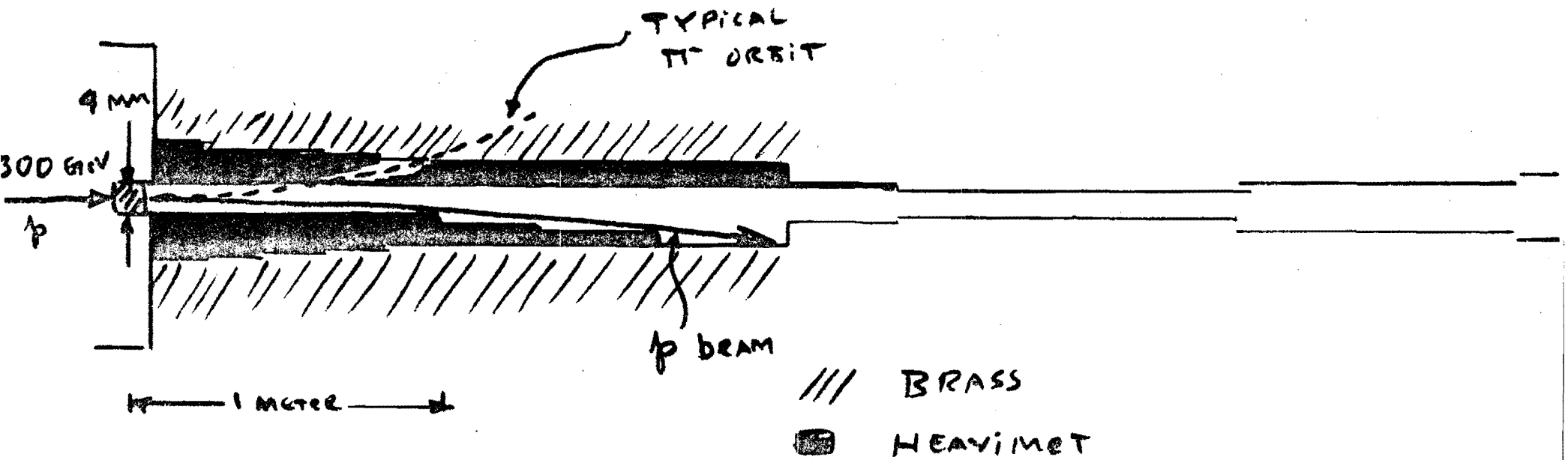
COLLIMATOR SLEEVE