PROPOSAL TO SEARCH FOR HIGH MASS PARTICLES PRODUCED IN ASSOCIATION WITH PROMPT MUONS

E. Bleser

Fermi National Accelerator Laboratory
Batavia, Illinois 60510

B. Gobbi, L. Kenah, J. Keren, R. Lipton, D. Miller,
J. Rosen, R. Ruchti, and D. Spelbring

Northwestern University
Evanston, Illinois 60201

J. Biel, D. Chaney, T. Ferbel, P. Slattery,
and D. Underwood

University of Rochester
Rochester, New York 14627

and

D. Freytag

Stanford Linear Accelerator Center
Stanford, California 94305

May 16, 1975

Correspondent: J. L. Rosen
Department of Physics
Northwestern University
312-492-5457

PROPOSAL TO SEARCH FOR HIGH MASS PARTICLES PRODUCED IN ASSOCIATION WITH PROMPT MUONS

SUMMARY

We propose to investigate the possible existence of narrow high mass states (e.g. charm particles) which are made in association with prompt muons. Most estimates of the expected magnitude of prompt muon production, which are based on electromagnetic processes or postulated intermediate states involving the known vector mesons, fail to saturate the observed μ/π ratio of $\sim 10^{-4}$. This suggests that a significant fraction of these muons could result from weak decays of heretofore undiscovered particles which are forbidden to decay strongly by a new conservation law. Such particles would of necessity be produced in pairs, and we propose to employ the muon resulting from the leptonic, or semi-leptonic, decay of one state to trigger our system, and then to examine the characteristics of the associatively produced particles using a modified version of our E27/E305 spectrometer.

The muons are to be identifed by their traversal of a steel and heavimet telescope which will be instrumented with counters, proportional chambers, and wire spark chambers. The addition of this second spectrometer arm will permit us to exploit the proven capabilities of our wide aperture, high resolution, forward spectrometer to study the multiplicity, transverse momentum, and invariant mass distributions of events produced in association with prompt muons. In addition, our ability to identify forward leptons will enable us to investigate $\mu\mu$ and μe correlations in these events.

This proposal is a natural outgrowth of the experience which we have gained during our previous search for charm-type particles (revised Experiment 305), and will be a particularly sensitive probe into this obviously important and still relatively unexplored physical domain. We request a total of 1000 hours of beam time for these studies.

I. INTRODUCTION

We shall assume that the physics motivation for pursuing the as yet undiscovered charm particles requires little discussion on our part. There has recently been extensive theoretical interest in the charm scheme[1] engendered in part by the observation of neutral currents and the hypothesized charmonium interpretation of the new ψ/J particles.

We have already completed an initial experimental search as part of Experiment 305. (See attached preprint - Appendix A.) It is on the basis of this first-hand experience that we now propose to undertake a more powerful second effort.

We hope to explicitly observe a hadronic weak decay channel of a particular charm particle state. It seems reasonable to conclude that the question of the existence of charm particles will not be fully settled until a definite mass peak is observed. In our first experiment, we examined with good resolution ($\delta M/M \lesssim 1\%$), the high mass dihadron system for possible narrow structure. We were particularly interested in investigating the $K^{\pm}\pi^{\mp}$ system since this was reputed to be a favored two-body decay channel of the hypothesized D° ($\bar{D}^{\circ}$) particle.

One limitation of our first search was the absence of explicit particle identification. As we pointed out in the proposal[2], this would not be a problem once a definite mass peak was observed since the kinematics of the decay of a particle of negligible intrinsic line width is such that the correct mass assignments are those which yield the narrowest experimental line width. The mass dispersion introduced by incorrect mass assignments is readily detectable (this point is developed more fully in Appendix B). Nevertheless, it is clear that without final state particle identification any mass peak would have to be recovered from a considerable background. The design of a suitably segmented Cerenkov system which is capable of discriminating particles in final states of high multiplicity is a challenging problem.

Consequently, we are proposing to implement a quite different scheme which promises to reduce non-charm particle background events at least as effectively as particle identification by Cerenkov methods. In so doing we will retain the advantages of a large aperture system (e.g. sampling a large range of dynamical variables such as t and x, accommodation of more than 2 particle final states, etc.) vis a´vis a small aperture two-arm spectrometer, for which the aforementioned technical difficulties with regard to Cerenkov counter construction are more tractable.

We intend to add to our existing spectrometer a second, muon-defining, arm which will permit the existing system to be triggered on events produced in association with a prompt muon. The basic ideas underlying the scheme are based on the following known facts or generally accepted hypotheses. In order to conserve the charm quantum number, charm particles are produced in pairs,as in the associated production of strange particles. Charm states can decay into a large variety of final states, including hadronic, leptonic, and semi-leptonic modes. It is conjectured that $\sim$ 10% of the decay of a charm state will be via semi-leptonic modes.[3] Consequently, we propose to use the muon-defining arm to identify the muon coming from a leptonic or semi-leptonic decay of one charm particle, and then to use the present spectrometer to analyze the decay of the associated charm state.

Note that we will be in a position to study doubly-charged dihadron systems as well. Since the conventional charm phenomenology is only one of several possibilities, one could envision a scheme whereby D mesons can occur only in the charged states D^{++}, D^{+} and $\bar{D}^{-}$, $\bar{D}^{--}$, which correspond to a shift in the charmed quark charge assignment.[4] All such states are within the capabilities of our apparatus.

Assuming that the field of study of charm physics ultimately materializes, the associated charm-production detector scheme proposed should prove to be more flexible than a two-arm spectrometer system. There should be a $\Delta C = \Delta Q$ rule ($C \equiv$ charm quantum number) in analogy with the $\Delta S = \Delta Q$ rule for strange particle decays. As a consequence, a $K^{+}\pi^{-}$ charmed particle decay (e.g. $\bar{D}°$) should be detected in coincidence with a prompt μ^{+}, but not a μ^{-}; the reverse should be true for $K^{-}\pi^{+}$ (e.g. D°) decays. We will search for such correlations in our proposed experiment.

Clearly the hadronic final states produced in association with prompt muons are interesting whether charmed particles exist or not, and our apparatus will provide a comprehensive measurement of the distributions of such particles. In addition we will be sensitive to processes in which any combination of hadrons and/or leptons ($\mu^{\pm}$, $e^{\pm}$) are produced in association with a prompt μ. For example, one central question concerns the relative roles played by electromagnetic and weak decays in prompt lepton production. While the former should produce only ee and $\mu\mu$ combinations, the latter should yield μe combinations in the ratio $\mu e/(\mu\mu + ee) = \frac{1}{2}$, as predicted by μ-e universality. As will be discussed in Section II, our existing spectrometer has μ and e identification capabilities which are adequate to investigate this very interesting area of inquiry.

Our goal will be to bring into early operation an effective trigger for the identification of a muon which is directly produced in a neutron interaction. We will then trigger our forward spectrometer upon the occurrence of such events and study correlations with other leptons, overall multiplicities, $P_{\perp}$ distributions, and the effective mass spectra of the associatively produced particles.

II. APPARATUS

The layout of the apparatus, in both plan and elevation views, is presented in Fig. 1. The main components are: the beam, a thin target, a vertex hodoscope for precise measurement of the production point, a high resolution forward spectrometer with reasonably large acceptance for high mass multibody final states, and an upward spectrometer arm for the identification and analysis of final state muons produced at relatively large angles to the beam. The principal features of these elements may be summarized as follows:

Neutral Beam

The present beam is a very well defined pencil beam whose intensity is controlled by inserting various pin hole collimators at a location 600' downstream from the primary target. We normally operate with 10^6 neutrons per pulse in a spot 6 mm in diameter at our target.

The principal modification in the beam line will be to change the defining collimator from a pinhole to a variable sized slot. Thus, the beam on our target, instead of being a circle, will be rectangular, typically 10 mm wide by 3 mm high. This new beam shape has two advantages: i.) it is matched to the vertex hodoscope discussed below which measures the horizontal position of the neutron interaction point in the target; and ii.) it minimizes the average flight path of a particle between its production point and its entry into the heavimet hadron absorber of the muon detector discussed below. This new collimator will be designed to provide remote control of the beam intensity.

Vertex Hodoscope

This counter array is designed to measure to $\lesssim$ 0.4 mm accuracy, the interaction point of the incident neutron in the target. Coupled with the track information recorded in each of the spectrometer arms, it will permit precise determination of final state particle momenta independent of multiplicity.

The hodoscope (see Fig. 2) consists of 24 vertical scintillator strips, each 1/32" horizontally x 5/8" vertically x 1/4" in thickness, placed side by side and located immediately downstream of the target (1/10 interaction length of Beryllium). Each counter is viewed by a 56 AVP photomultiplier with pulse height information provided by an 8-bit ADC.

The horizontal coordinate of the interaction vertex will be determined by forming the moment distribution of pulse heights from the individual counters of the hodoscope. To assess the accuracy we could expect for the given hodoscope arrangement, we have compared our geometry with the known distribution of particles from Fermilab bubble chamber data. We conclude that the horizontal coordinate can be determined to within the required 0.4 mm.

Forward Spectrometer

The forward spectrometer provides the momentum analysis of final states. It incorporates both large acceptance ($\sim$ 30% for masses of $\sim$ 3 GeV) and high resolution ($\delta p/p \sim 1\%$). Initially the equipment will consist mainly of elements used in E27/E305, supplemented by proportional wire chambers (PWC) upstream of the BM109 analyzing magnet. However, a major effort is now underway to replace the existing downstream spark chambers with a combination of proportional wire chambers and drift chambers. As this new equipment becomes available, it will replace that presently installed.

The spectrometer acceptance is defined by the target-to-magnet distance and the magnet aperture (± 60 mrad horizontally and ± 20 mrad vertically). Particles are detected using two trigger hodoscopes, H1 and H2, which were employed in E27/E305. H1 consists of 6 elements and covers the BM109 exit window (24" horizontally x 8" vertically). H2 is placed 15 m downstream of the magnet and consists of 16 elements covering an area 72" horizontally x 32" vertically.

The interaction point of the neutron in the target will be provided by the aforementioned vertex hodoscope. Direction cosines of charged particles upstream of the magnet will be determined by proportional chambers PWC1, PWC2 (both shared by the muon arm), and PWC5 which covers the BM109 aperture. Downstream of the magnet, spatial information will be provided by a new magnetostrictively-readout wire spark chamber consisting of 8 gaps (X, X, U, Y, V, Y, X, X) immediately behind the H1 hodoscope. The active area of this chamber (34" horizontally x 11" vertically) is designed to match the magnet aperture, and will therefore not register low momentum tracks which are bent at large angles

by the field. The rest of the downstream end of the spectrometer will remain as it was for E27/E305. It consists of 4 gaps of wire spark chambers with magnetostrictive readout and covers an active area 96" horizontally x 48" vertically. Behind this are a 40-element shower detector used to identify electrons and photons and a 10' thick iron hadron absorber backed by a 12 counter, liquid scintillator muon hodoscope. Both of these elements were used in the January, 1975 run of E305, and details of the calibration and resolution of the electron detector are presented in Appendix C. We also plan to increase the power of our electron and photon detection by ultimately replacing our present shower detector with a system of higher spatial resolution. At present the shower counter is an effective electron detector, but is less efficient in detecting π°s -- a consequence of the coarse segmentation of the device into vertical strips only. We envisage constructing a detector along the lines of the present Cal Tech system consisting of two banks, each with a sensitive area of 32 x 32 in^2. It will be composed of 64 horizontal and 64 vertical elements, incorporate 256 photomultipliers, and shadow most of the useful aperture of the forward spectrometer. With the addition of this device we will be able to extend our hadron spectroscopy to systems such as $h^\pm\pi^\circ$ and $h_1^\pm h_2^\pm\pi^\circ$.

The Muon Spectrometer

Directly produced muons will be identified and analyzed via a spectrometer having an angular acceptance encompassing a vertical angular range of $30 \leq \theta \leq 100$ mrad above the horizontal plane and a horizontal angular range of ± 115 mrad. Hadrons entering this solid angle will be filtered out via an absorber consisting of 20" heavimet, 72" steel, 80" magnetized iron (the return yoke of the BM109 magnet), followed by 6" more of steel (see Fig. 1). The ionization loss for a charged particle traversing this much material is $\sim$ 6 GeV.

The presence of a particle in the muon arm will be detected by three scintillation counter hodoscopes (M1-M3 in Fig. 1). The first of these is upstream of the BM109 magnet and consists of 8 elements, each 2.5" horizontally x 8" vertically. The second and third are downstream of the BM109 and contain, respectively, 4 elements, each 14" horizontally x 16" vertically, and 6 elements, each 14" horizontally x 20" vertically. The pulse heights from each of these counters will be digitized using 8-bit ADC's. A possible triggering scheme

for a muon candidate would be one and only one minimum ionizing particle in each of the three hodoscopes.

The direction of the muons upstream of the BM109 magnet will be determined by the vertex hodoscope plus 4 sets of PWC's (see Fig. 1). Two units of 5" x 5" active area will be placed between the heavimet and steel absorbers. These chambers will have XY readout and .75 mm effective wire spacing. The remaining two units of 28" x 7.5" active area will be placed within 12" of the upstream face of the BM109. These will have UV readout (± 15° with respect to the vertical), and 2 mm wire spacing. The wires will be read-out in groups of 8. The direction of the muon downstream of the magnet will be determined by 8 gaps of wire spark chambers with magnetostrictive readout. These chambers have an active area of 36" x 60", and were previously used during E27/E305.

The momentum of the muon will be measured using the digitized coordinates before and after the magnet, plus the field in the BM109 yoke. The accuracy of this determination will be limited by multiple coulomb scattering. For particles of momentum > 12 GeV/c, we expect to be able to determine P to within 25%; particles of lower momentum will not satisfy the trigger requirements. A further discrimination against hadron contamination will be achieved through requiring the muon candidates to extrapolate back to the production vertex. Initially, this requirement will be imposed off-line, but ultimately we expect to be able to build this requirement (partially) into the trigger. Such a trigger would consist of a coincidence between an element of PWC3 and an OR of three elements of PWC4 suitably chosen to favor particles coming from the target. The OR of elements in PWC4 will be provided by a diode matrix, and the coincidence between appropriate elements of PWC3 and PWC4 will be accomplished using MCL3 logic.

The effectiveness of this spectrometer in eliminating hadrons depends sensitively on the momenta of the hadrons which enter its upstream end. The appropriate momentum spectrum can be ascertained using bubble chamber data, and is shown in Fig. 3a. This data, plus the experimental trigger rates which are obtained when successive portions of the hadron absorber are removed, will be used to assess the contamination of the muon signal by hadron decays.

III. TRIGGER RATES AND YIELDS

The basic trigger scheme which we envision (see Fig. 1) involves a prompt $\mu^{\pm}$ signal, and at least one detected charged particle in both the left (H1L, H2L) and the right (H1R, H2R) halves of the spectrometer. The charges of the particles in the spectrometer need not be of opposite sign.

Our estimates of trigger rates and background are based on the geometrical acceptance described in the previous section and on studies of 102 GeV/c and 400 GeV/c p-p data obtained from bubble chamber exposures at Fermilab. We have assumed that the average of the results at the two energies will serve as a useful guide to backgrounds we might expect for similar geometrical configurations in n-Be collisions in the M-3 beam (typical momenta $\sim$ 230 GeV/c).

Figure 3(a) displays the expected momentum spectrum of all particles emitted into the range of angular acceptance defined by the muon spectrometer. (The distribution is based on an average of the measured 102 GeV/c and 400 GeV/c inelastic pp data in the same region of geometrical acceptance.) The threshold for the momentum acceptance in this arm of the detector is $\sim$ 12 GeV/c, and is determined by the energy lost in the hadronic shield and by the bending in the magnetized iron. As shown in the figure, the inclusive cross section for the emission of a hadron of momentum greater than 12 GeV/c into the muon channel is 1.3 mb; the average momentum of such particles is 16 GeV/c. (This cross section is consistent with the work of Cronin, et al at Fermilab.) We now assume that n-Be reactions will display similar behavior. Assuming 10^5 interactions per spill, we estimate $10^5 \times 1.3$ mb/33 mb $\simeq$ 4,000 particles per spill (mostly pions) traversing the muon arm of the spectrometer. (The 33 mb in the denominator corresponds to the total inelastic pp cross section.) If μ production can be taken to be 10^{-4} of π production in our range of kinematics, then we expect $\sim$ .4 prompt muons/beam spill.

A lower limit for the background to direct muon production can be obtained from an estimate of the number of pions and kaons which decay into muons within the angular acceptance of the muon arm of the spectrometer. This corresponds to a decay rate of $\sim 1.7 \times 10^{-4}$ for 16 GeV/c pions. Approximately one-third of the muons from these pion decays will have sufficient momentum to trigger the event and thus we expect a rate of 4000 $\pi^{\pm} \times 6 \times 10^{-5}$, or 0.25 muons per spill due to decaying pions. (A comparable number of muons are expected from $K^{\pm}$ decays.) This indicates that after making use of the PWC and spark chamber information, the data can be filtered to achieve a ratio for the signal-

to-noise level of roughly 1 to 1. We do not assume that we can do this well in our trigger. However, we hope to approach this level of suppression in analysis. For the following estimates of background rates we will assume that sources such as beam halo, accidental rescattering of pions, etc., will dominate the trigger and make it at most a factor of ten times less efficient than that indicated above. Our past experience with muon filters gained during the execution of Experiment #305 leads us to believe that a hadron suppression factor of $\lesssim 2 \times 10^{-3}$ in triggering should not be difficult to achieve using the envisioned M1, M2, M3 muon telescope. Consequently, with this assumption, a total of 10^5 interactions per spill will yield approximately 8 background triggers in the muon-telescope arm of the spectrometer, along with an average of 0.4 directly produced muons.

Combining the muon-arm trigger with the additional requirement of having a left/right signal in the vee spectrometer, provides an $\sim$ 50% dimunition in the overall hadron production cross section. We will assume that the reduction factor in the direct muon yield is the same as for the background triggers.

From pp bubble chamber data we expect a mean charge multiplicity of $\sim$ 9 for the trigger events; however, only 3-4 of the charged tracks in an event will typically reach the spark chambers downstream of the BM109 magnet. Consequently, we expect clean separation of trajectories and no great difficulty with reconstruction or with multi-track efficiency.

Our spark chambers have dead times of 30 msec, so that the trigger rates of $\sim$ 4 per spill appear to be well matched to the data acquisition capability of our equipment. In fact, if the background levels permit, we will increase the beam intensity by perhaps a factor of three and obtain a yield of $\sim$ 0.6 direct muons per spill.

Figure 3b displays the dihadron effective mass spectrum obtained from bubble chamber data under our specific trigger conditions. (All the hadrons which satisfy the left/right requirement, and are associated with an additional hadron satisfying the muon-arm trigger, have been assigned K and π mass values.) The mass distribution is observed to peak at very small invariant mass, with 90% of the two-body combinations having mass values < 1.8 GeV. Thus, as far as a search for two-body charm-particle decays which accompany the μ is concerned, the effective background will be comparable to the yield from prompt μ triggers.

To assess the sensitivity of the proposed experiment and the yields of interesting events which we expect to obtain, we will assume that only one half of all the real triggers which involve direct μ production are connected with the production of normal vector mesons (i.e., ρ, ϕ, or ω). Thus in 10^6 triggers we suppose 40,000 interesting μ events which may be the result of Ψ, or charm production, or the like. If objects such as the $\overline{D^0}$ or D^- are produced in $\gtrsim$ 20% of the associated charm-pair events (where one of the associated objects decayed into the detected μ), and if $\sim$ 20% of the time these D mesons decay either into $K^+\pi^-$ or $K^+\pi^-\pi^-$ states, then we expect to observe $\sim$ 200 event signals per 40-MeV bin, in the two-body and three-body mass distributions at $\sim$ 2 GeV, over background levels of $\lesssim$ 600 events/40 MeV. (This includes corrections for the 50% acceptance of the spectrometer.) Consequently, if the above decay rates are realized, we will observe significant peaks in four independent mass spectra at a unique mass value. In addition, the D events should be associated with μ^- triggers while $\overline{D}$ events should accompany μ^+ triggers.

Some of the most interesting results from this experiment will be derived from a study of the nature of the leptons which accompany the $\mu^\pm$ triggers. The charge of the trigger μ will be determined from its trajectory through the magnet iron. If we assume that any leptons associated with the μ trigger are from leptonic or semi-leptonic decays of charm particles, then we expect 1000 μ and 1000 e to register in our downstream μ and e detectors in coincidence with the direct μ triggers.

The background to these $\mu\mu$ and μe coincidences can be estimated using the data we have recorded with our downstream μ-filter and e-detector in Experiment #305. Figure 4 indicates the fraction of time a hadron (mostly π) simulates a muon or an electron. Integrated over momentum, the hadron rejection capability for μ and e triggering is 7×10^{-3} and 5×10^{-3} respectively. Thus, for 10^6 triggers, of which $\sim 1.5 \times 10^5$ will be indistinguishable from prompt muons, we expect $\sim$ 2000 $\mu\mu$ and $\sim$ 1500 μe accidental coincidences. Consequently, it appears that correlations in production between the upstream μ and the downstream μ or e can be ascertained with excellent precision in an experiment consisting of 10^6 triggers. Table I summarizes the expected yields.

In the above discussion, we have assumed that the interesting signal-to-noise ratio for prompt μ triggers is 1/20. We believe this to be a conservative estimate. Also, in our discussion, we have not stressed that truly unusual phenomena may distinguish the real μ associated events from the fake ones (for example, the transverse momentum spectra of the events accompanying prompt μ triggers, etc.). Our large aperture spectrometer is particularly well suited for studying many facets of the physics which cannot be foreseen in this exploratory investigation of particle production in association with muons.

As indicated above, we envision a run consisting of $\sim 10^6$ triggers produced by muons, with the additional requirement of having two or more particles entering the vee spectrometer. In order to systematically study and minimize the background in such a triggering scheme, to optimize the trigger, and collect the data, we will need 1000 hours of running time.

SCHEDULE FOR 1975

June Shutdown	-	Install steel for muon detector.
	-	Install counters for muon detector.

The muon detector is not in the beam line and does not disturb normal operation of the beam.

July	-	Parasitic tune up of muon detector.
August	-	4 weeks prime beam time for tune up of both spectrometers and preliminary data taking.
November, December	-	4 weeks prime beam time for data taking.

SCHEDULE FOR 1976

Two four-week running periods.

COST OF THE APPARATUS

Below is a list of additional equipment to be incorporated into the existing E305 set up, in order to carry out the proposed experiment.

a) Requested from Fermilab:

PREP Request (see attached list)	15,706.00
Hadron Shielding and Support, for Muon Spectrometer (6000 lb, iron)	2,500.00
Beam Defining Collimator (Detailed drawings have already been made under the agreement for E305, as part of the polarized beam experiment, which has been dropped in order to carry out the charm particle search)	10,000.00
	$ 28,206.00

b) Supplied by Experimenters:

Vertex Defining Hodoscope (24 scintillation counter system, photomultipliers previously used in hydrogen gas target)	7,300.00
M1, M2 and M3 Hodoscopes for Muon Spectrometer (18 scintillation counters)	12,530.00
Proportional Chambers PWC's - 5	41,710.00
CAMAC Interface for PWC	11,270.00
Decision Logic for PWC3, 4	4,730.00
PWC Gas System	1,250.00
PWC HV Power Supply	1,750.00
Pulsed Clearing Field for Spark Chambers	2,500.00
New 8-Gap Wire Spark Chamber	8,500.00
	$ 91,540.00

PREP REQUEST

		$ each	
5	NIM Crates, Powered (± 6V)	600.00	3,000.00
6	Quad Discriminators, 621	695.00	4,170.00
2	Dual 4-Fold Maj. Logic, 635	695.00	1,390.00
2	Dual 4-Fold Programmable Maj. Logic, 635 ALP	628.00	1,256.00
2	CAMAC Units for 635 ALP	500.00	1,000.00
6	Fan-in/Fan-out, 428	395.00	2,370.00
2	Dual Gate Generator, 222	695.00	1,390.00
2	Dual Delay Units with Remote Control	400.00	800.00
3	NIM Cooling Fan M127/N	110.00	330.00
			$15,706.00

REFERENCES

1. M. K. Gaillard, B. W. Lee, and J. L. Rosner, Rev. Mod. Phys. 47, 277 (1975).
2. Proposal for the continuation of Experiment 305, Search for Massive Long-Lived Particles Produced by Neutron Dissociation, E. J. Bleser, et al, (December 6, 1974).
3. M. B. Einhorn and C. Quigg, Fermilab-Pub-75/21-THY (February, 1975); and reference 1.
4. E. Takasugi and S. Oneda, Phys. Rev. Lett. 34, 988 (1975); E. Takasugi and S. Oneda, Phys. Rev. Lett. 34, 1205 (1975); and B. S. Mathur and B. W. Lee, private communication.

TABLE I

YIELDS EXPECTED FOR 1000 HOURS OF BEAM

FINAL STATE	SIGNAL †	BACKGROUND †
$\mu^{\pm}\mu^{\mp}$	$\sim 10^4$ ‡	10^3*
$\mu^{\pm}e^{\mp}$	10^3	750 *
μ^+ + associated $K^+\pi^-$ state	200/40 MeV	600/40 MeV
μ^+ + associated $K^+\pi^+\pi^-$ state	100/40 MeV	300/40 MeV
μ^- + associated $K^-\pi^+$ state	200/40 MeV	600/40 MeV
μ^+ + associated $K^-\pi^+\pi^-$ state	100/40 MeV	300/40 MeV

† Rates have been corrected for acceptance.

* Approximately the same number of "wrong" charge pairs ($\ell^{\pm}\ell^{\pm}$) are expected.

‡ If the trigger is not restricted to one and only one particle in the muon arm, then electromagnetically produced dimuon pairs of low mass are expected to exceed charm-associated μ pairs by more than an order of magnitude. At large masses the yields may be comparable.

FIGURE CAPTIONS

Figure 1. Schematic of the experimental apparatus: (a) side view, (b) top view.

Figure 2. (a) The upstream face of the vertex hodoscope, showing the position of the scintillators and several light guides and tubes. The active area of scintillator is 3/4" wide x 3/4" high.
(b) A perspective drawing showing the spatial extent of the collimated beam, 1/10 interaction length Be target, and active area of the vertex hodoscope.

Figure 3. Results from 102 and 400 GeV/c Fermilab bubble chamber data on p-p collisions specialized to the proposed geometry of the muon arm: (a) the momentum distribution for single hadron inclusive production into the angular range $30 < \theta < 100$ mr vertical by $\pm$ 115 mr horizontal;
(b) the invariant mass distribution for the two particles detected by the forward spectrometer for the assumption that one is a pion and one a kaon.

Figure 4. Experimentally observed hadron rejection ratios as a function of incident hadron momentum for (a) the muon detector, (b) the electron shower detector. The ratios represent the fraction of the time the incident hadron (π) decays into or penetrates as a muon or electron.

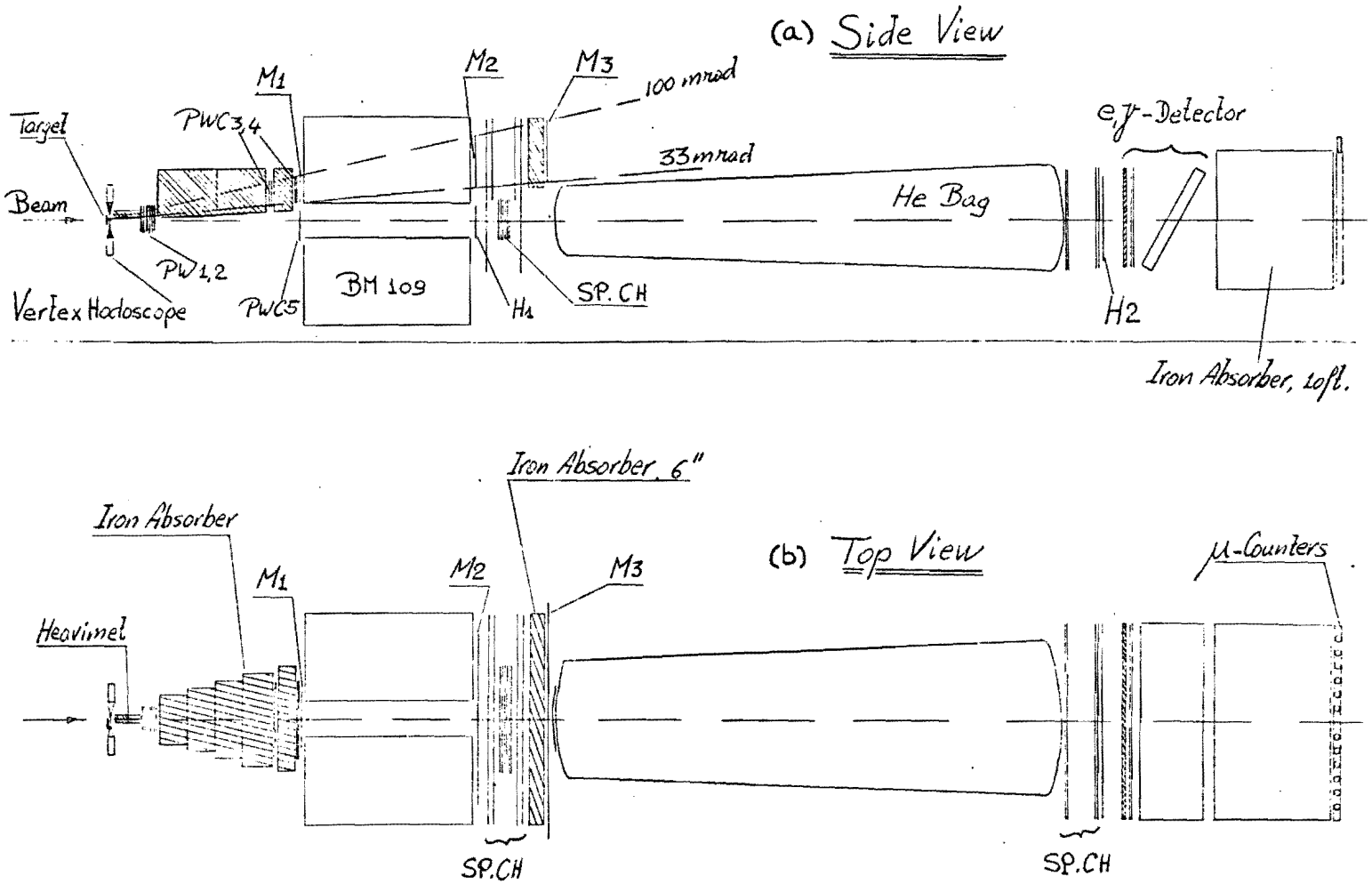
(a) Side View
Target
Beam
PWC3,4
M1
M2
M3
100 mrad
33 mrad
e,γ-Detector
He Bag
PW1,2
Vertex Hodoscope
PWC5
BM 109
H1
SP. CH
H2
Iron Absorber, 10ft.
Iron Absorber, 6"
Iron Absorber
Heavimet
M1
M2
M3
(b) Top View
μ-Counters
SP.CH
SP.CH

FIGURE 1

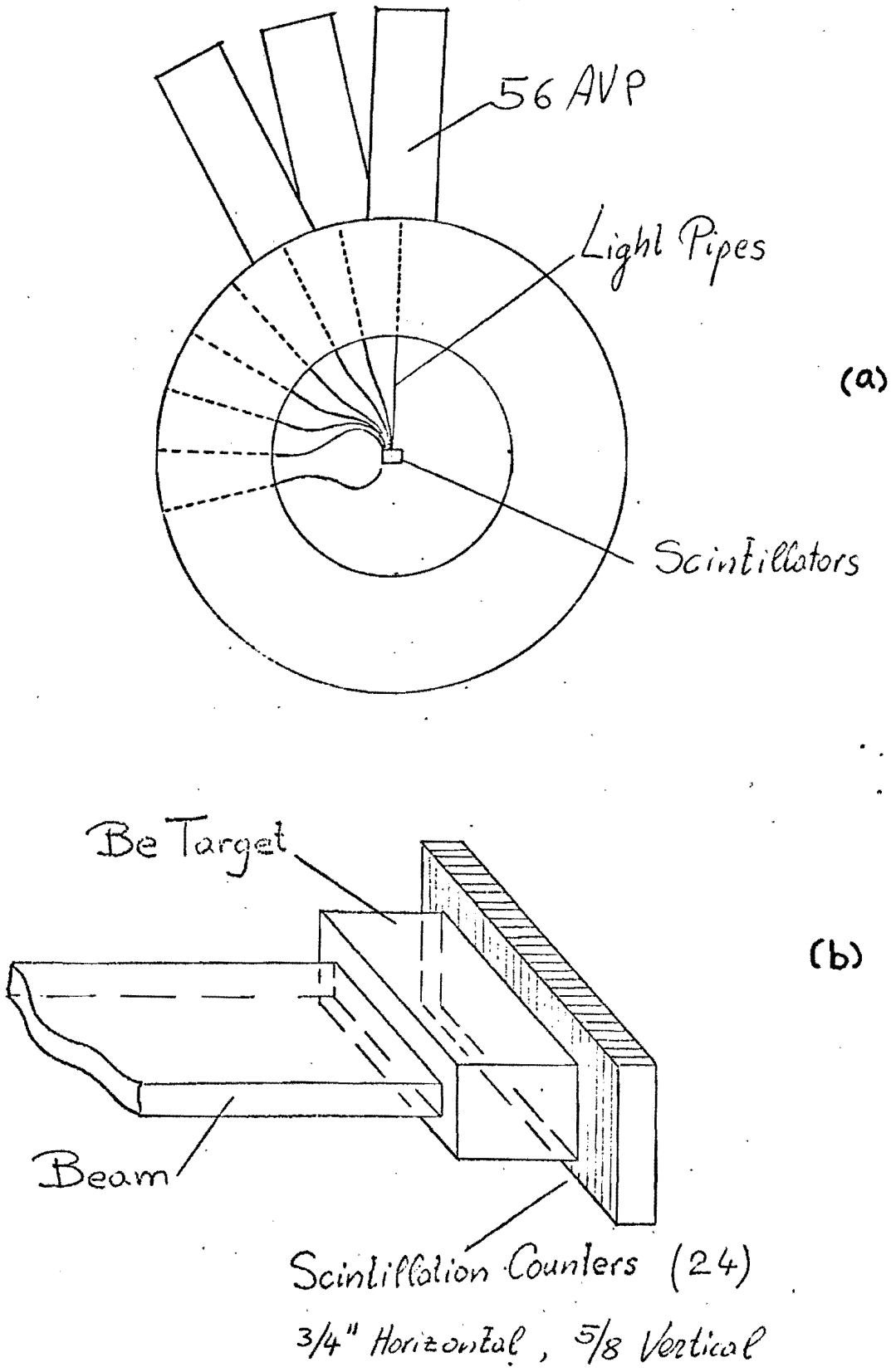
56 AVP
Light Pipes
(a)
Scintillators
Be Target
(b)
Beam
Scintillation Counters (24)
3/4" Horizontal, 5/8 Vertical

FIGURE 2

102 and 400 GeV/c Bubble Chamber Data

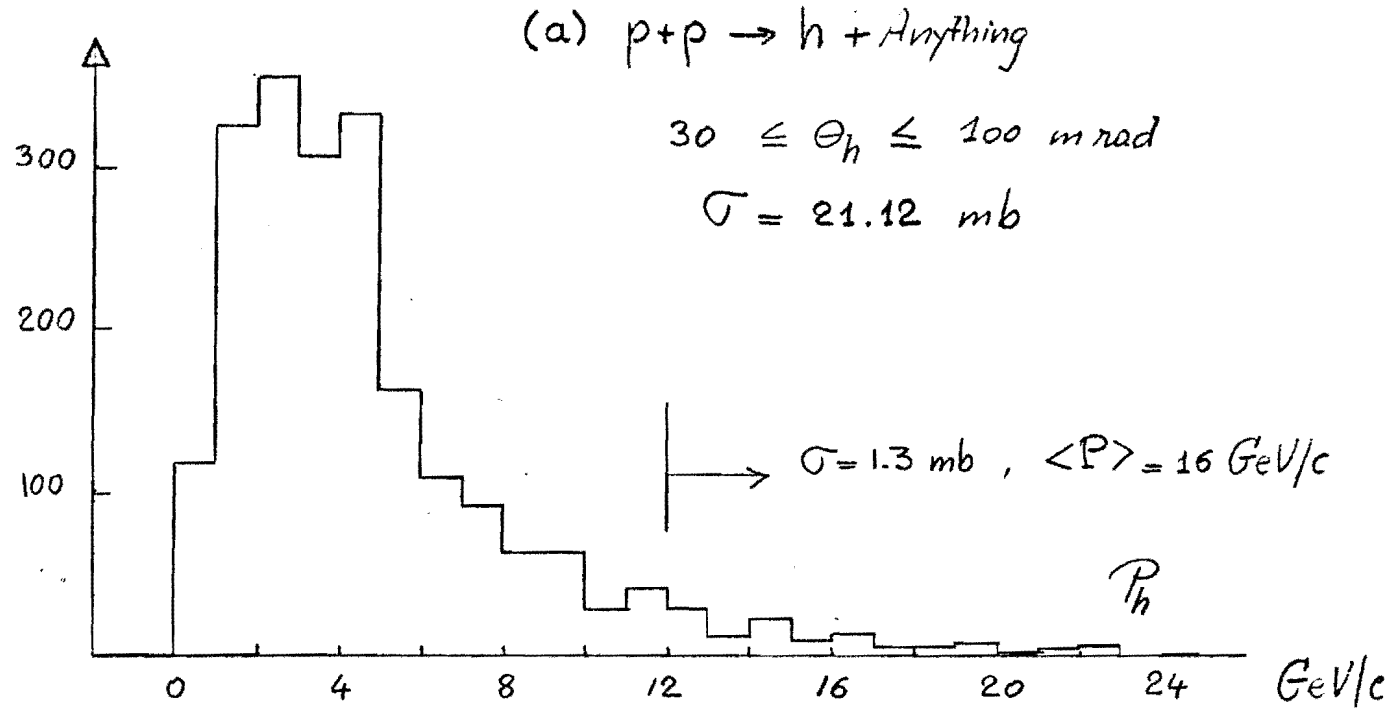

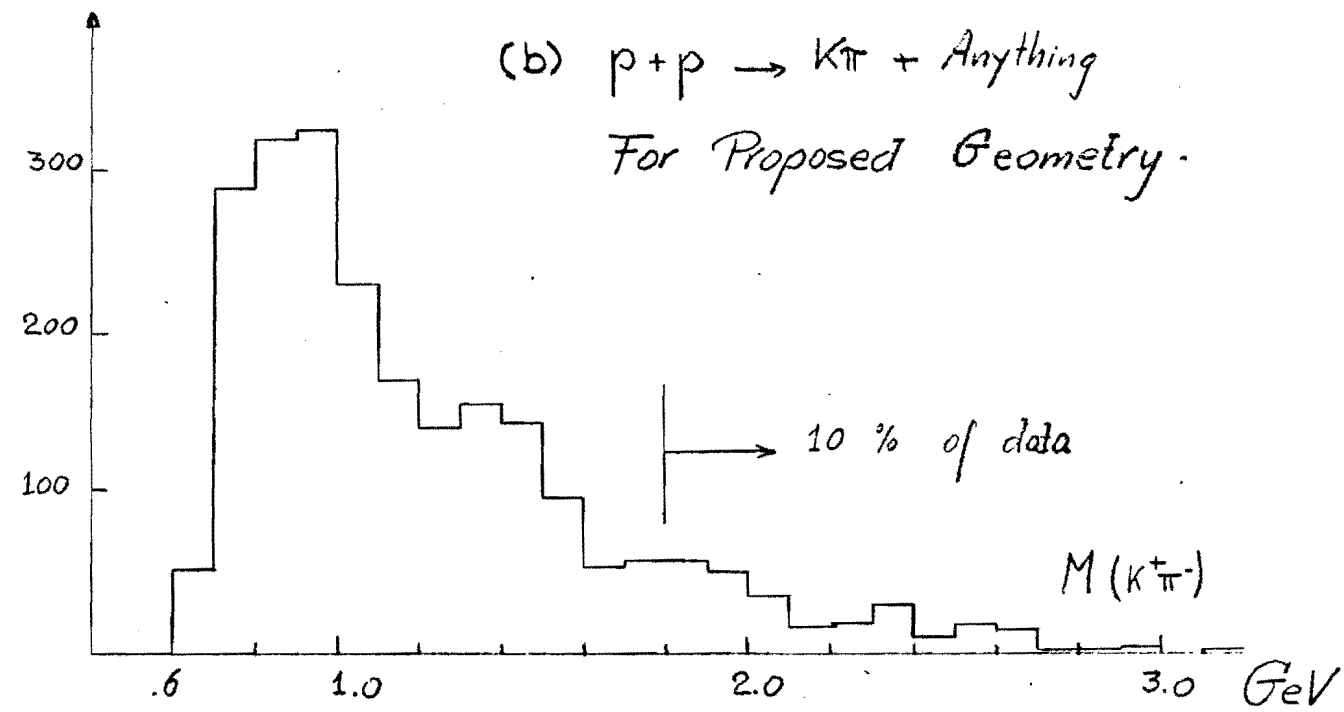

FIGURE 3

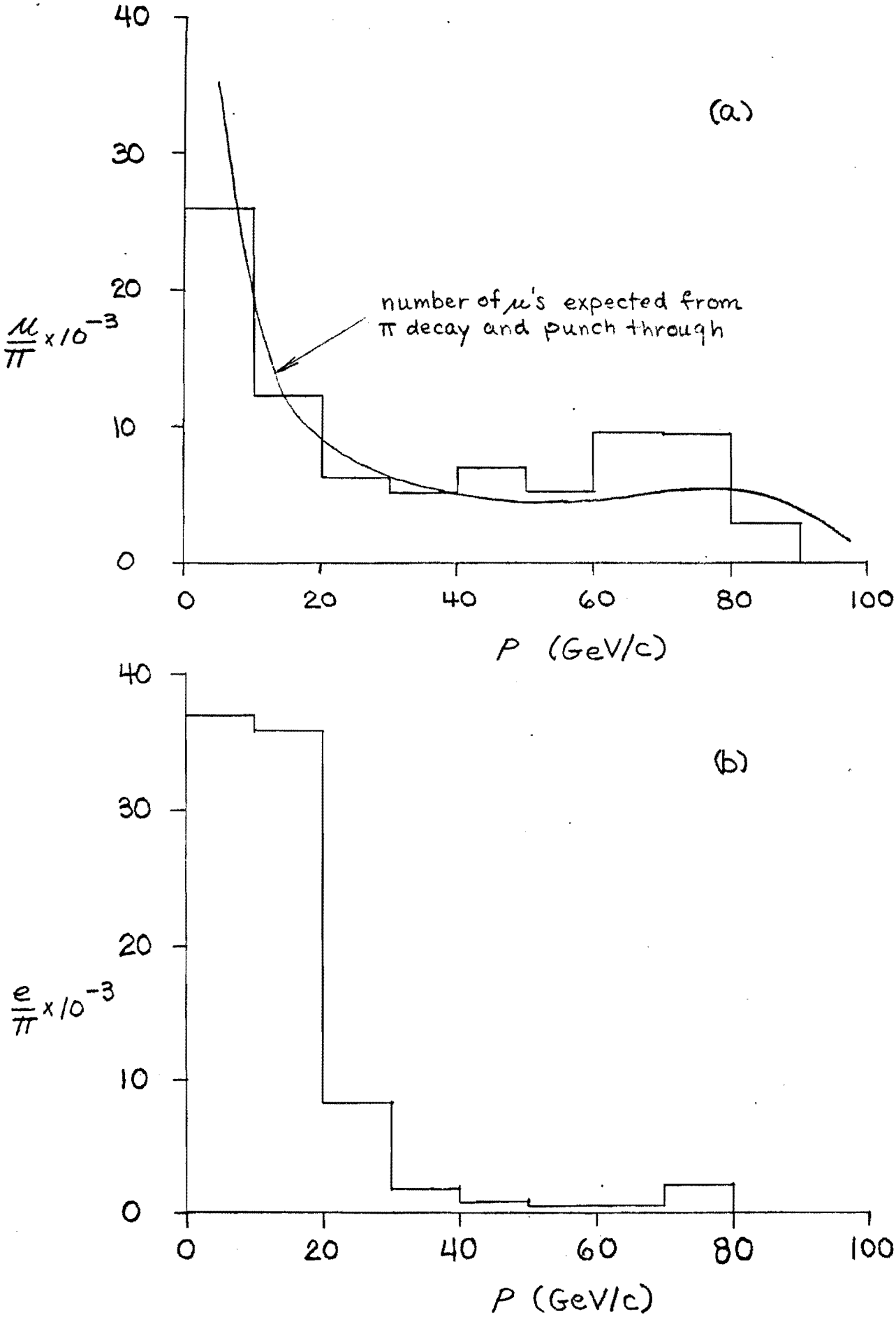
(a)
number of μ's expected from
π decay and punch through
μ/π x10^-3
P (GeV/c)
(b)
e/π x10^-3
P (GeV/c)

FIGURE 4

Fermi National Accelerator Laboratory

FERMILAB-Pub-75/32-EXP
7100.305
UR-528
(Submitted to Phys. Rev. Letters)

APPENDIX A

SEARCH FOR NARROW RESONANCES PRODUCED BY NEUTRON DISSOCIATION

E. J. Bleser
Fermi National Accelerator Laboratory, Batavia, Illinois 60510

B. Gobbi, L. Kenah, J. Keren, J. Rosen,
R. Ruchti, H. Scott, and D. Spelbring
Northwestern University, Evanston, Illinois 60201

J. Biel, C. Bromberg, T. Ferbel, P. Slattery, and D. Underwood
University of Rochester, Rochester, New York 14627

and

D. Freytag
Stanford Linear Accelerator Center, Stanford, California 94305

April 1975

Operated by Universities Research Association Inc. under contract with the Energy Research and Development Administration

Search for Narrow Resonances Produced by Neutron Dissociation*

E. J. Bleser

Fermi National Accelerator Laboratory
Batavia, Illinois 60510

B. Gobbi, L. Kenah, J. Keren, J. Rosen, R. Ruchti, H. Scott, and D. Spelbring

Northwestern University
Evanston, Illinois 60201

J. Biel, C. Bromberg, T. Ferbel, P. Slattery, and D. Underwood

University of Rochester
Rochester, New York 14627

and

D. Freytag

Stanford Linear Accelerator Center
Stanford, California 94305

We present the results of a search for charged two-body decays of neutral high mass resonances produced via neutron dissociation. The experiment was executed with a vee spectrometer in the M-3 neutral beam at Fermilab; the incident neutrons had an average momentum of ~200 GeV/c. The detector was sensitive to final states with charged multiplicity ≤ 4, produced forward in the center of mass ($x > .3$). We find no significant enhancements in the high mass $K^+\pi^-$, $K^-\pi^+$ or pK^- systems. We estimate an upper limit for cross section times branching ratio of any narrow $K^+\pi^-$ state to be $\lesssim$ 50 nb/nucleon for masses between 2 and 3 GeV.

*Research supported in part by the U. S. Energy Research and Development Administration.

The known properties of the recently discovered J-particle [1] or ψ (3100), and of the $\psi(3700)$[2] suggest the existence of an additional selection rule which governs the interaction of elementary particles. A possible explanation for the unusually narrow decay widths of these particles is that they are bound states of two quarks having a quantum number called charm.[3] If such an hypothesis is correct, then it implies a new hadron spectrum with the lowest lying meson states characterized by unit charm quantum number, very narrow width, and masses greater than ~1.85 GeV.

In analogy with the diffraction-dissociation of neutrons into nucleon-pion or hyperon-kaon systems, one expects charmed particles to be associatively produced in reactions such as:

$$n + Be \rightarrow B^0_c + M^0_{\bar{c}} + \text{anything} \qquad (1)$$

$$n + Be \rightarrow n + M^0_c + M^0_{\bar{c}} + \text{anything} \qquad (2)$$

where M, B, and c refer to meson, baryon, and charm, respectively. Since the diffraction process involves large cross sections at high energy ($\sim$ 3 mb for $n \rightarrow N\pi$ + anything, and $\sim$ 200μb for $n \rightarrow KY$ + anything), it is a logical domain to search for charmed objects.

We report here a search for the charged two-body decays of neutral high mass particles produced by neutron dissociation. The experiment was performed at the Fermi National Accelerator Laboratory in the M3 neutral beam. Neutrons were produced at 1 mrad and had a maximum momentum of 300 GeV/c, with 200 GeV/c the average value. The photon component of the beam was suppressed by 15 radiation lengths of lead followed by sweeping magnets. The number of K^0_L mesons with momenta greater than 50 GeV/c was less than 1% of the total beam.[4] The neutron flux was continuously monitored by two systems of detectors: a hadron calorimeter consisting of 21 scintillation counters equally spaced within five interaction lengths of iron, which provided absolute normalization; and a relative monitor telescope, consisting of 3 scintillation counters and lucite converter,

which sampled 3/4% of the beam. Neutron fluxes were typically 2×10^6 neutrons per pulse. The "vee" spectrometer, shown in Figure 1, consisted of a BM109 analyzing magnet (which provided 1 GeV/c of transverse momentum), 20 gaps of wire spark chambers with magnetostrictive readout, and a variety of scintillation counters and hodoscopes for trigger requirements. The 2 cm Be target was surrounded by a system of scintillation counters and lead converters (A), except for openings for beam entrance and exit. Information from these counters was recorded during each trigger, and was used to study the coherence of reactions (1) and (2) in the off-line analysis.

The trigger consisted of a neutral particle interacting in the target (T), a positive signal in the S counter immediately downstream, and at least one (detected) particle in the left (HOL, H1L, H2L) and one in the right (HOR, H1R, H2R) halves of the spectrometer. The HOR, HOL, and $\overline{V1}$[5] counters imposed a minimum opening angle of 20 mrad on the vee, and consequently suppressed low mass, large x background (primarily neutron dissociation into nucleon-pion systems).[6] High multiplicity events produced at small x were eliminated by the $\overline{V2}$ counter and by pulse height cuts applied to the HOR and HOL signals, which limited the number of particles allowed in each counter to $\lesssim 2$.

The kinematic domain allowed by the trigger was for particles (vees) produced forward in the center-of-mass ($x \gtrsim .3$). The geometrical acceptance of the apparatus was defined by the limiting aperture of the BM109 magnet, less the solid angle subtended by the $\overline{V1}$ counter: $20 < |\theta| < 75$ mrad horizontally, $|\theta| < 25$ mrad vertically. This translates into an acceptance of 10% for an object of 3 GeV mass decaying into two bodies. The mass resolution for a 3 GeV $K\pi$ state was estimated to be ±20 MeV from Monte Carlo calculations based on spark resolution and spark chamber placement; this value is consistent with the observed width of detected $K^o_S \to \pi^+\pi^-$ decays. Data acquisition was handled by a PDP-15 computer which also monitored the on-line performance of the equipment.

Roughly one in 5×10^3 interactions satisfied the trigger requirement, and over a two-week running period 7.5×10^5 triggers were recorded. Two thirds of the events yielded more than two tracks in the spectrometer, the multiplicity being limited by the triggering requirements. Multiple track efficiency has been estimated by comparing the number of reconstructed tracks to the number of hodoscope counters latched, and was found to be ~ 80% for 6 tracks.

Events were analyzed via a pattern recognition and fitting program which searched for charged two-body configurations. Since the spectrometer provided no particle identification, the invariant mass of a given two-body combination was calculated using various mass assignments. Using the formula for the effective mass of a two-body system, it is straightforward to show that if a specific two-body mode contains a narrow resonance, then the corresponding mass peak will be the sharpest when the decay products are assigned their correct masses. Had a significant mass peak been observed, this property would have been used to identify the specific mode involved.

Assuming a $K^+\pi^-$ mass assignment, 1.5×10^4 events were obtained having invariant masses greater than 1.85 GeV. Figure 2 displays the $K^+\pi^-$, $K^-\pi^+$, and pK^- invariant mass distributions in bins of 20 MeV for accepted vees having a Q value $\gtrsim 0.8$ GeV. Each distribution was fitted with a fourth order polynomial in the mass variable. The deviation of the observed mass distribution from the smooth polynomial fit, in numbers of standard deviations, is shown underneath each mass distribution. No significant signal is observed. We also divided the data into coherent and incoherent samples using the latched information from the counters surrounding the target. The mass spectra were similar in both samples and revealed no significant enhancements.

An upper limit for the cross section (σ) times branching ratio (BR) for the production of a neutral high-mass particle and its subsequent decay into two hadrons has been calculated from the neutron flux, the number of target nucleons,

and the spectrometer acceptance. Making the assumption that a positive result would have been reported had we observed at least a four standard deviation effect in a mass interval whose size is given by four times the experimental resolution , we obtain Figure 3, which displays $\sigma \cdot BR$ as a function of invariant mass. A value of $\sigma \cdot BR$ greater than that shown would have resulted in a statistically significant signal. This curve includes a factor of 3 correction for the probability of vetoing a good charmed-vee event by having the associated charmed particle in reactions (1) or (2) strike one of the veto counters.[7] These upper limits are an order of magnitude smaller than previous theoretical estimates based on a $1/M^2$ dependence of the mass spectra for diffractive processes.[8]

We wish to thank R. Lipton and T. Jensen for their help during the running of the experiment, the technical personnel at the University of Rochester and at Northwestern University, in particular J. Hahn and T. Phillips, and Drs. P. Koehler and J. R. Sanford at Fermilab for their assistance and encouragement.

References

[1] J. J. Aubert, et al., Phys. Rev. Letters 33, 1404 (1974); J. E. Augustin, et al., Phys. Rev. Letters 33, 1406 (1974); C. Bacci, et al., Phys. Rev. Letters 33, 1408 (1974).

[2] G. S. Abrams, et al., Phys. Rev. Letters 33, 1433 (1974).

[3] S. L. Glashow, Experimental Meson Sepctroscopy, Boston (1974), D. Garelick ed.; M. K. Gaillard, B. W. Lee, and J. L. Rosner, Fermilab-Pub-74/86-THY, (August 1974); M. K. Gaillard, B. W. Lee, and J. L. Rosner, Fermilab-Pub-75/14-THY, (January 1975); A. De Rujula and S. L. Glashow, Phys. Rev. Letters 34, 46 (1975); S. Borchardt, V. S. Mathur, and S. Okubo, Phys. Rev. Letters 34, 38 (1975).

[4] M. J. Longo, et al., University of Michigan Report UM-HE-74-18 (1974).

[5] The bar above V1 indicates the counter is a veto counter.

[6] Here x is the Feynman variable $P_{\parallel}^{cm}/p_{max}^{cm}$.

[7] This correction assumes that one half of the decays of charmed objects will be into two or three bodies and that the decays will be isotropic.

[8] G. Snow, Nucl. Phys. B 55, 445 (1973) and references 3. It should also be pointed out that more recent theoretical estimates based on the charm model suggest that the branching ratio of charmed mesons into the $K\pi$ channel may be rather small. See M. B. Einhorn and C. Quigg, Fermilab-Pub-75/21-THY (February 1975).

Figure Captions

Fig. 1 Plan view of the experimental apparatus.

Fig. 2 Mass spectra for (a) $K^+\pi^-$, (b) $K^-\pi^+$, and (c) pK^- mass hypotheses in 20 MeV bins. The difference between the number of events in each bin and the number expected based on a fourth order polynomial fit to the overall mass distribution is shown, in units of standard deviations, under each mass plot.

Fig. 3 Upper limits for cross section times branching ratio as a function of invariant mass for (a) $K^+\pi^-$ and (b) pK^- final states. The mass scale is in GeV.

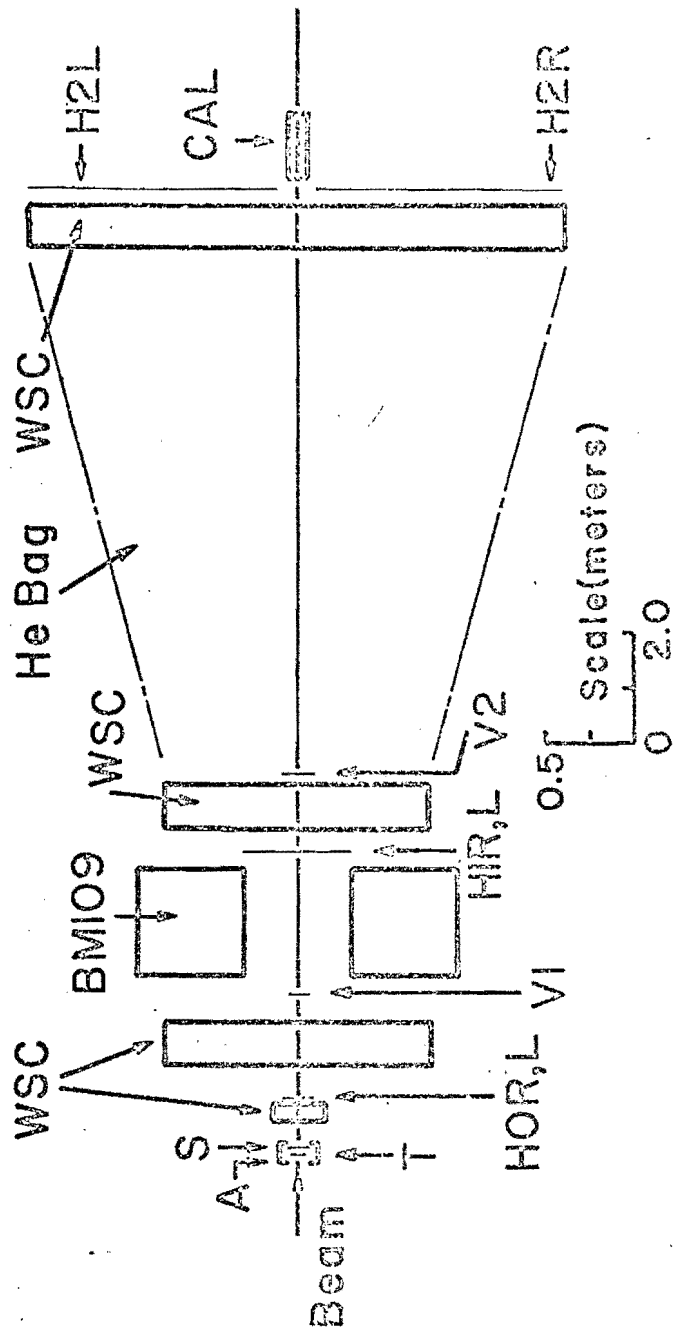

Fig. 1

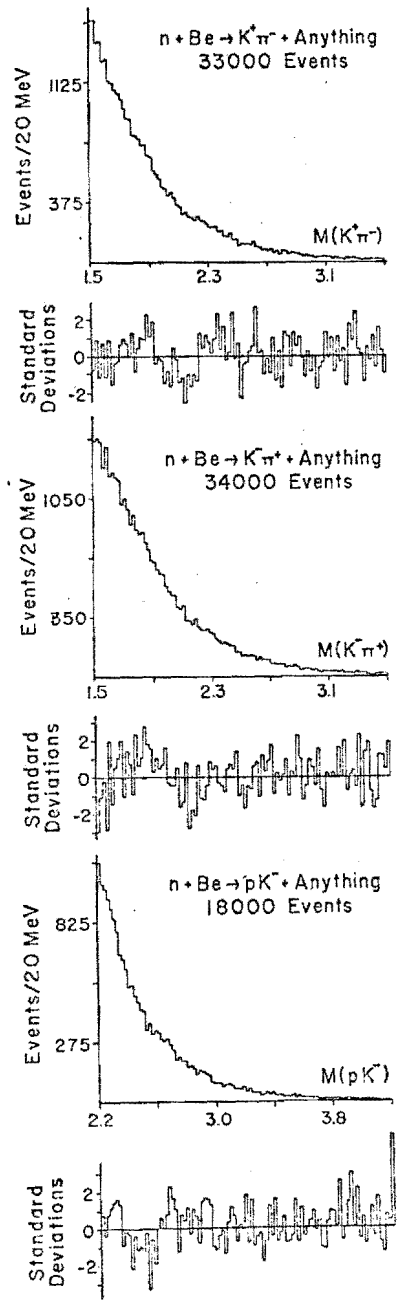
n + Be → K⁺π⁻ + Anything
33000 Events
Events/20 MeV
1125
375
M(K⁺π⁻)
1.5
2.3
3.1
Standard Deviations
2
0
-2
n + Be → K⁻π⁺ + Anything
34000 Events
Events/20 MeV
1050
850
M(K⁻π⁺)
1.5
2.3
3.1
Standard Deviations
2
0
-2
n + Be → pK⁻ + Anything
18000 Events
Events/20 MeV
825
275
M(pK⁻)
2.2
3.0
3.8
Standard Deviations
2
0
-2

Fig. 2

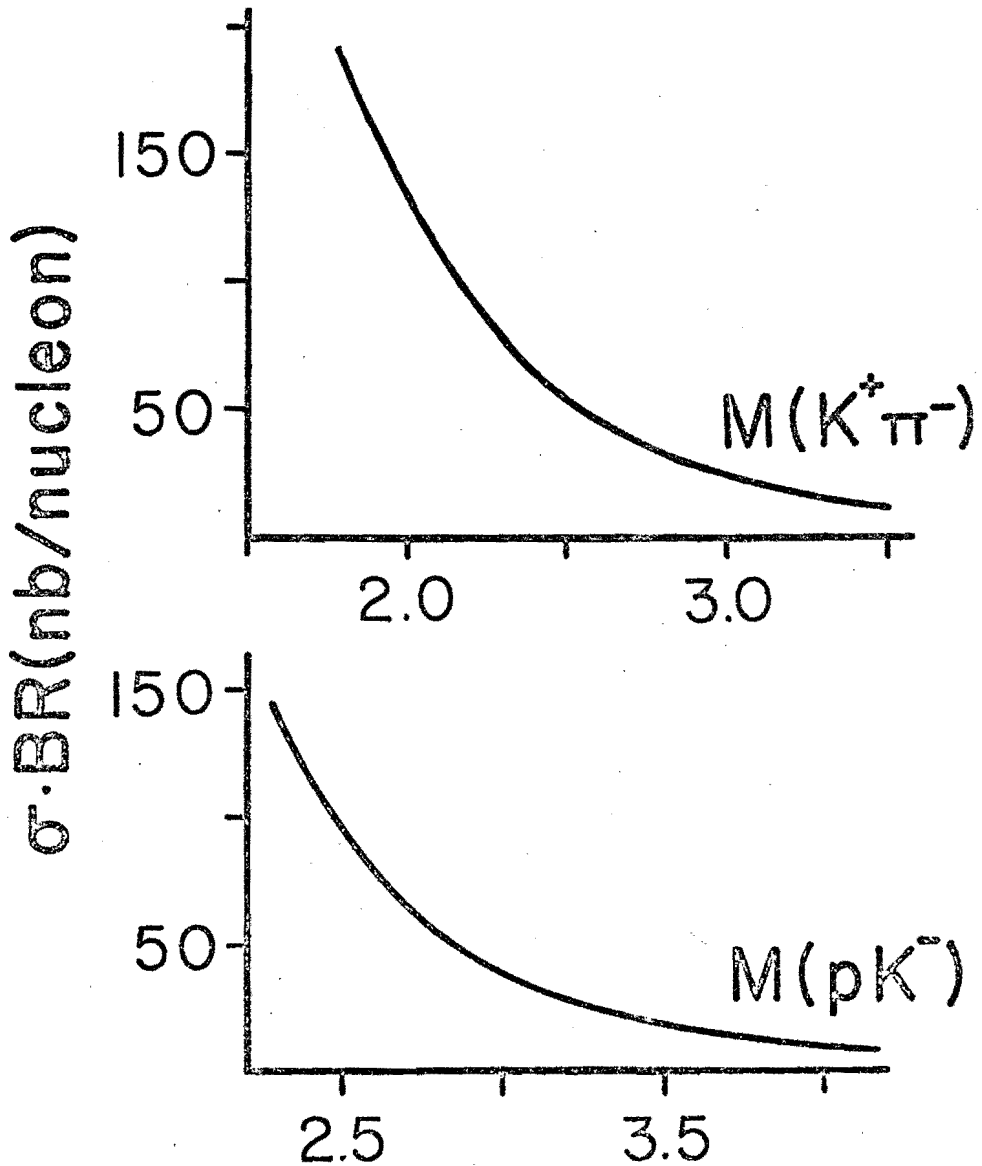
σ·BR(nb/nucleon)
150
50
M(K⁺π⁻)
2.0
3.0
150
50
M(pK⁻)
2.5
3.5

Fig. 3

APPENDIX B

The basic kinematics underlying the decay of a narrow mass state can be directly investigated using the formula for the effective mass of a high energy two-body system:

$$M^2 = (E_1 + E_2)^2 - (\vec{P}_1 + \vec{P}_2)^2$$

$$\simeq P_1 P_2 \theta^2 + (P_1 + P_2)\left(\frac{m_1^2}{P_1} + \frac{m_2^2}{P_2}\right).$$

While the leading term dominates at high M^2, the additional term is not negligible. For asymmetric breakup (in the lab), the effect of altering either the m_1 or m_2 assignments provides a significant dispersion of M^2. For very large M^2 the acceptance of the apparatus tends to enhance symmetric decays and our ability to distinguish between mass assignments diminishes somewhat.

We illustrate this point quantitatively in Fig. B1 in which we indicate how a 500 event peak at 2.5 GeV would appear when the charged particles are (correctly) interpreted as $\pi^- K^+$ (Fig. B1(a)), or (erroneously) interpreted as K^+K^- or pK^- (Figs. B1(b) and B1(c), respectively). The tails on the distributions shown in Figs. B1(b) and B1(c) arise from asymmetric decays as indicated above. (Other mass misassignments have also been investigated and yielded peaks even broader than those displayed.) The two-body system was assumed to have a lab momentum of 100 GeV/c and isotropic decay in its rest frame; the effects of resolution and geometric acceptance have been included. The distributions shown support the claim that a signal of this magnitude could be correctly interpreted via the described technique.

FIGURE CAPTIONS

Figure B1. For a 2.5 GeV particle of zero width which decays into $K^+\pi^-$, Monte Carlo results show: a) the expected distribution taking into account the experimental resolution; b) the expected distribution when the particles are assigned K^+K^- masses; c) the expected distribution when the particles are assigned pK^- masses. For the incorrect mass assignment the signal is reduced in amplitude and increased in width.

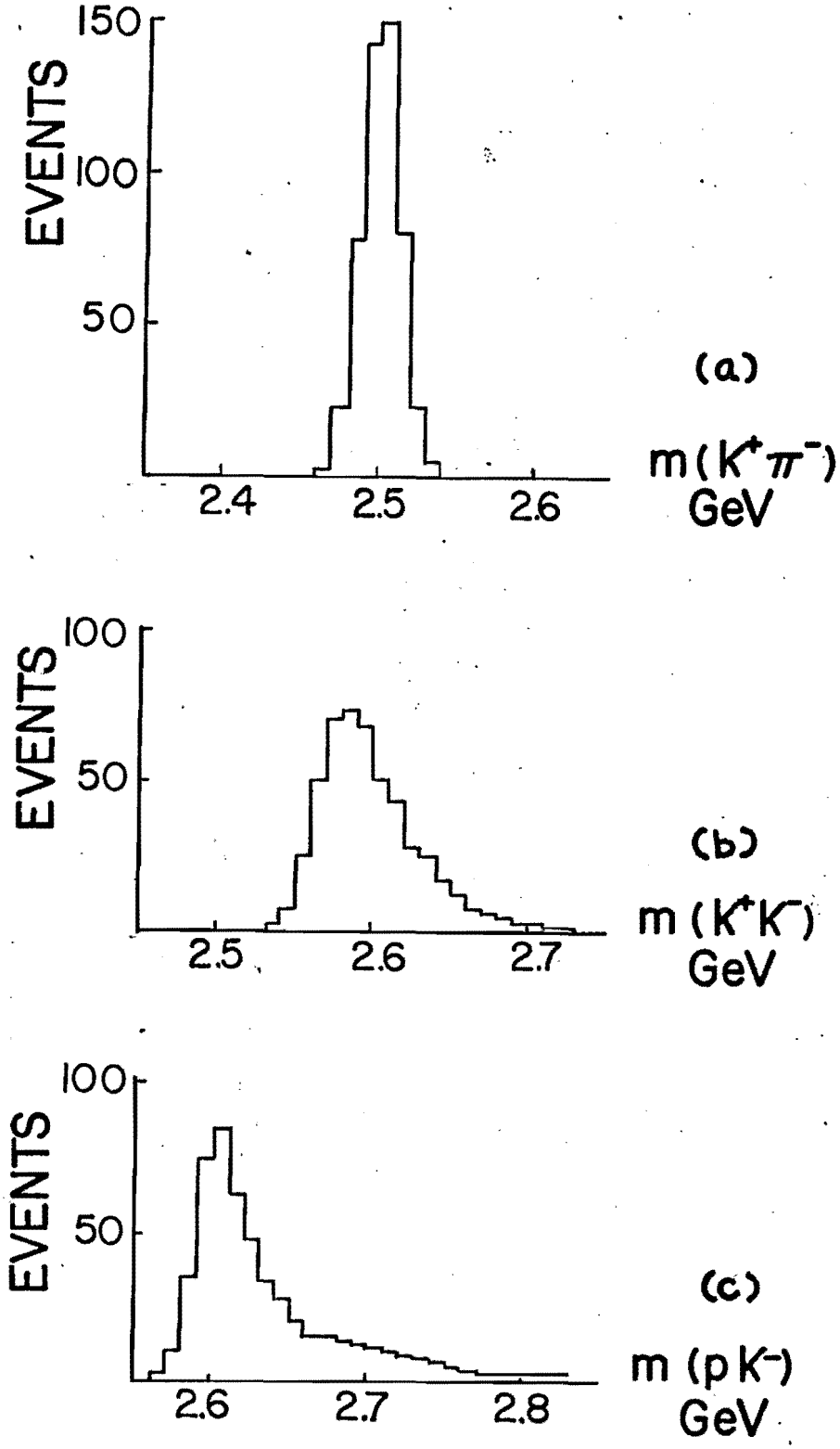
150
100
50
EVENTS
2.4
2.5
2.6
(a)
m(K⁺π⁻)
GeV
100
50
EVENTS
2.5
2.6
2.7
(b)
m(K⁺K⁻)
GeV
100
50
EVENTS
2.6
2.7
2.8
(c)
m(pK⁻)
GeV

FIGURE B1

APPENDIX C

Electron Identification

Electrons are identified using the last module of spark chambers, which has 1.8 cm of lead converter in front, and an array of 40 lead-lucite shower counters immediately behind. The counters are 2" wide x 36" long, consist of alternating layers of lead (¼" thick) and lucite strips, and each is viewed by a 56 AVP photomultiplier from one end. The counters are positioned vertically and grouped into two banks, each 40" wide x 36" high. A four-inch horizontal gap between the two banks allows the neutral beam to pass without interference.

The criterion for an electron is that the ratio E/p be of order unity, where E = energy deposited in the shower array, and p = the momentum of the incident particle.

The detector was calibrated in the following way. The γ converters situated in the M3 beam line, normally used to filter out photons during studies of neutron-induced reactions, were removed. Electron pairs were then generated by placing a thin lead target in the beam at the upstream end of the vee spectrometer.

Then a ½" trigger counter was positioned in front of the shower detector stand. Given the longitudinal distance of this counter from the BM109 magnet center and its lateral distance from the beam axis, electrons of specific momentum could be selected simply by adjusting the magnetic field to the appropriate value. Individual shower counters were then placed behind the ½" trigger counter and the energy deposited (pulse height) was measured as a function of electron momentum (Fig. C1). After conversion of pulse height to energy, the ratio E/p was obtained for each counter. A typical example is shown in Fig. C2 and reveals the energy resolution to be 40% FWHM.

In addition, the dependence of pulse height on the distance of the electron shower from the photo tube was studied by raising and lowering the shower counter in measured increments for fixed incident electron momentum (½" trigger counter in fixed position and fixed magnetic field). The results revealed a linear correction for signal attenuation.

FIGURE CAPTIONS

Figure C1. A plot of the pulse height measured in a given shower counter versus the momentum of the electron incident on the counter.

Figure C2. The ratio E/p for electrons detected in the shower counters: E = energy deposit, p = momentum of the incoming electron.

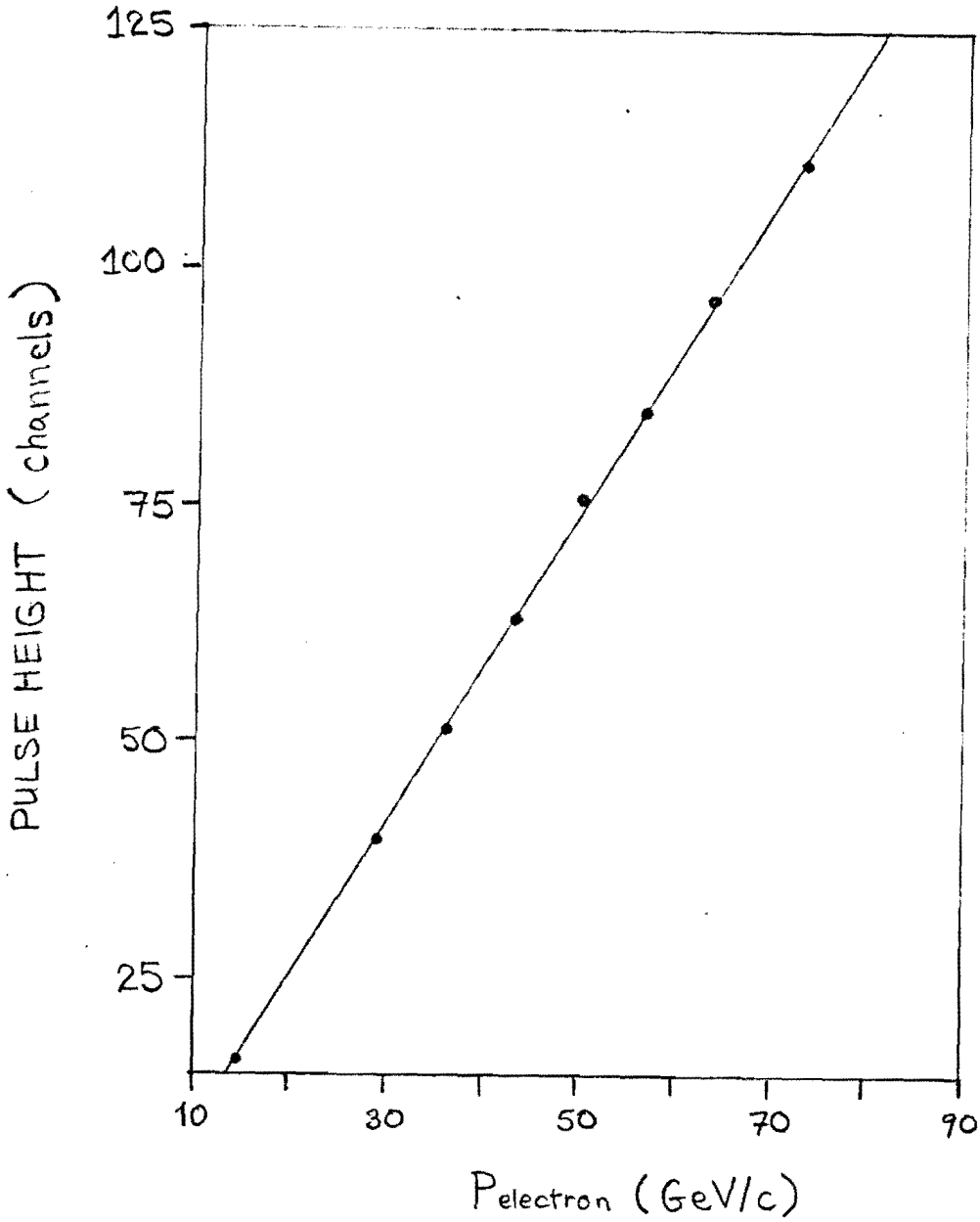

FIGURE C1

LINEARITY OF THE MEASUREMENT OF ELECTRON MOMENTUM FROM PULSE HEIGHT IN THE SHOWER DETECTOR.

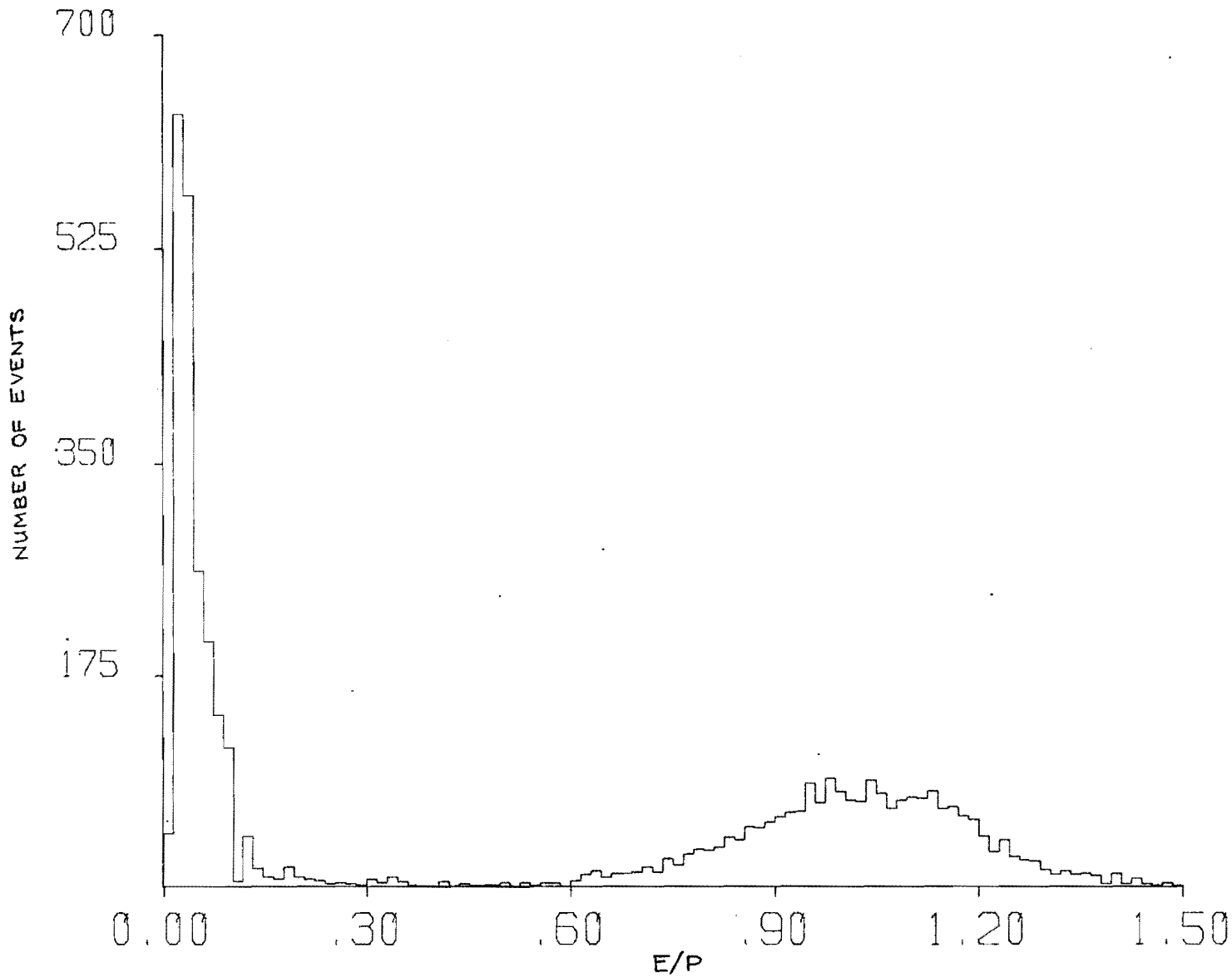

FIGURE C2