Fermilab Proposal No. 337

Scientific Spokesman:

D. Eartley
Proton Department
Fermi National Accelerator La
P.O. Box 500
Batavia, Illinois 60510

FTS/Comm: 312-840-3271

Measure of Di-Muon Events in the Meson Area

D. Eartly, G. Giacomelli
Fermi National Accelerator Laboratory

K. Pretzl
Max-Planck-Institut fur Physik-und-Astrophysik
Munich, Germany

September 20, 1974

national accelerator laboratory

September 20, 1974

To: J. Sanford

From: D. Eartly, G. Giacomelli, K. Pretzl

Following our conversation and the exchange of notes, we would like to request 1.5-2.5 hours of running time in the Meson Area with the double arm muon-range telescopes, with no target. The purpose would be to look for muon pairs directly produced in proton-nucleon collisions in the beam dump. This will be a "quick and dirty" type of measurement of dimuon events at moderately large masses ($1.2<m_{\mu\mu}<2.6$ GeV). We shall measure muon ranges, without knowing their sign. The importance of dilepton measurements was stressed in the recent dilepton workshop.

As sketched in the enclosed figure, the equipment consists of two equal range telescopes which look at the front of the beam dump, at an angle of 85 mrad with respect to the primary proton beam. 85 mrad corresponds approximately to 90° in the c.m. for 300 GeV incident protons.

Each telescope consists of six 5"x5" scintillation counters interspersed in steel blocks, so that each counter accepts muons with a momentum larger than 12.0, 14.4, 16.8, 19.2, 24.0, 31.2 GeV/c (corresponding to $1.4<p_t<2.7$ GeV/c). In each arm (α&β) the counters are placed in two fold coincidences $\alpha_2=C_1C_2$, $\alpha_3=\alpha_2C_3$, $\alpha_4=\alpha_3C_4$, $\alpha_{45}=\alpha_4C_{45}$ and $\alpha_5=\alpha_{45}C_5$; $\beta_2=C_6C_7$, etc.

The counter combinations of the two range telescopes are placed in two fold coincidences; the symmetric combinations are the following: $\alpha_2\beta_2$, $\alpha_3\beta_3$, $\alpha_4\beta_4$, $\alpha_{45}\beta_{45}$, $\alpha_5\beta_5$. Also some asymmetric

combinations are recorded ($\alpha_2\beta_3$, $\alpha_2\beta_4$, $\alpha_3\beta_2$, $\alpha_4\beta_2$, $\alpha_3\beta_4$, $\alpha_4\beta_3$, $\alpha_4\beta_{45}$, $\alpha_{45}\beta_5$). This allows some checks to be performed like the comparison of the $\alpha_2\beta_3$ and $\alpha_3\beta_2$ rates, etc. Furthermore the random rates [$(\alpha_2\beta_2)_R$ and $(\alpha_3\alpha_3)_R$] are recorded. The symmetric combinations correspond to dimuons emitted essentially at rest in the c.m. system, a configuration which is expected to have a larger cross section. The symmetric combinations cover the following range of dimuon masses ($m^2_{\mu\mu}=p_1p_2\theta^2_{\mu\mu}$): 1.22, 1.43, 1.63, 2.04, 2.65 GeV.

We tested this equipment with the beam impinging on the standard beryllium target, located approximately 4 meters in front of the beam dump. We have thus set gains and delays. In this situation we find very high singles rates (about 6 million per counter), very high rates for single muon production and also for double muon coincidences. The great majority of these events is due to pion decays in the 4 meter distance between the production target and the beam dump. It was possible to test this hypothesis during last week switchyard study when for a few pulses the Meson Area target was removed: all rates dropped by about an order of magnitude. Unfortunately, because of rate dependent effects, some counters were not anymore on their high voltage plateau. Nevertheless it would seem that the single muon rate in each telescope was at approximately the level found in experiments 70 and 100. There was also a sizable dimuon signal.

It is clear that further work will require running without the Meson Area target and that we have to spend some time readjusting photomultiplier gains. We thus request two runs, the first of about one hour and the second of about half an hour, without the Meson Area target. Beam intensities of $1\text{-}3\times10^{12}$ would be alright;

our main concern is that the beam arrives at the beam dump without hitting the beam pipes or other materials before the dump.

During the first run we will check high voltages and delays and take some measurements, including measurements of various types of randoms. Because of the large incoming proton beam flux, runs of few minute durations should give adequate statistics, adequate for the quality of the experiment. In the second run we will repeat the measurement and check reproducibility. Here we may request a lower beam intensity to have a smaller number of protons per bucket.

If the two runs are successful we may want to move the range telescopes, one at a time, to half the angle (43 mrad) in order to go to lower dimuon masses. For this purpose we may request two further runs of half an hour each.

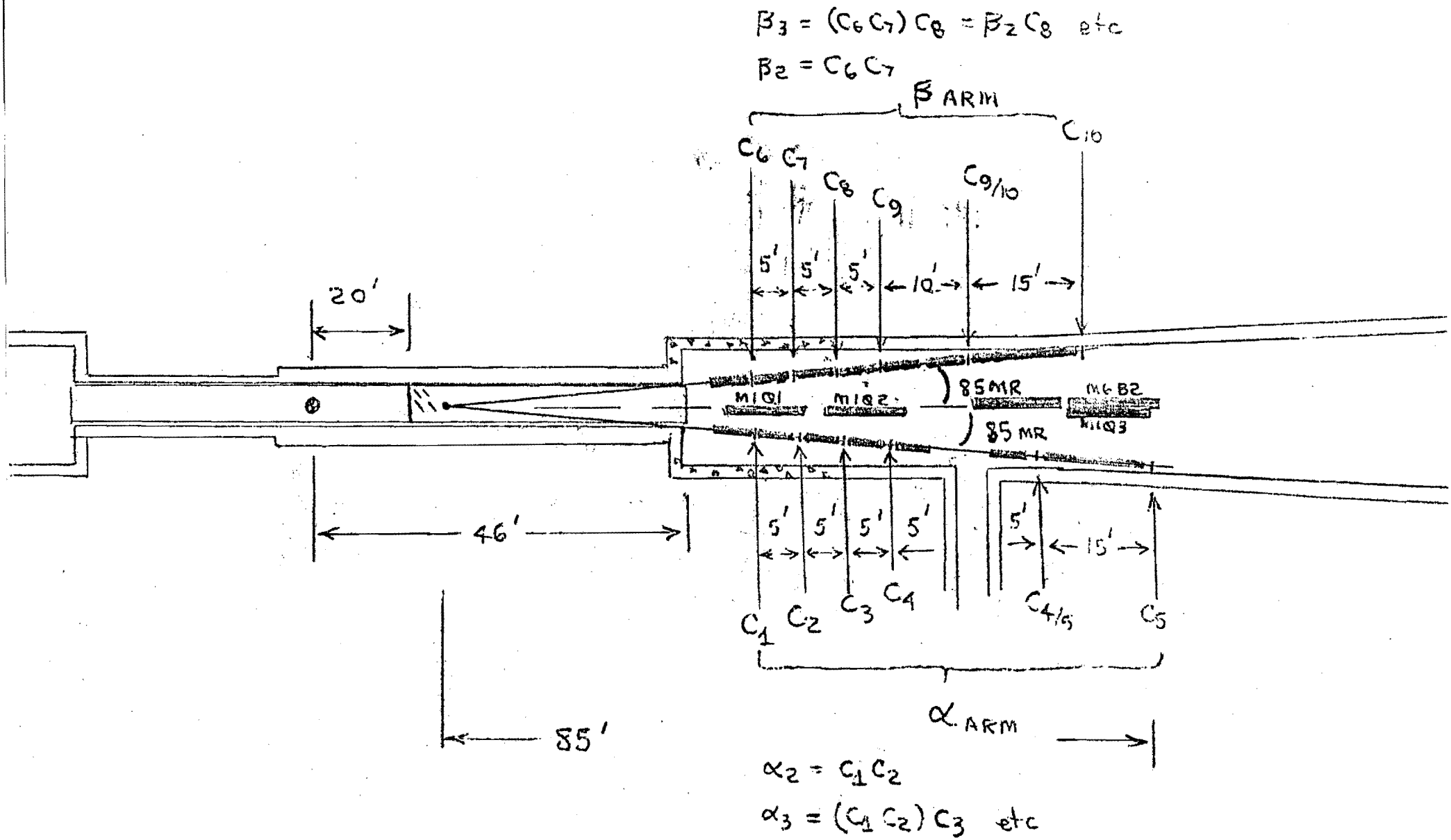

DOUBLE ARM RANGE SPECTROMETER