FERMILAB Proposal No. 321

Correspondent:

until Aug. 31, 1974, Prof. J. Lee-Franzini
Internal Target Area
Fermilab
Box 500
Batavia, Illinois 60510

after Sept. 1, 1974 Physics Department
SUNY at Stony Brook
Stony Brook, N.Y. 11790
Tel. (516)246-6598

A HIGH PRECISION EXPERIMENT TO MEASURE THE INELASTIC P-P CROSS SECTION AND ITS ASSOCIATED FORWARD MULTIPLICITIES AT SMALL MOMENTUM TRANSFER

S. Childress and P. Franzini
Columbia University, New York, New York

and

F. Bletzacker, J. Lee-Franzini, R. McCarthy,
and R. D. Shamberger, Jr.
SUNY at Stony Brook, Stony Brook, N.Y.

A High Precision Experiment to Measure the Inelastic p-p Cross Section and Its Associated Forward Multiplicities at Small Momentum Transfer

S. Childress and P. Franzini
Columbia University, New York, N. Y.

and

F. Bletzacker, J. Lee-Franzini, R. McCarthy,
and R. D. Schamberger, Jr.
SUNY at Stony Brook, Stony Brook, N. Y.

ABSTRACT

We propose to perform a high precision ($\Delta M^2_x = 0.5$ GeV^2, $\Delta t = 2\%$, $\Delta s = 2.5\%$), high accuracy($\sim$1% per point for a 1000 point mapping in the t, s, M_x^2 space), wide t, x range ($.011 < |t| < .234$ GeV^2/c^2, $.75 < x < 1.0$) experiment on inelastic proton-proton collisions and its associated forward multiplicities. We propose to perform this experiment at the Internal Target Area of FNAL using a solid state detector spectrometer, a hydrogen jet of our own manufacture, and a scintillator hodoscope.

General Remarks

We want to perform a high precision experiment to measure the inelastic scattering cross section and its associated forward multiplicities in proton-proton collisions at small momentum transfer. We argue for the need of such a measurement, and we propose to perform the experiment at the Internal Target Area of the Fermi National Accelerator Laboratory, using a hydrogen jet of our own design and construction. The proposal consists of four sections:

(i) General remarks summarizing the present state of knowledge in this area. (Cognoscienti, please skip this section.)

(ii) An enumeration of our past technical successes and experimental results, to support our contention that our group is particularly suited to perform such an experiment.

(iii) The proposed experimental setup, namely the geometry, expected rates, jet configuration, etc., as well as the anticipated accuracy of the experimental measurements.

(iv) A description of what is needed from the laboratory, showing that little support is needed on the part of Fermilab except for the normal space allocations and moderate alterations of the size of beam pipe for a short distance, and some maintenance help to run our mini-jet.

Ia. Introduction

It is an interesting fact that while experimental physicists have been studying the proton and measuring its properties for over half a century, there still does not exist a complete theory of Strong Interactions which explains the fundamental nature of the proton. For example, why do all baryons end up eventually as protons? Why is its mass about 1 GeV? In short, what is a proton? Five years ago, Yang[1] and Feynman[2] had independently suggested general formulations of hadron interactions, which inspired a host of proton-proton collision experiments at ISR and FNAL.[3,4,5] During these last five years, there has also been a proliferation[6] of semi-phenomological theoretical formulations whose main virtue seems to be to allow a complete new fitting of various constants whenever some new data appears.

The high energy p-p collision experiments performed in the last few years have established that (i) the total proton-proton scattering cross section at high energy remains mostly constant, rising $\sim$10% over a range of $\sim$1000 GeV/c.[7] (ii) The elastic cross section is approximately 20% of the total cross section, and appears to be mostly a shadow of the absorption.[8] They also confirmed a feature of p-p collision known from past experiments, that all emitted particles from these collisions have limited transverse momentum (P_t), independent of initial beam energy. Roughly, the P_t distribution could be characterized by $e^{-6P_t^2}$, i.e., $\langle P_t \rangle \sim 300$ MeV/c. Hence, the bulk of the p-p collisions occur inelastically and have small transverse momentum. It behooves the experimentalists to do a detailed study of that

region such that a coherent experimental picture emerges, upon which any fundamental theory of strong interactions could be tested.

At present the experiment picture is far from clear (this will be discussed in the next section, Ib.). Different experiments conflict on their conclusions on the characteristics of the inclusive distributions.[9] Differing methods, geometry, and statistics may have contributed to the apparent discrepancies. The fact remains that not a single experiment on proton-proton inelastic collisions at low transverse momentum has been performed with high enough accuracy, wide enough angular and transverse momentum acceptance, and sufficient statistics to resolve the above described ambiguities, (not to mention their subsequent interpretations). We discuss in the following the experimental considerations necessary to the design of an experiment with the above mentioned desired attributes.

Ib. Experimental Considerations and Summary:

A p-p collision experiment at low transverse momentum is ideally performed by detecting the slow recoil proton and measuring its angle Θ and kinetic energy T. (Choosing the z axis along the beam proton direction) we have the following configuration:

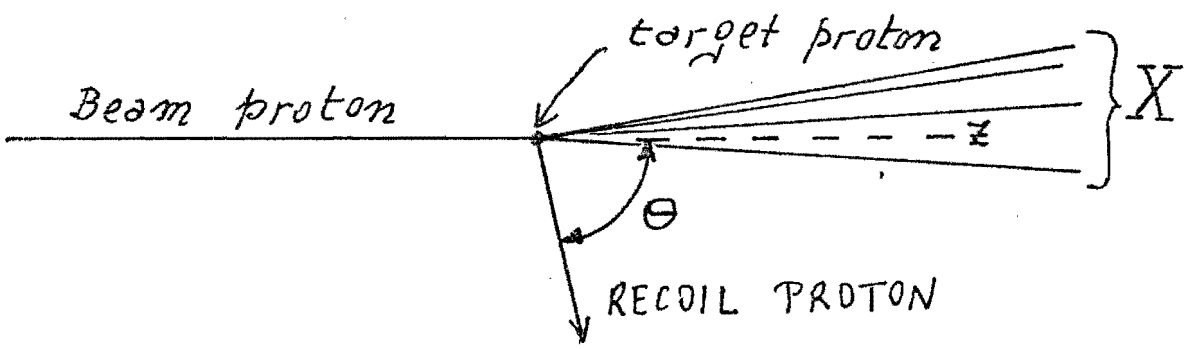

As is customary, X denotes the (quasiparticle which constitutes) the sum of all collision products excluding the recoil proton. We define s to be the total energy squared, $s = (p_{beam} + p_{target})^2$, t to be the invariant four-momentum transfer to the target proton, $t = (p_{target} - p_{recoil})^2$ which reduces trivially to $-2m_pT$ in our case. The missing mass squared (M_X^2) is the sum of the total outgoing four momenta squared which can be reduced to $M_X^2 = m_p^2 - 2T(m_p + E_{beam}) + 2P_{beam}\cos\theta\sqrt{T^2+2m_pT}$ where m_p, P_{beam} and E beam are self explanatory. In terms of the Feynman variable x,

$$\frac{M_X^2 - m_p^2}{s} = 1 - x; \quad t = \frac{-p_t^2 - m_p^2(1-x)^2}{x} \approx -p_t^2 \text{ at } x \approx 1$$

We note therefore, that an experiment which has the capability of measuring kinetic energy of the recoil proton T from 6 MeV (t=-.011) to 130 MeV (t=-.234) for each M^2_x accepts 70% of the inelastic cross section within its measurable range, i.e.

$$\int_{-.234}^{-.011} e^{6t}dt \Big/ \int_{-\infty}^{0} e^{6t}dt \cong .7$$

In contrast, at ISR where events with low P_T tend to remain in a cone of the order of milliradians around the original colliding proton directions (hence remain within the beam pipes), the lowest P_T^2 value experimentally investigated so far was .275 (CHLM group).[3] Therefore at ISR the low |t| behavior of the inelastic cross section has not been probed directly. The CHLM experiment had a momentum resolution of 1%, angular resolution of 2 mradian, which led to a M_X^2 resolution of 10 GeV^2.

The M_X^2 values which can be produced at recoil angles of 90° to 45° for recoil protons of the above mentioned kinetic

energy range (6-130 MeV) depend on the beam momentum. For ex. at 450 GeV/c P_{beam} M_X^2 values from 1 GeV^2 to 200 GeV^2 can be produced. In terms of the Feynman variable x this corresponds to an x range from .75 to 1. In contrast, some previous Fermi NAL counter experiments on inelastic p-p scattering accepted x ranges limited from .89 to 1.0,[4] and .80 to .93.[5] For experiments whose main aim was to measure the elastic scattering cross section the x range was as small as .996 to 1.0.[10] The mass squared resolution in the CU-SB collaboration[4] was $\approx$ .75 GeV^2, the mass squared resolution in the Rutgers-Imperial College Collaboration averaged about 5 GeV^2. The M_X^2 resolution in bubble chamber experiments ranged from ±0.7 GeV^2 at 100 GeV/c P_{beam} to 2.8 GeV^2 at 405 GeV/c.[11] The main deficiency of the bubble chamber experiments is the paucity of events, typical numbers run to about 400 events[11] in total for an experiment in the x region of 0.9 to 1.0 whereas typical numbers for a counter experiment could be 10^5 in the same x slice.[4] The main virtue of the bubble chamber technique is the large solid angle available, such that the forward cone of particles produced in the collision is in the same picture and the associated forward multiplicities are simultaneously obtainable. Again, however, the lack of a large number of events makes a detailed study of the M_X^2 distribution, t dependence and s dependence difficult. The last, especially since different groups are usually assigned different beam momentum exposures, leads to normalization differences which could cause problems in the interpretation of the s dependence of the inelastic cross section. In fact, even when the same group does experiments

on two different beam momentum exposures, the lack of events could lead to some rather tenuous conclusions.

The s dependence of the inelastic cross section is most easily studied at the Internal Target Area at FNAL, where a continuous range of beam momentum is available from 8.94 GeV/c to whatever maximum momentum the beam is currently accelerated. The Rutgers-Imperial College Collaboration[5] has done such a study for s from 108 to 752 GeV^2. Their result points to a larger s dependence of the inelastic cross section than those found at ISR.[3] It remains to be seen whether this discrepancy is real when experiments in the Internal Target Area at FNAL are performed with narrower s resolution than 30 GeV/c, (and with data over a wider x region).

The M_X^2 distributions are most controversial, ISR results tend to favor a $1/M_X^2$ dependence with a broad diffractive peak extending to $\sim$50 GeV^2.[3] Bubble chamber results tended to agree with this result[12], leading to the much quoted interpretation that the Pomeron is dominant in this region. The CU-SB collaboration result differed sharply from the above, showing a definitely much sharper peak (extending to $\sim$ 16 GeV^2), with the spectrum composed mostly of a $1/M_X^3$ term plus a constant term (which is consistent with scaling with s). Recently a bubble chamber result seems to indicate a similar denial of the Pomeron dominance.[11] We (the CU-SB Group) had demonstrated that by folding in the ISR M_X^2 (10 GeV^2) resolution into our M_X^2 spectrum we obtain a general shape similar to those obtained at ISR.

Moreover, our present results from E-221 support our previous finding that the M_X^2 spectrum is dominated by a $1/M_X^3$ dependence at low M_X^2 (<16 GeV^2) and flattens out at higher M_X^2.

It has been generally agreed that the t distribution is approximately e^{-6t} for M_X^2 greater than 40 GeV^2 (x<.87). For $M_X^2 \approx 2$, i.e. near the $N^*(1400)$, two groups have observed slopes of $\sim$18.[4] For a small region of M_X^2 between 8 and 14 GeV^2, our (CU-SB) t dependence did not look exponential at small t, ($|t| < .07$). It is for a more detailed look at this as well as an investigation of the s dependence and a check on the M_X^2 spectrum that we are performing a p-p collision experiment at the Internal Target Area at FNAL using a CH_2-C subtraction method which we had employed in the extracted beam in the ν Hall.[4]

The charged forward associated multiplicity has been measured to be $\langle n \rangle = 2.8 \pm 0.5$ for protons with $x > .99$, and for protons in the range of $0.72 < x < 0.844$ the multiplicity was measured to be $\langle n \rangle = 6.7 \pm 1.5$.[13] Clearly the forward associated multiplicity in the large x region has not even begun to be investigated completely.

II. Past Technical Innovations and Present Status of E-221

In the past months we have been performing an experiment to measure the doubly differential inelastic p-p cross section $\frac{d^2\sigma}{dt\,dM_X^2}$ at the Internal Target Area of FNAL. The method used is similar to our previous experiment[4] using a solid state spectrometer to detect the recoil proton's angle and kinetic energy T. The main

difference has been the use of a rotating target inserted in the accelerated proton beam, allowing the selection of different beam proton momenta as desired. The rotating target is a wheel supporting 80 polypropolene fibers (16 μ in diameter each) for half of its circumference and 80 carbon fibers (8 μ in diameter each) on the other half. (See attached figure # 1). This wheel is rotated at 60 cycles per second, thus allowing us to collect recoils, alternately from the CH_2 and C targets for each wheel revolution. This makes the CH_2-C subtraction to obtain the free H_2 inelastic cross section greatly independent of the time structure of the beam.

The major problems were of a technical nature because our running period (Feb-mid May) coincided with the period of intensive effort on the part of the accelerator staff to reach the unprecedented accelerator intensity of 10^{13} protons per pulse. They are to be congratulated in their success in the achievement of this goal. On the other hand, we experienced a series of difficulties, perhaps inevitable from parasiting on this higher intensity effort. They were, namely, extremely high target-beam interaction rates, sudden demise of our polypropene target from any abnormally large pulse, variable beam-target interaction rate during any given pulse, sudden shifts in proton orbits resulting in variable solid angle as seen by our detectors, lack of access time to replace burnt out targets, and sometimes even the lack of such targets available for replacement.

Many of the above mentioned problems could be overcome and

we pride ourselves in that we did overcome most of them and in ingeneous ways. (i) We remade our electronics so that charge collection from the detectors is done fast and efficiently, such that we can collect 4000 triggers per second. (ii) We built a beam servo which tracks the beam-target rate, it raises and lowers the target accordingly such that the fluctuations of the beam-target interactions which used to be about a factor of six in one second has been corrected to variations of no greater than fifty percent within a second. (iii) To minimize the burning off of the polypropene, we insert ("pop in") the target in the vicinity of the beam only during a portion of the ramp. By constantly monitoring during the acceleration cycle, the interaction rate of another carbon target downstream of us, we could foretell whether a beam pulse had grown abnormally large prior to our intended insertion of the poly target and prevent the poly target from "popping in" for that pulse. With all these precautions and innovations we were able on several occasions to use the same poly target for periods upwards of forty eight hours, no mean achievement since polypropene melts at 174°C. Of course, whenever a beam pulse blows up when our target is up in the beam, nothing can save it. The only remedy is a fifteen minute access to replace the target with a new one. It is perhaps a sign of how stable the accelerator has been that we often had to wait for days to obtain permission for these fifteen minute accesses.

Since for each hydrogen event that we use to obtain the p-p inelastic scattering cross section, we need to take on the average fourteen extra events (from bound nucleons in carbon and polypropene), we must analyze huge samples of data for each test and data

run. For a CDC 6600 equivalent type general purpose computer, it takes half a millisecond of CPU time to obtain the kinetic energy of each recoil proton we detect. Our typical test runs are of the order of tens of millions of events. Their analysis only in so far as getting their kinetic energy distribution already implies hundreds of hours of computer time, not obtainable either on a short budget or in a short time. But, given the extremely variable conditions of the accelerator, a fast feed-back on the results from our test runs is essential. So during this period we also designed a special purpose computer (called the "event analyzer"), built and tested it. The Event Analyzer yields the kinetic energy of the recoil proton "on-line", within one microsecond. It also frees our PDP-11 from full time tape-writing to allow for periodic display of many consistency checks. This ability of performing an analysis in 1/2 μs instead of 1/2 ms on a 6600 equivalent computer is technical first in itself (CERN has a large team working on a similar idea for on-line analysis of wire chamber data).

We have "on line" visual display of the events accepted by the "event analyzer", as well as those rejected by the "event analyzer", the carbon to poly ratio, so that we have an instantaneous feedback in the changing conditions of the target and compensate accordingly. (It is amusing that after the poly fibers were burnt off at higher energies, recently we had to run in the vicinity of 20-57 GeV beam energy toward the end of our runs.)

We have succeeded in using the correlation of energy

losses in two semi-conductors to obtain the particle's kinetic energy. This has never been done before; nuclear physicists and E-186 limit themselves to the use of particles which stop in the detector only, thereby severely limiting their t range. We use "keyhole" detectors to define our detector aperture, i.e., detectors with only a window of electrodes deposited on the semiconductors so that we do not have to use massive collimators which could introduce background scattering.

In summary, we are now able to take 10,000 analyzed events/sec in a $|t|$ range from .01 to .25 $(\mathrm{GeV}/c)^2$ and missing mass squared region from m_p to over 100 GeV^2. Of course we have also installed sundry of monitoring devices such as a "cow" whose mooing pitch is proportional to our data intake and the cessation of such mooing alerts us to possible computer, beam, detector malfunctions, etc.

One of the results of having the above described system functioning fully since mid-April is that, within weeks instead of months, we learnt that most of the data we had taken in May were contaminated by the tungsten plug placed in the target box by E-184. We had been assured of its harmlessness because it was not the narrowest constriction in the beam transport system. Unfortunately, whenever our target is in the beam, for any detected proton recoil, some 5×10^4 particles are produced in a very narrow cone forward, a fraction hit the tungsten and send out protons which are seen by our detectors. This made our delicate but clean method of CH_2-C subtraction become contaminated with background which is highly variable depending on beam and machine

conditions. The tungsten plug and its support have just been removed two weeks ago.

We are now collecting events with eight three-detector telescopes spanning about 18° with 20% covering efficiency in θ. The whole array is moved by $\sim$ 0.4° every hour to uniformly cover the above range in θ. As indicated above, the events collected are analyzed, i.e., for each trigger the particle type (proton, deuteron, or triton) is identified, the kinetic energy of the particle is computed and events are directly stored in kinetic energy histogram for each of the eight telescopes, for each of eight beam energy gates and for both poly and carbon targets. The 128 histograms, in approximately 1 MeV T bins are written on tape every 20 minutes of data taking, together with deuteron and triton count as well as total dead time measured for each telescope. Although typically 20 x 10^6 events might be collected in 24 hours of actual running time, only 200 seconds of 6600 computer time are necessary to perform the CH_2-C subtraction and to transform those data into values for $d^2\sigma/dtdM_X^2$. Attached are two graphs showing preliminary results for $\frac{d^2\sigma}{dtdM_X^2}$ vs. M_X^2 at beam momenta of 300 GeV/c and 55 GeV/c. Please note the clear separation of the $N^*(1400)$ which demonstrates our good M_X^2 resolution. See figures 2 and 3.

The above represents the analysis of some 16 x 10^6 raw events. Because of the subtraction procedure this yielded approximately 10^6 hydrogen events carrying errors corresponding to 10^5 events. Clearly, our sophisticated and high powered

analysis techniques (developed in a remarkably short time) are mismatched with a wilting, melting, rotating CH_2 target. As the beam intensity will continue to increase, no additional ingenuity will allow the CH_2-C technique to be a viable method for a high precision experiment.

We did enumerate, however, our technical battle in an almost quixotic situation to demonstrate that we are a technically superior, knowledgeable, and adaptable team. Therefore, we feel that our estimates of the feasibility of the design and manufacture of a mini-H_2 jet are realistic, and that our ability to cope with and comprehend large bodies of data are proven.

III. Proposed Experimental Setup (geometry, rates, jet configuration, etc.)

a. Solid State Spectrometer

Our proposed experimental setup will be very similar to the present one sketched in Figure 1 for E-221. To detect and measure the recoil protons we will still use a solid state spectrometer and the associated electronics which we had developed and built. We recall that this system is capable of analyzing 5×10^6 events per hour, and is completely tested and operational. The most vulnerable part of the spectrometer is the solid state detectors which have a finite lifetime under radiation. It has been our experience that solid state detectors suffer considerable damage mostly due to beam losses at injection. Especially with the present improved intensities and the

even higher anticipated ones, the detectors must be shielded from this radiation. How this could be accomplished will be discussed in the space requirement section. To compensate for the larger size of the jet with respect to the fiber size, we will construct a new scattering chamber twice as long as the present one to maintain the same angular resolution (ΔM_X^2 will still be 0.5 GeV^2). We will also maintain the same θ range covered, such that M_X^2 will be detected from 1 to 200 GeV^2 ($.75 < x < 1$). The main modifications then are (i) the use of an H_2 jet for target (ii) the addition of a scintillation hodoscope to detect the associated forward multiplicity.

b. H_2 Jet

Due to the large increase in the FNAL accelerated beam intensity, it has become feasible to perform experiments in the accelerated beam itself with very low intensity hydrogen jets. For example, the jets could be of intensity 10^3 to 10^4 times smaller than the present USSR H_2 jet target. If the hydrogen flow is reduced by a factor of a thousand, it has been shown at the Internal Target Area that the removal of the injected hydrogen gas in the beam pipe can be trivially accomplished by ordinary pumping methods. The test was actually performed by turning off the liquid helium cryopump and removing the gas with two diffusion pumps situated more than 1 meter away on either side of the jet. It should be noted that in this test the cryopump was still in place, thus forcing the hydrogen to diffuse to the two

pumps through rather complicated obstacles. Yet the pressure in the jet chamber still remained well within tolerable limits. We, therefore, would like to propose to build such a low intensity jet with an appropriate "catcher", and pump directly under the jet. We fully expect to achieve a gas removal speed at least ten times larger than the one observed in the above mentioned test. A sketch of our proposed H_2 target is shown in Figure 4 . We are confident in the construction of such a low intensity jet which will have the adequate final pressure to satisfy the FNAL vacuum requirement. We will begin the construction of the designed jet upon approval of the experiment.

Another compelling reason for building a new low intensity jet is that we have learnt in our previous experiment that there should be no material near the interaction region which is visible in the telescope solid angle. This requirement is not satisfied by the USSR jet, thus making the measurement of inelastic p-p scattering using it as a target be contaminated by background scattering from the various objects surrounding the jet itself. We recall that the USSR jet was designed for a much lower intensity accelerated beam, and typically ran at a density of 10^{-7} gram/cm^3 or higher, hence needed all the associated constructional complexities. We are speaking of a H_2 jet with a density of 10^{-10} gm/cm^3 or lower (hence a simple mini-jet).

c. Scintillator Hodoscope

The associated multiplicity has to be measured in a very narrow cone forward. To accomplish this we propose to put a series of scintillation counters concentric to the beam covering progressively smaller angles in the lab. This is shown in Figure 5 . This arrangement allows the detection of forward particle down to 2 mrad in the lab. The ideal arrangement for this measurement would be to have a vacuum pipe 2 ft. in diameter extending 50 ft. downstream from the target, with the 3 concentric hodoscopes placed inside. An intermediate solution is shown in figure 5. An alternate solution would be to have the same pipes shown in the previous figure but with a constriction for the insertion of the hodoscope around the beam pipe.

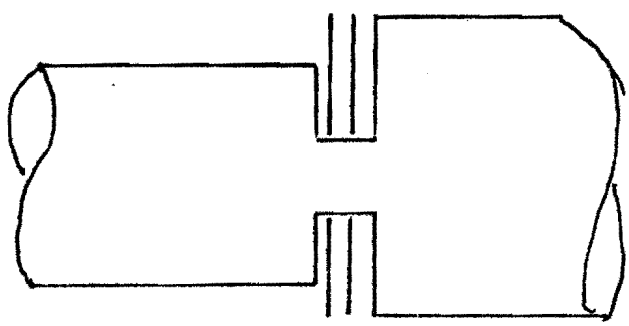

Whatever system one adopts, corrections will be necessary to the data due to interactions in a less forward hodoscope producing secondaries which might cross a more forward hodoscope. These, however, can be corrected for by increasing the amount of matter at each hodoscope location and extrapolating to zero. A jet of density 10^{-10} gm/cm^3 is equivalent to 100 meters of 10^{-8} torr vacuum. Most of

the background is removed by requiring coincidence with recoils at large angle. It is, however, very important to maintain very good vacuum for some 30-100 meters of beam pipe upstream of us.

d. Rates

Our rate calculations are based on a jet density of 10^{-10} gm/cm^3 with an r.m.s. thickness of the jet of $\approx$ 0.5 cm. One expects an interaction rate of $\sim 10^{13}_{\text{beam}}$ protons x 4 x 10^{-26} cm^2 (σ_{tot} from previous measurements)

$$\times\ 10^{-10}\,\text{gr/cm}^3 \times 0.5\ \text{cm}$$

$$\times\ 6 \times 10^{23}\ \text{protons}/\text{gm}$$

$$= 10^{13} \times 4 \times 10^{-2} \times 10^{-10} \times .5 \times 6 \times 10^{23}$$

$$\cong 1.25 \times 10^{26} \times 10^{-26} \text{ or } 1.25 \text{ interactions}/10^{13} \text{ beam p / turn}$$

$$= .625/10^{13} \text{ beam protons}/\mu\text{sec.}$$

Since our solid angle for recoils is $\sim .4 \times 10^{-3}$ we get $\approx 10^3$ recoils $/10^{13}$ beam protons/acceleration cycle. Should the beam intensity become 5 x 10^{13} this would still give an acceptable total interaction rate. (Of course, one could always lower the jet density if so desired).

Under the above mentioned conditions it is possible to perform accurate measurements of $d^2\sigma/dt\, dM_X^2$ for $p + p \rightarrow p + X$ with rates of 100 to 1000 events/machine cycle or 5 x (10^4-10^5) events/hour. Thus in 50 days of running one can in principle obtain $\frac{d^2\sigma}{dt\, dM_X^2}(s)$ over a grid of 1000 cells in the t, M_X^2, s space to a statistical accuracy of the order of 1%.

While we have developed techniques which allow us to collect data at about 10 times the above mentioned maximum rate, we are limited in this experiment to the smaller rates because of the simultaneous measurement of the forward associated multiplicity. Since typically each interaction in the jet target produces at least one forward charged particle, the total interaction rate has to be limited to more manageable levels. The rates quoted above are well within the limits of standard scintillation techniques.

IV. Space, Running Time, FERMILAB Support Requirements

a. Space Requirement

All the proposed set up seems to fit rather easily in the tunnel at C-0, with the exception of the recoil scattering chamber. As mentioned in section III the detectors must be shielded from radiation due to beam losses at injection. The most natural solution would be to have the detectors placed recessed into the tunnel wall. Although such an opening of the tunnel wall is going to be excavated on the side close to the beam line, in the near future (see internal FERMILAB report re. Construction of the Spectrometer Enclosure) it is not wide enough to simultaneously accommodate this experiment and the approved Experiment E-198. We would like to urge that the presently proposed opening be significantly enlarged in order to enhance the usefulness of the C-0 improved facilities. As far as our experiment is concerned, a niche in the tunnel 4-feet deep, 3-feet high and 7 feet along the beam line is adequate to accommodate our recoil chamber. If it is not possible to extend the planned opening, we would still like to request that such a small niche be carved out on the side of the tunnel wall to accommodate our scattering box. (See Figure 6, and Figure 7)

An alternate solution would be to slant the box across the tunnel at 45° to the horizontal as indicated in Figure 8. This would also require some shielding of an amount to be determined to be placed upstream of the scattering chamber, eight feet of steel (say an old magnet) is probably sufficient.

b. Time Estimates and FERMILAB Support Needs

We feel that the jet construction might take 3 to 6 months, similarly for the scattering box and hodoscopes. Installation could very easily be done during a normal two-week shutdown, once all the components (jet, box) have been tested to the satisfaction of the Internal Target Area personnel.

The main equipment support required from FERMILAB is a hydrogen liquifier of minimum capacity for the cooling of the hydrogen gas. We also need liquid nitrogen for pre-cooling and vapor trapping. We also request that the vacuum upstream of our jet (for ≈50-100 meters) be maintained to better than 10^{-8} torr. The whole control system for the jet would be provided by us, as well as the solid state spectrometer, its associated electronics and the scintillator hodoscope. Some cabling additional to the present E-221 cables (belonging to and installed by ourselves) will be necessary. We would like to keep our present one and 2/3 Porta-Kamp as well as requesting that the remaining 1/3 of the Porta-Kamp be granted to us since we are quite crowded even now. We shall not need more than the 100 hours of the CDC6600 time normally used for testing on site by most experiments. The quater rack of PREP equipment used by E-221 will still suffice our needs since as usual we build and maintain most of our electronics.

c. Testing and Running Time Requested

At C-0 beam time is better requested in terms of occupancy time. We expect to need 3-6 calendar months at 30% duty cycle for testing and 6-9 calendar months (at 30% duty cycle also) for data taking. Please note also that the physical size of our experiment is small so it will not tie up much space.

REFERENCES

1. C. N. Yang, High Energy Collisions, Gordon and Breach, 509 (1969).
2. R. P. Feynman, High Energy Collisions, Gordon and Breach, 237 (1969).
3. M. G. Albrow et al., Nucl. Phys. B54, 6 (1973). M. G. Albrow et al., Nucl. Phys. B51, 388 (1973).
4. S. Childress et al., Phys. Rev. Lett. 32, 389 (1974).
5. K. Abe et al., Phys. Rev. Lett. 31, 1527 (1973).
6. S. D. Ellis and A. Z. Sanda, Phys. Rev. D6, 1347 (1972).
   F. E. Paige and L. L. Wang, Nucl. Phys. B46, 477 (1972).
   K. Abe et al., Phys. Rev. Lett. 31, 1530 (1973).
7. S. R. Amendolia et al., Phys. Letters 44B, 119 (1973).
   U. Amaldi et al., Phys. Letters 44B, 112 (1973).
8. U. Amaldi, High Energy Collisions - 1973, AIP, 47 (1973).
9. J. Lee - Franzini, High Energy Collisions - 1973, AIP, 147 (1973).
10. V. Barteney et al., Phys. Rev. Lett. 31, 1369 (1973).
11. J. W. Chapman et al., Phys. Rev. Lett. 32, 257 (1974).
12. J. Whitmore et al., Abstract #48, Amer. Phys. Soc. DPF Meeting, Berkeley (1973)

E-221
pp inelastic
SCATTERING

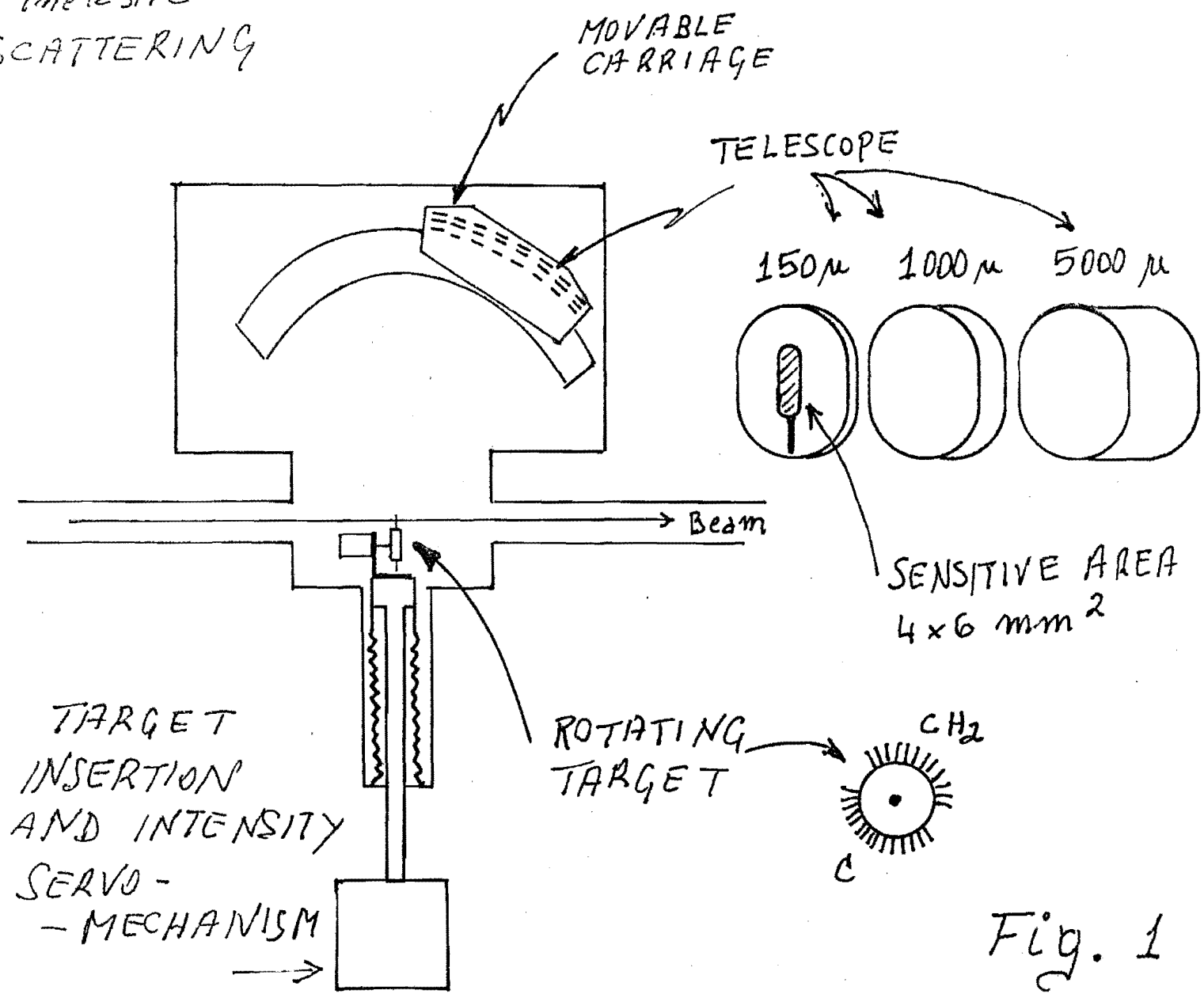

Fig. 1

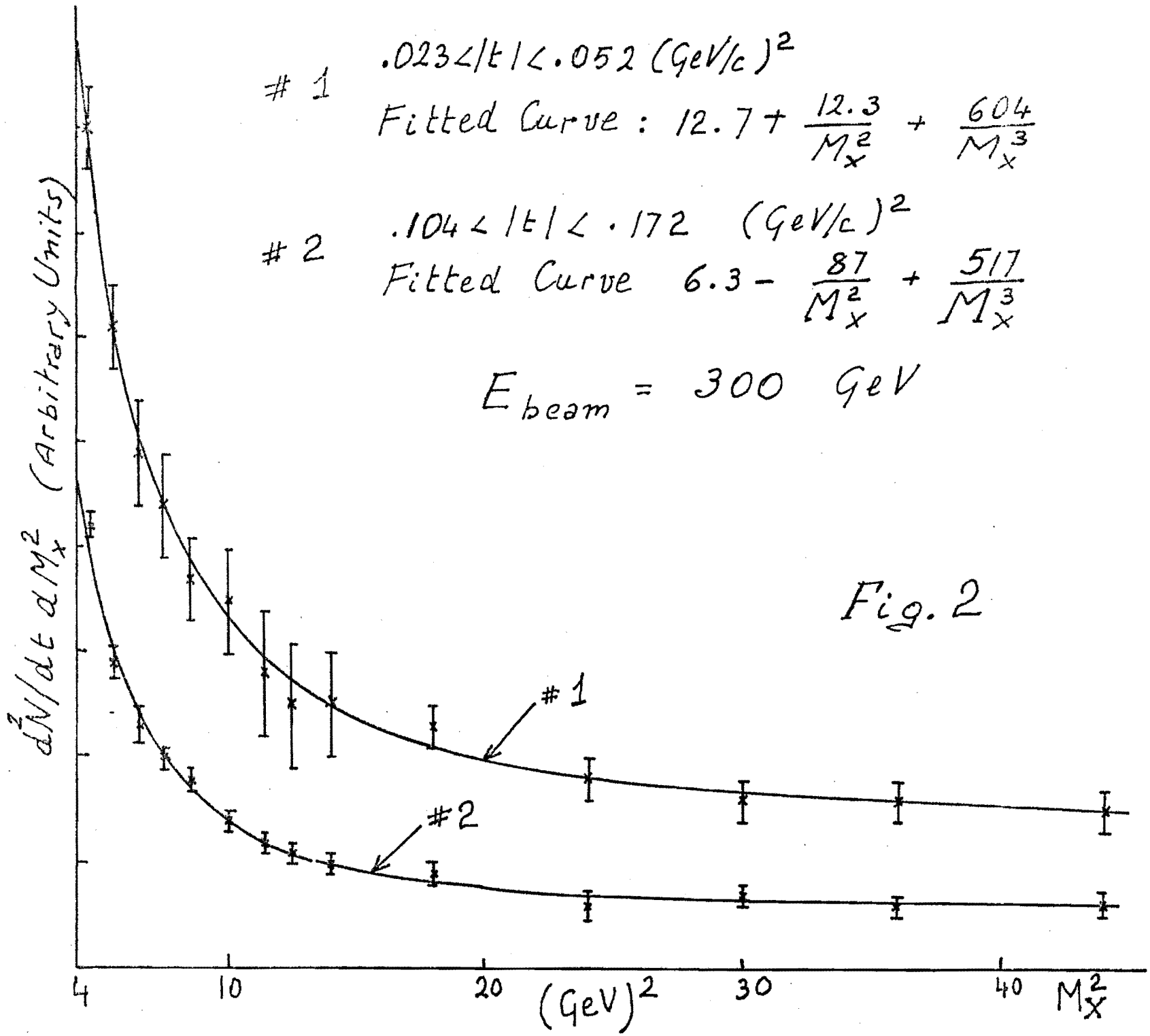
#1
.023<|t|<.052 (GeV/c)^2
Fitted Curve : $12.7 + \frac{12.3}{M_x^2} + \frac{604}{M_x^3}$
#2
.104<|t|<.172 (GeV/c)^2
Fitted Curve $6.3 - \frac{87}{M_x^2} + \frac{517}{M_x^3}$
E_{beam} = 300 GeV
$d^2N/dt\,dM_x^2$ (Arbitrary Units)
#1
#2
4
10
20
30
40
(GeV)^2
M_x^2

Fig. 2

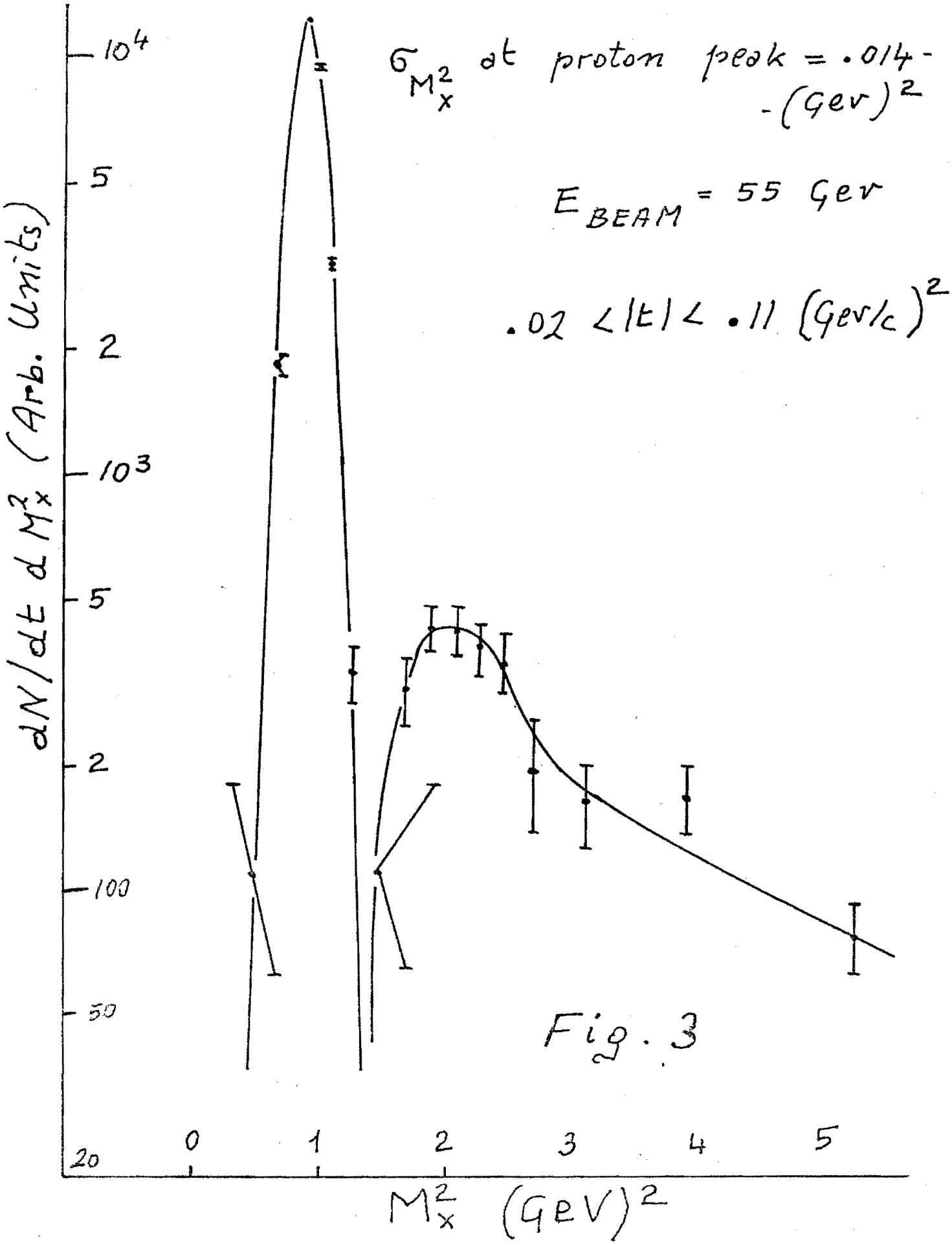
$\sigma_{M_x^2}$ at proton peak = .014 - (Gev)^2
E_{BEAM} = 55 Gev
.02 < |t| < .11 (Gev/c)^2
10^4
5
2
10^3
5
2
100
50
20
0
1
2
3
4
5
$dN/dt\, dM_x^2$ (Arb. Units)
M_x^2 (GeV)^2

Fig. 3

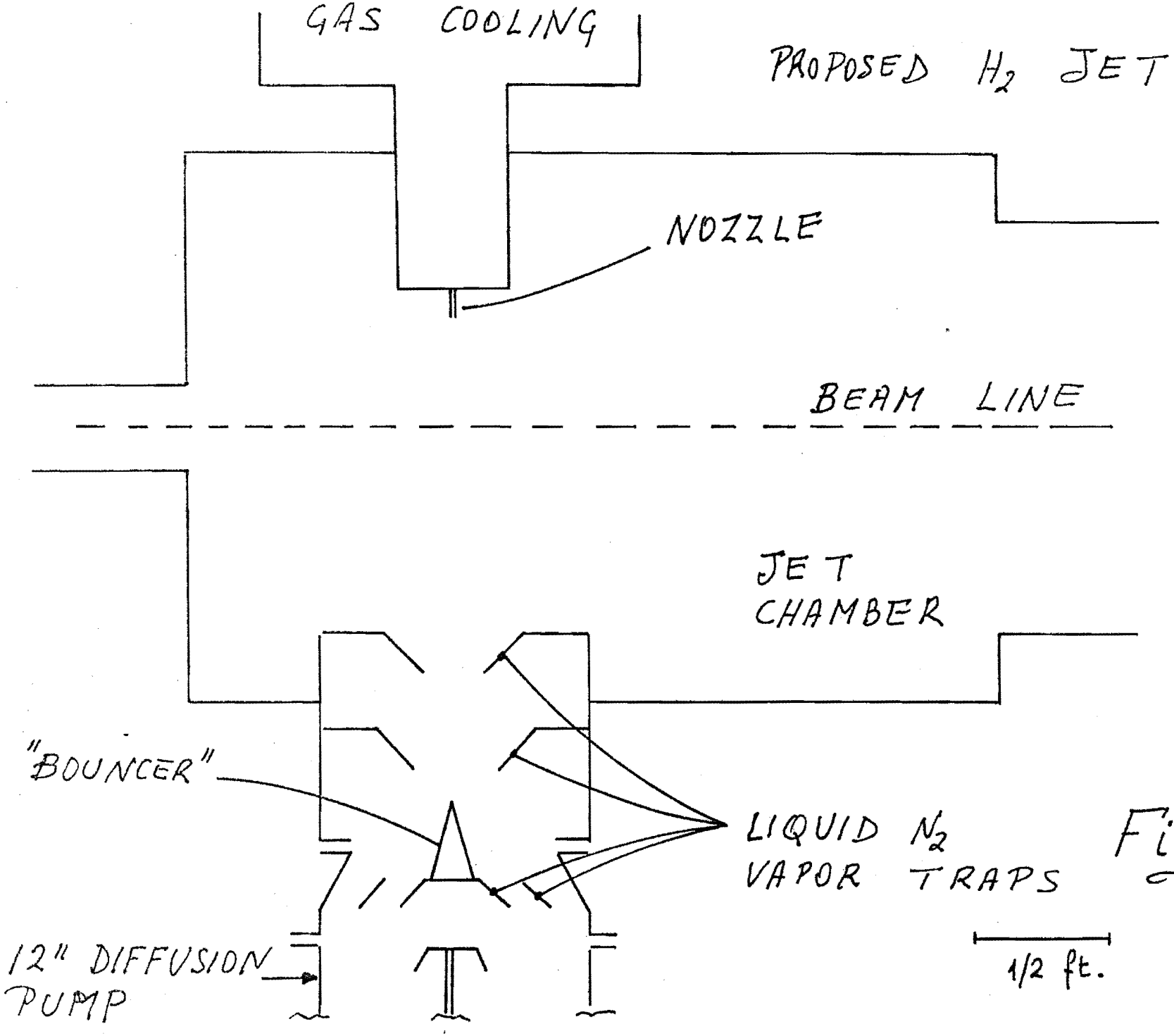
GAS COOLING
PROPOSED H_2 JET
NOZZLE
BEAM LINE
JET CHAMBER
"BOUNCER"
LIQUID N_2 VAPOR TRAPS
12" DIFFUSION PUMP
1/2 ft.

Fig. 4

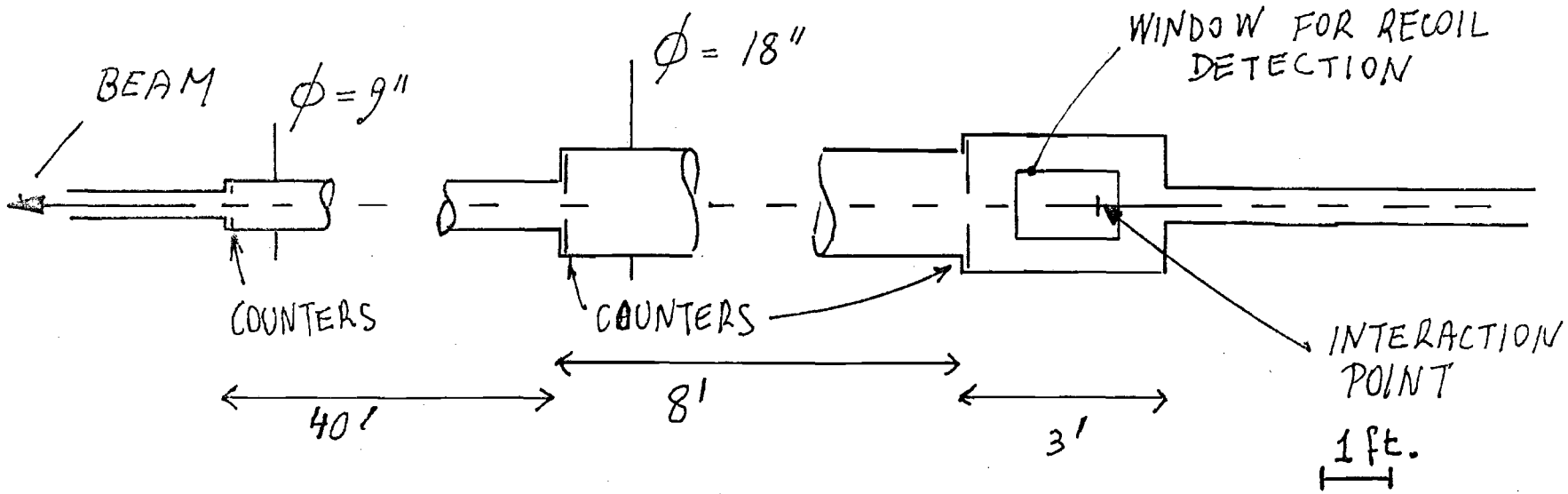

FORWARD HODOSCOPE ASSEMBLY

Fig. 5

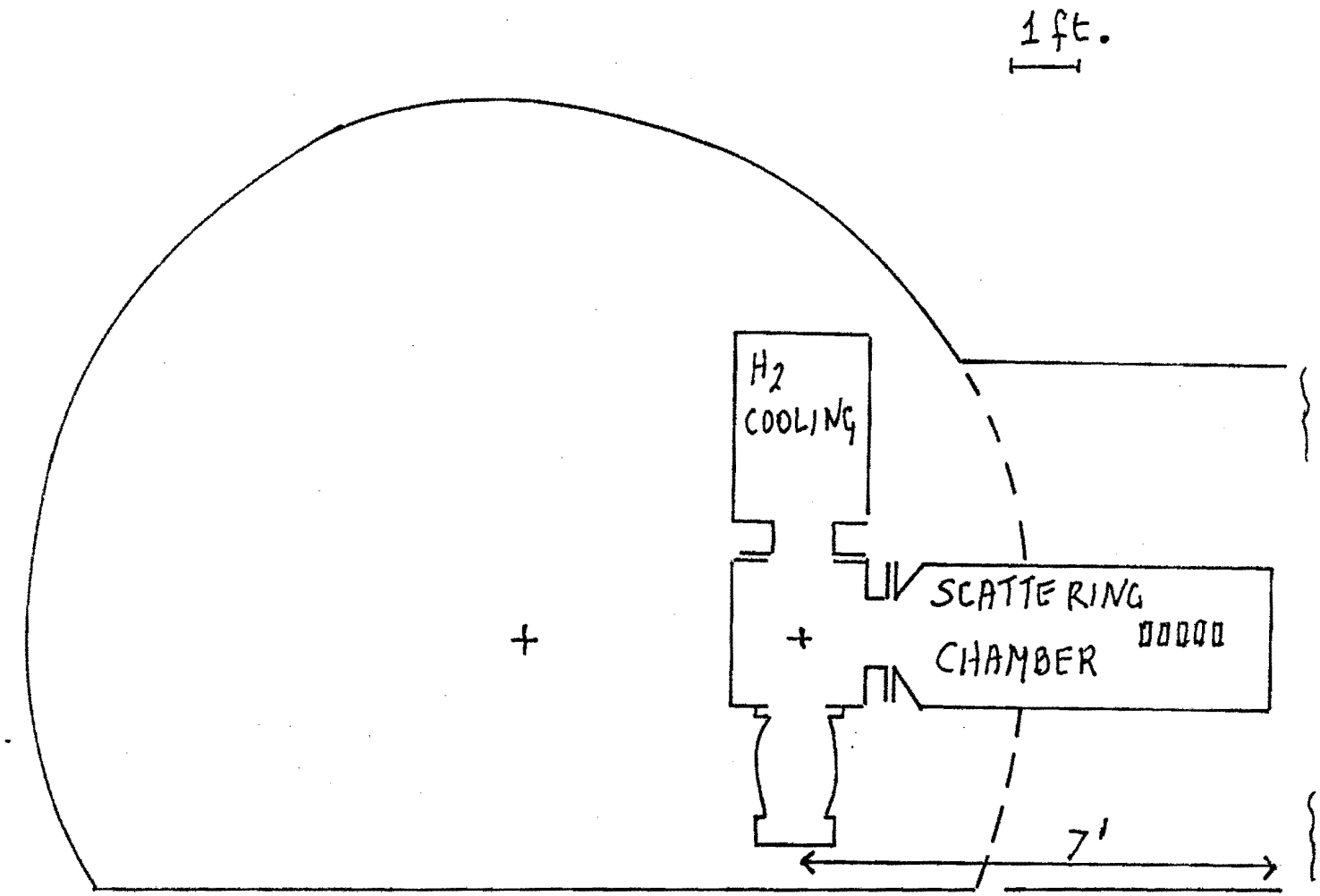

JET + SCATTERING CHAMBER

Fig. 6

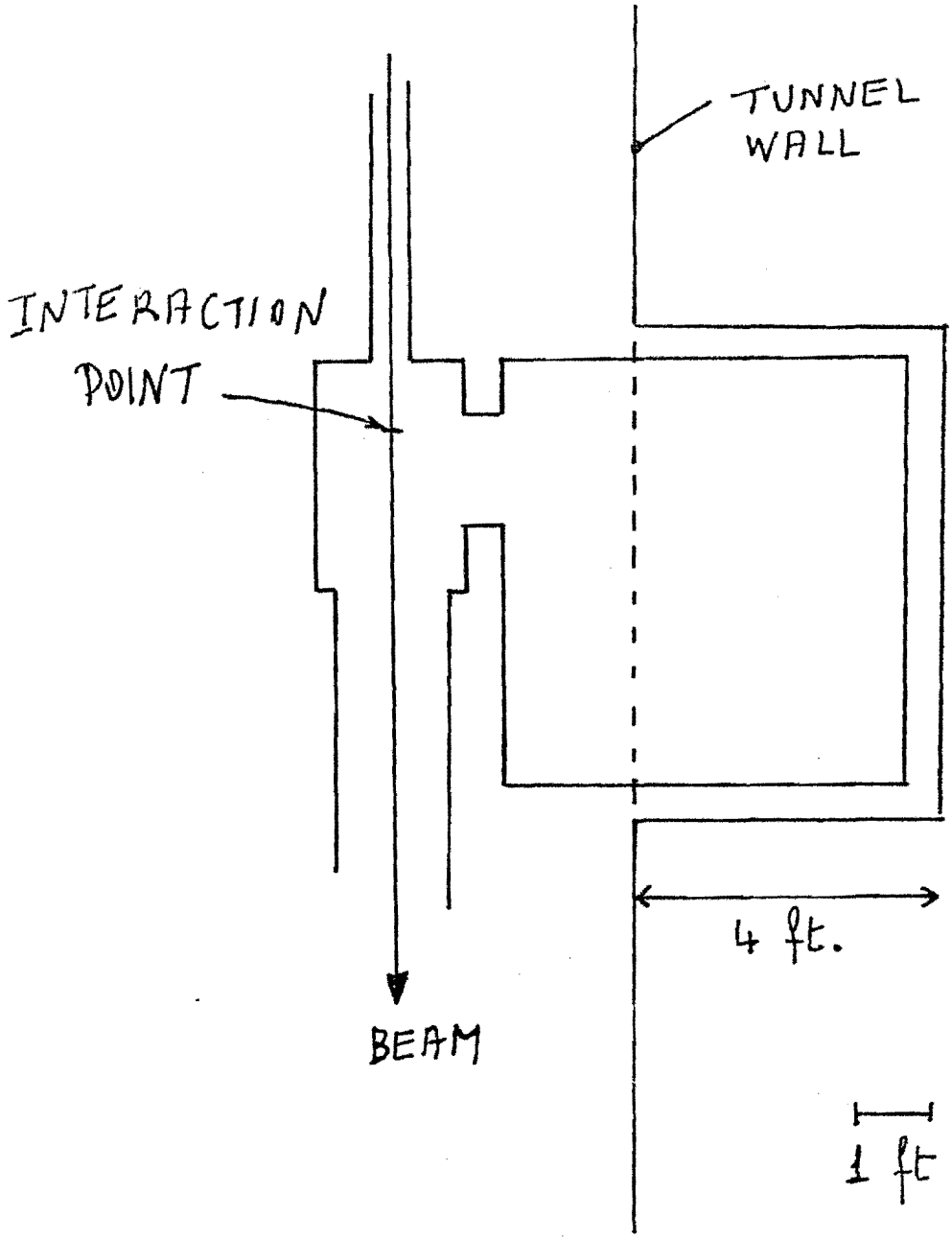

PLAN VIEW OF JET AND RECOIL CHAMBERS

Fig. 7

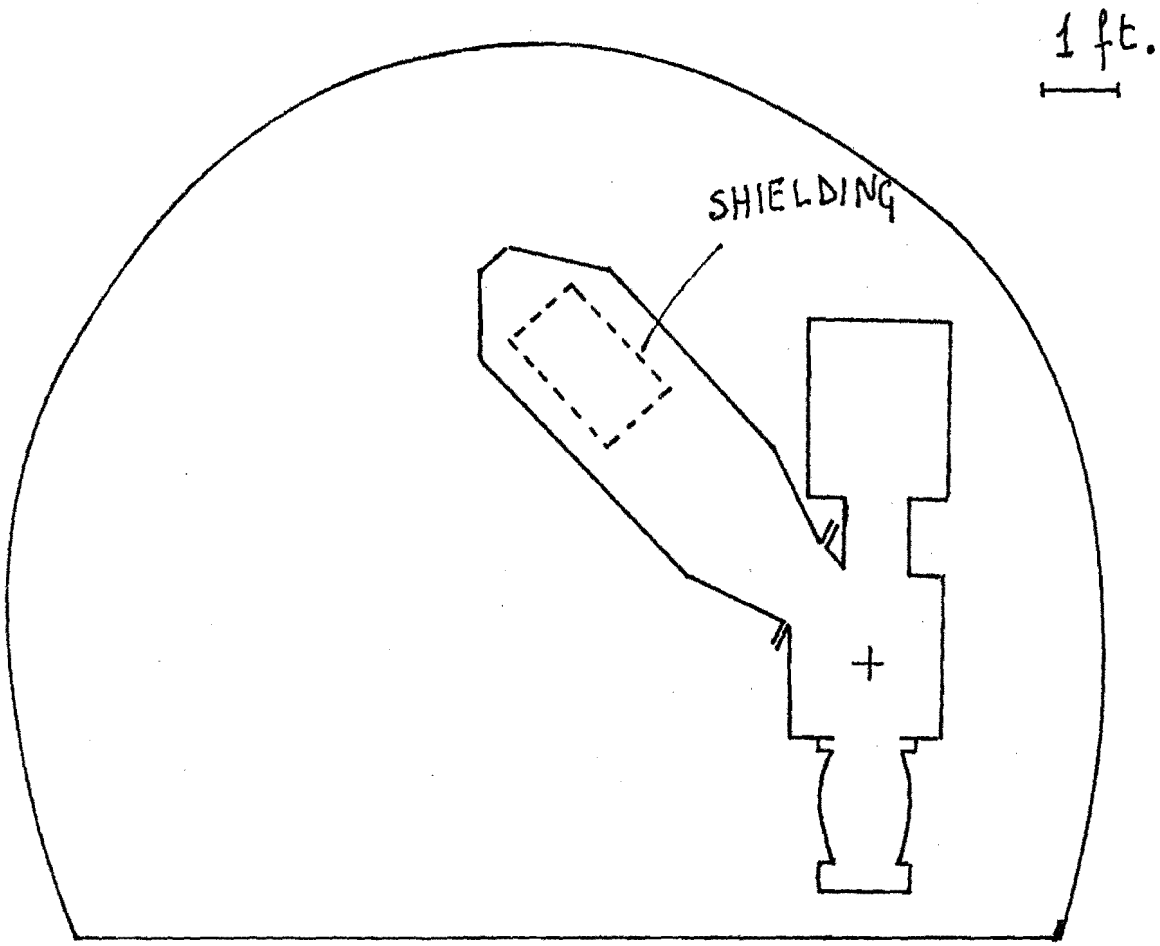

ALTERNATE JET + SCATTERING CHAMBER ASSEMBLY

Fig. 8