NAL Proposal No. 301

Spokesman: Marvin Gettner

Northeastern University
Boston, Mass. 02115
(617) 437-2938
May 1974

Measurements of Hadron-Hadron Elastic Scattering at Large Four-Momentum Transfer Squared

J. Hartman, J. Orear

Cornell University

S. Conetti, C. Hojvat, D. Stairs, J. Trischak

McGill University

J. Peoples, R. Rubinstein, and two others

National Accelerator Laboratory

W. Faissler, M. Gettner, D. Potter, M. Tautz

Northeastern University

I Summary

We propose to measure the hadron-hadron (πp, kp, $\bar{p}p$) elastic scattering t distribution with a cross section sensitivity of 10^{-35} cm^2/GeV^2. To reach these low cross sections, we propose to use a relatively large acceptance double arm magnetic spectrometer in a high intensity hadron beam ($> 10^8$ π's/pulse). The spectrometer system is similar to the one being used for the large t pp experiment (E-177). The first and primary objective will be to obtain the s and t dependence for π^-p elastic scattering for $s > 100$ GeV^2 and $t > 2$ GeV^2. The maximum s and t limits will be set by the actual behavior of the cross section. However model dependent predictions, discussed in the next section, indicate a maximum $|t|$ of between 5 and 15 GeV^2 at values of incident momenta greater than 50 GeV/c, while a pessimistic extrapolation of the existing data would place the limits at $t \approx -5$ GeV^2 at about 100 GeV/c.

To determine the behavior of the π^-p elastic cross section to a t value corresponding to a $d\sigma/dt$ of $\sim 10^{-35}$ cm^2/GeV^2 at each of two values of s would require 800 hours of data taking time. 200 hours of testing would be required.

II Physics Justification

The measurement of deep elastic scattering of hadrons at large s and t provide data to study the strong interaction at small distances. Presently the most extensive elastic scattering data exist for pp scattering, where the ISR has made significant contributions at large s. Shortly NAL data from E177 will contribute at large s and t. No such extensive data exists for πp elastic scattering. However, with the high intensity π beams (10^8 - 10^{10} π's/pulse) on the horizon for NAL*, exploration of the large $|t|$ region (2 - 10 GeV^2)

*B. Cox, private communication. This proposal is intended for the new 0° high intensity secondary beams to be produced from the external proton beam in the proton area.

becomes feasible. The experiment we propose will be sensitive to cross sections of about 10^{-35} cm^2/GeV^2 (at 10^9 π's/pulse). We envisage starting the experiment by measuring π^- cross sections as this is technically the simplest. In later stages, other measurements (π^+p, pp, Kp, $\bar{p}p$) would be attempted.

The ISR[1] results on pp scattering showed sharp structures in the proton's t distribution and also showed that for $|t| < 4$ GeV^2 and $s > 1000$ GeV^2 the cross section is independent of s.

In this range of s and t the general trend of the data seem to follow the predictions of the Chou and Yang model[2,3,4]. Basic to the model are the ideas that 1) the distribution of hadronic matter is described by the electromagnetic form factors 2) large angle hadron-hadron elastic scattering t distributions are given by the product of hadron form factors and 3) at high energies the t distribution are independent of the incident beam energy. Thus $d\sigma/dt)_{pp} \sim G_p^4(t)$ and $d\sigma/dt)_{\pi p} \sim G_p^2(t)\ F_\pi^2(t)$ where G_p and F_π are the proton and pion form factors. For large $|t|$, $G_p \sim t^{-2}$ (dipole form factor). $F_\pi(t)$, seems to go as t^{-1} (simple pole) for small t while the large t behavior is not known. $F_\pi(t)$, for small t is deduced from pion electroproduction data.

To estimate the range of the πp cross section that may be encountered in this experiment we use the predictions of the Chou Wang model[2] as applied to πp scattering by Moreno and Suaya[4]. Their predictions, made by assuming either a simple pole or dipole pion form factor are shown in Figure 1. Their curves show for $|t| < 2$ GeV^2 the predictions for the two types of form factors are similar. Large differences in the expected cross sections appear in the t range from -3 to -6 GeV^2. This emphasizes the importance of obtaining data in this t range. From their results, it is also seen that the cross section sensitivity of this experiment of 10^{-35} cm^2/GeV^2 is sufficient to observe the dipole form factor behavior in this t range.

The current status of large t ($|t| > 1$ GeV^2) data is shown in Figs. 2, 3, taken from the report of a Cornell, BNL, NU[5] πp elastic scattering experiment. This experiment, at incident momenta of 13.8 GeV/c and 22.6 GeV/c, measured the πp cross section at the largest values of s and t presently known. The data show a tendency for the s dependence of $d\sigma/dt$ at fixed t to be leveling off for $|t| < 3$ GeV^2 and an $s^{-3.5}$ dependence for $3 < |t| < 5$ GeV^2. Representative points from 22.6 GeV/c Cornell, BNL, and NU data are shown on Fig. 1 along with the Moreno-Suaya[4] prediction. Several possible conclusions can be drawn:

(a) The pion, unlike the nucleons, has a simple pole form factor and the 22.6 GeV/c data are at or near the asymptotic values. In this case, this experiment should be able to obtain data at the highest momentum π beam available at NAL and out to a t of about -15 GeV^2.

(b) The pion has a dipole form factor like the nucleons and the 22.6 GeV/c data are not near the asymptotic value. In this case, this experiment should be able to confirm the dipole behavior out to a t of -6 GeV^2 and determine s dependence between 22.6 GeV/c and at least 300 GeV/c.

(c) Neither of the above and the data and/or theory behave differently than expected. In this case to get some idea of the minimal s and t limits this experiment can reach with its cross section sensitivty of 10^{-35} cm^2/GeV^2, we make the pessimistic assumption that the data continue the $s^{-3.5}$ dependence for $|t| > 3$ GeV^2. We then perhaps could go to a t of -5 GeV^2 at about 100 GeV/c incident momentum and out to a t of -10 GeV^2 at 50 GeV/c.

Whichever case the future πp data support, tracing out its s and t dependence down to a cross section of 10^{-35} cm^2/GeV^2 will undoubtedly make an important contribution to the understanding of hadron physics.

III Experimental Methods

A. Apparatus

We propose to use the same method of measuring πp elastic scattering as described in the E177 proposal to measure pp elastic scattering. Both scattered particles will be measured after magnetic analysis using proportional chambers. The apparatus configuration is shown in Figs. 4-8 and system parameters are given in Tables I and II.

This apparatus is well suited to elastic scattering measurements at high beam intensities for several reasons. First, the use of magnets for both scattered particles considerably reduces the number of particles which can reach the detectors directly from the target. Secondly, the relatively large acceptance in t permits the collection of data points simultaneously over a large t range. This reduces the chance of missing structure in the t distribution and eliminates the systematic errors which can arise if points are taken separately. Also, the t resolution is excellent, $\Delta t < .1$ GeV^2, which statistic permitting, would show dip structure in the t distribution with good detail. Finally, the kinematical focussing in the slow particle spectrometer has two advantages. First, the horizontal dimensions of the proportional chambers and trigger counters are kept reasonably small for such large t acceptance. This results because the larger angle protons have less momentum and thus are deflected more so that after the magnets the rays are not as strongly divergent. Also, the background from inelastic reactions is substantially reduced by placing small trigger counters at the positions where the elastic rays cross over. (See Fig. 5).

The two arm spectrometer system measures the momenta and angles of both scattered particles. This provides sufficient information to determine

the elastic scattering events (1-C fit) even though beam momentum and direction measurements are not made. To separate the elastic events from the inelastic background, the particles detected will be tested for coplanarity, transverse momentum balance, and equality of their four momentum transfer squared (t). The experimental resolutions,discussed below, are sufficient to keep the background contamination of the elastic events to less than a few percent.

We initially plan to take data at incident momenta of 50 and 200 GeV/c covering the t range of about -2 to -8 GeV^2. The t- acceptance is such that this t range is covered in two runs, $2 < |t| < 4$ GeV^2 and $4 < |t| < 8$ GeV^2. These runs differ only in the position of the target and the lateral position of the fast particle spectrometer components. The choice of -2 GeV^2 is probably a conservative one for the lower limit to the t range and represents an estimate of the largest value of $|t|$ that the present NAL πp scattering experiments will reach. We would ultimately choose the starting point of the $|t|$ range to just overlap their largest value.

The slow particle spectrometer (Fig. 4,5) has two BM 109 magnets and their positions are identical for all measurements. The first BM 109 is the same one used in the E177 pp experiment and has a special beam hole drilled through the yoke so that it can be placed close to the beam line. The second BM 109 replaces an 18D32 of the pp experiment. A longer magnet is needed in order to better determine the slow particle momentum at large t. It is this improved momentum resolution which will allow this apparatus to work with a large $\Delta p/p$ in the incident beam.

For the 50 and 200 GeV/c measurements different sets of magnets may be necessary in the forward particle spectrometer. The 200 GeV/c configuration (Fig. 6,7) uses the same magnets as those in E177. It is also suitable for higher beam momenta.

The measurement at 50 GeV/c presents a problem with the magnets. At this momentum the spread in the forward particles production angle is larger than at 200 GeV/c. In order to preserve the advantages of the large t acceptance, the first magnet is brought closer to the target. The rays emerging from this magnet are too divergent to be accommodated by the EPB magnet. There are several possible ways of dealing with this difficulty. First, the wide t acceptance can be reduced by using EPB magnets and the desired t interval covered in more than two runs. Secondly, an 18D32 can be modified to allow the beam to pass through the yoke or a special magnet with the necessary dimensions (12" H x 2" W x 72" L) could be constructed. Third, because of the lower momentum, it may be that detailed Monte Carlo studies would show no second magnet necessary. Although this would degrade the resolution by about a factor of four, this may be tolerable. The fourth possibility is to use an additional BM 109 which will provide both good resolution and large acceptance. Fig. 6,8 show this possibility. In this application the vertical gap of the BM 109 need only be about 3" and thus the magnet can be seen at reduced power.

B. Resolutions

The lower energy particle spectrometer determines both the momentum and direction of the slow particle. A momentum resolution of about $\pm$ 1% and an angular resolution of about $\pm$ 5 mr are expected, based on a spacial resolution of the proportional chambers of $\pm$ 0.02". From the momentum determination of the slow particle the t of the reaction can be found to better than $\pm$ .1 GeV^2, independent of the value of beam momentum and divergence.

The direction and momentum of the forward particle are found from the position of the interaction point (determined by the horizontal extent of the incident beam) and from the position and direction of the particle emerging

from the forward spectrometer magnets. A horizontal beam size of $\pm$ .1" and a proportional chamber resolution of $\pm$ .02" result in a momentum resolution of $\pm$ 1% at 200 GeV/c and an angular resolution of $\pm$ .5 mr.* This leads to a t determination in the fast particle spectrometer to better than $\pm$ .5 GeV^2. Elastic events will be required to have the t determination from each spectrometer arm to agree to within $\pm$ .5 GeV^2. This requirement does not depend on knowledge of the beam momentum and thus a large spread in beam momentum can be accepted.

Cerenkov counters will be required for particle identification. These will be placed in the fast arm. The apparatus diagrams show only one cerenkov counter between the proportional chambers. If necessary, additional stages can be added after the last proportional chamber.

C. Beam Requirements

The beam requirements for this experiment are:

1) High Intensity Flux. ($> 10^8$ π's/pulse) The cross section sensitivity of this experiment is determined by the incident flux. Our minimal goal is to reach a cross section of $\sim 10^{-35}$ cm^2/GeV^2 in a Δt bite of 1 GeV^2. This cross section is two orders of magnitude lower than previously measured πp values. At a flux of 10^8 π's, we would expect about two counts at 10^{-35} cm^2/GeV^2 on a 300 hour data run.

2) Horinzontal size and divergence ($\pm$ .1" and $\pm$ .5 mr) To determine the fast particle momentum it is desirable to have a minimal horizontal spot size. A spot of .2" (full width) would be adequate. The horizontal beam divergence

---

*This angular resolution applies only to elastic events. To reduce the effect of the horizontal beam divergence on the determination of the fast particle's production angle, transverse momentum conservation is used. Applying this condition to elastic events permits the determination of the horizontal beam divergence and hence the determination of the production angle. For the inelastic events, this condition will result in rejecting those inelastic events which yield a divergence larger than the maximum amount determined from the elastic events.

is not very critical, it should be much less than the minimal production angle of 7 mr ($t = -2$ GeV^2 at 200 GeV/c). A divergence of $\sim \pm .5$ mr is adequate.

3) Vertical size and divergence ($\pm$ .2", $\pm$ .3 mr). The vertical beam spot size should be matched to the vertical acceptance of the forward particle spectrometer. This is determined by the .8" vertical gap of its first magnet. A vertical beam spot size of $\pm$ .2" would be acceptable. The vertical beam divergence is the major contribution to the apparent lack of coplanarity in the reconstructed elastic events. The spread in non-coplanarity for the elastic events should be small compared to the system's coplanarity acceptance. In this case, the coplanarity histograms display the entire elastic peak sitting upon the inelastic background. The width of the elastic peak is primarily determined by the vertical beam divergence. With a vertical beam divergence of $\pm$ .3 mr, the full width of the elastic peak is expected to be between 1/2 and 1/5 of the coplanarity acceptance. The most stringent requirement on the vertical divergence comes from the low t runs at the higher beam momentum. Since the cross section is larger at lower t values it may be possible to sacrifice some incident flux in order to achieve the necessary beam divergence.

D. Event Rate and Run Plan

The event rate, N, is given by:

$$N = N_\pi \, N_H \, \frac{d\sigma}{dt} \, \Delta t \, \frac{\Delta\varphi}{2\pi}$$

where $N_\pi = 2.7 \times 10^{14}$ π's (10^9 π's per pulse for 300 hrs)

$N_H = 8.4 \times 10^{23}$ target protons for a 8" long hydrogen target

$\frac{\Delta\varphi}{2\pi} = .0085$ ($\Delta\varphi = \pm 1.5^{o}$)

For $d\sigma/dt$ of 10^{-35} cm^2/GeV^2 and $\Delta t = 1$ GeV^2 we expect 18 events for 300 hours of data taking.

Event estimates for other cross sections are shown in Table II.

Table III

	-t	Δt bite	$\frac{d\sigma}{dt}$	Length of Run	Number of Events
Low t run	2 GeV	$\pm$ .05 GeV^2	10^{-31} cm^2/GeV^2	100 hrs	6,000
	4	$\pm$ .1	10^{-33}	100	120
High t run	4	$\pm$ .1	10^{-33}	300	360
	t max	.1	10^{-35}	300	18

Based on these estimates, we would plan on 400 hours of data taking at each value of incident momentum; 100 hours of low t and 300 at high t. Thus the 50 and 200 GeV/c data would be obtained in a total of 800 hours.

E. Backgrounds

The backgrounds expected to be encountered in this experiment are similar to those in the pp experiment (E177).

However, in this experiment the incident beam intensity will be a factor of 10^2 - 10^3 lower and thus those backgrounds which are intensity dependent (neutron production and random coincidences in the detectors) will be considerably reduced. There are four classes of backgrounds which are discussed at length in the E177 proposal. This discussion is briefly

summarized here and where necessary modified to special features of the πp experiment. The kinds of backgrounds are: (1) backgrounds from polefaces and collimator edges (2) true coincidences of two particles produced in the same target interaction (inelastic background) (3) accidental coincidences of single particles produced in two separate target interactions (single arm background) (4) general room background (slow neutrons).

1. Collimator and Pole Face Backgrounds.

This is likely to be the largest source of non-elastic backgrounds. The single arm rates as estimated for the 177 proposal and extrapolated to this experiment are expected to be less than 10^3 particles/pulse. The corresponding accidental trigger rate from this source is not large. The track resolution is such that we can tell whether or not a particle came from the target. The non-target backgrounds can be eliminated in the data analysis.

2. Inelastic Background

The inelastic process that most closely corresponds to the elastic kinematics is $\pi + p \rightarrow N^* + \pi$ followed by $N^{*+} \rightarrow p + \pi^o$. Based on Monte-Carlo calculations done for the pp experiment (πp studies are now in progress), we estimate 1/50 as the upper limit to the detection efficiency for this reaction compared to the elastic πp reaction. The apparatus' acceptances are centered on the elastic kinematics and thus inelastic events are not accepted with equal efficiency as the elastic events. This accounts for a factor of 1/5 in their overall relative detection efficiency. The remaining factor of 1/10 arises from the comparison of t as obtained separately from each arm. Since additional requirements of coplanarity and transverse momentum balance will also be imposed, 1/50 represents a conservative estimate of the relative detection efficiency. To estimate the inelastic contribution arising from the N^* production to the

elastic data, the relative detection efficiency must be weighted by their production cross sections. The ratio of the total elastic scattering cross sections to the total two prong inelastic cross section is close to unity. It does not seem unduly optimistic to take this as the upper limit to the ratio of the differential cross sections. Thus we expect the background under the elastic peak to be the order of 1% or less. In the case there should be a significant subtraction for inelastic background the $t_{fast} - t_{slow}$ and the coplanarity histograms not only display the intrinsic resolution curves, but permit a high statistics determination of the inelastic background.

3. Single Arm Rates

In the E177 proposal, the single arm rates were calculated on the basis of inclusive reactions $p + p \rightarrow p$ + anything. For the pp experiment, random coincidence rates of 1/week were calculated for the large t region ($10 < |t| < 20$ GeV^2). Since the πp and pp inclusive cross section are about the same and the apparatus acceptances are similar, these results can be extrapolated to the lower t range expected in the πp experiment. After adjusting for the lower beam intensity, a random coincidence rate of about 1/week is also found for the πp experiment. Whatever accidental we do encounter will be further reduced by the off-line analysis cuts.

4. Neutron Backgrounds

Estimates of the neutron flux produced by absorbing secondary particles in collimators and by the beam dump indicate rates of less than 10^3/pulse in the pp experiment. In the πp experiment the neutron flux should be two to three orders of magnitude lower as the beam will have less intensity.

IV NAL Requirements

We would hope that NAL will provide:

1. The magnets shown in Table I. Further consideration may indicate an alternative magnet to the BM 109 listed for the 50 GeV/c forward arm.
2. Hydrogen target 8" long and 1" in diameter.
3. Appropriate shielding and collimators.
4. Beam monitoring equipment.
5. Use of the CDC 6600 for fast processing of sample data.
6. Cerenkov counters for particle identification in the fast arm.
7. Appropriate electronics from Bison and Prep.

V. University Contributions.

We will supply the trigger detectors and proportional chambers interfaced to our own PDP11.

References

1. Results shown in invited paper by G. Giacomelli, XVI International Conference on High Energy Physics, Sept. 1972.
2. Chou and Yang, Phys. Rev. 170, 1591 (1968).
3. Durand and Lipes, Phys. Rev. Lett. 20, 637 (1968).
4. Moreno and Suaya, Slac Preprint, SLAC-PUB-1161 (TH), December 1972.
5. Cornellon, Grindhammer, Klems, Muzur, Orear, Peoples, Rubinstein, Faissler, Phys. Rev. Lett. 30, 403 (1973).

Figure Captions

Figure 1. Theoretical predictions for pion-nucleon elastic scattering. Curves A, D correspond to a dipole pion form factor, pion radii of .54 and 1f, and absortion coefficients 5.94 and 5.62 GeV^{-2} respectively. Curves C, B correspond to a simple pole pion form factor, pion radii .54 and 1f, and absorbtion coefficients 6.01 and 5.55 GeV^{-2}. The position of the zeroes depend on the form factor behavior, the radius and the absortion coefficient used.

Figure 2. $\pi^- p$ differential cross sections at various incident momenta. The 13.8 and 22.6 GeV/c are from reference 5, where reference to the other data are given.

Figure 3. Log $d\sigma/dt$ as a function of $\log_{10} s$ for several values of t. Data references are given in reference 5.

Figure 4. Apparatus arrangement for the slow arm. The slow arm magnet positions remain fixed for all data runs. The septum positions for the 50 GeV/c and 200 GeV/c runs are shown. Aperture defining collimators and trigger counters are not shown on this drawing.

Figure 5. Ray traces through the slow arm spectrometer system, showing the rays at high t and low t positions of the hydrogen target. Also shown are the cross over points where small trigger counters can be placed.

Figure 6. Magnet arrangements for the forward particle spectrometer at 50 and 200 GeV/c.Collimators, shielding, and trigger counters are not shown.

Figure 7. Ray traces through the fast arm spectrometer at 200 GeV/c. The dotted lines indicate the EPB positions at the low t range.

Figure 8. Ray traces through the fast arm spectrometer at 50 GeV/c. The dotted lines indicate the change in position of the septum magnet for the low t range. The BM109 shown, remains in a fixed position for both t ranges.

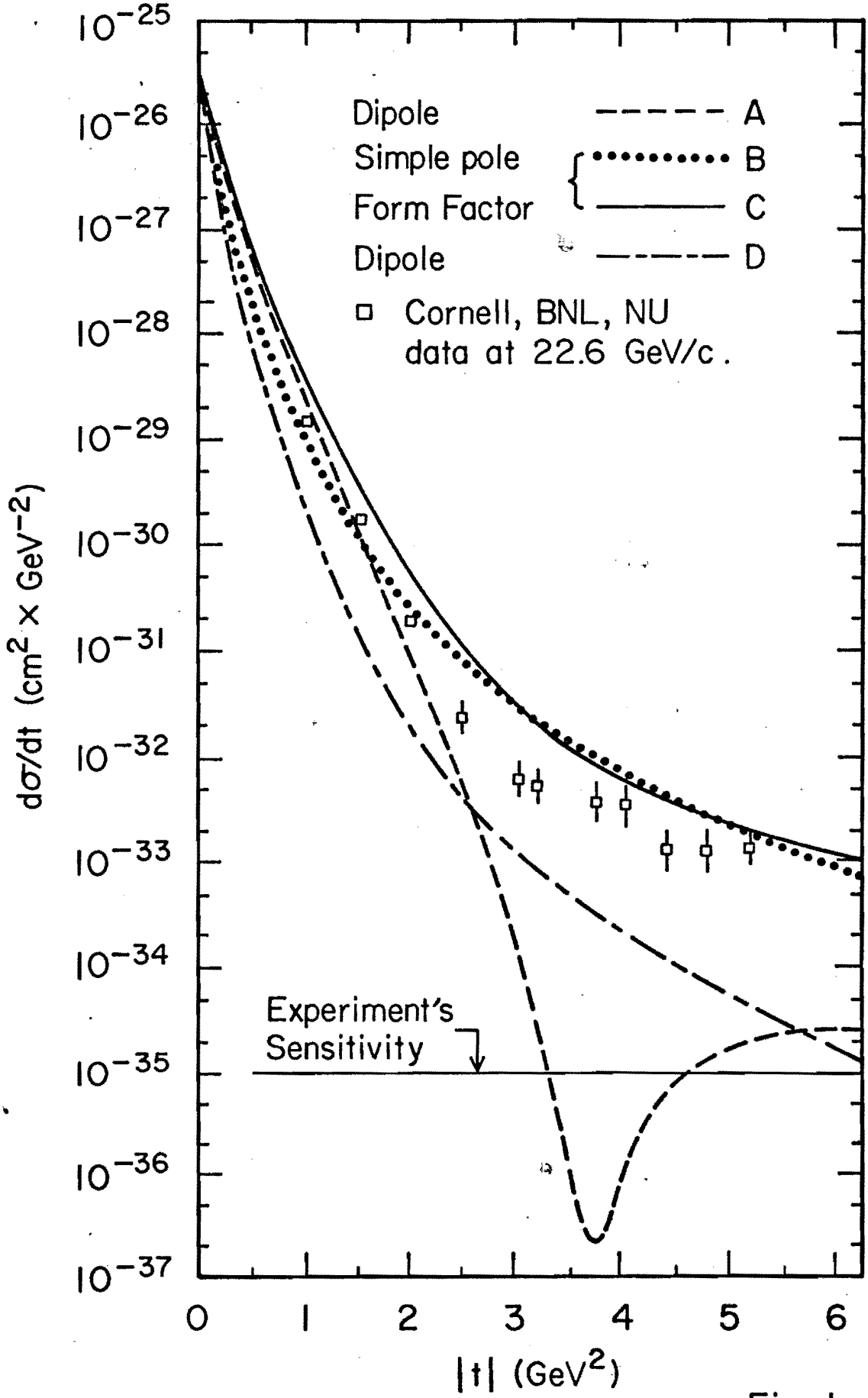
Dipole A
Simple pole B
Form Factor C
Dipole D
Cornell, BNL, NU data at 22.6 GeV/c.
Experiment's Sensitivity
dσ/dt (cm² × GeV⁻²)
|t| (GeV²)
10⁻²⁵
10⁻²⁶
10⁻²⁷
10⁻²⁸
10⁻²⁹
10⁻³⁰
10⁻³¹
10⁻³²
10⁻³³
10⁻³⁴
10⁻³⁵
10⁻³⁶
10⁻³⁷
0
1
2
3
4
5
6

Fig. 1

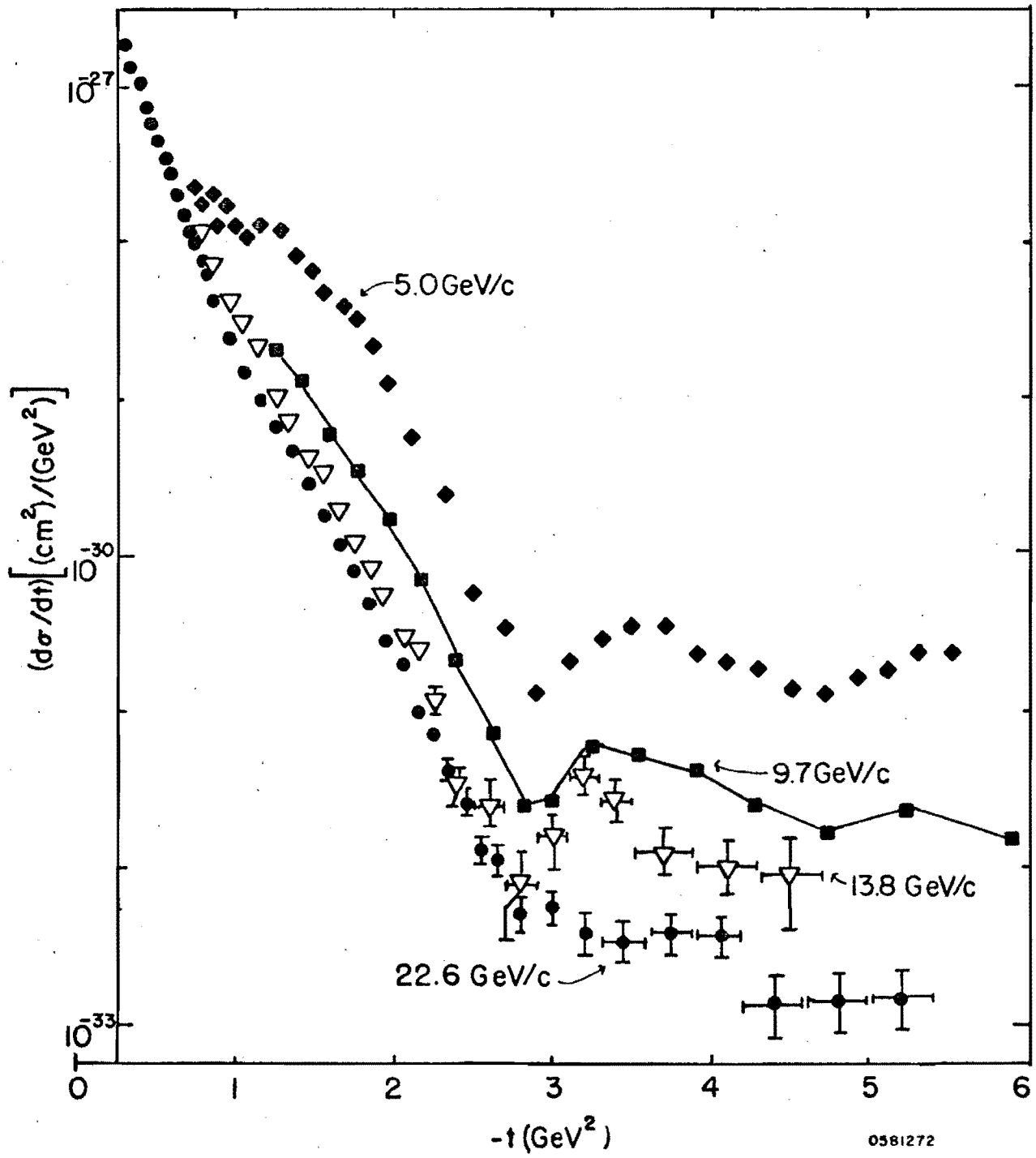
10^{-27}
10^{-30}
10^{-33}
$(d\sigma/dt)\left[(cm^2)/(GeV^2)\right]$
5.0 GeV/c
9.7 GeV/c
13.8 GeV/c
22.6 GeV/c
0
1
2
3
4
5
6
$-t\ (GeV^2)$
0581272

Fig. 2

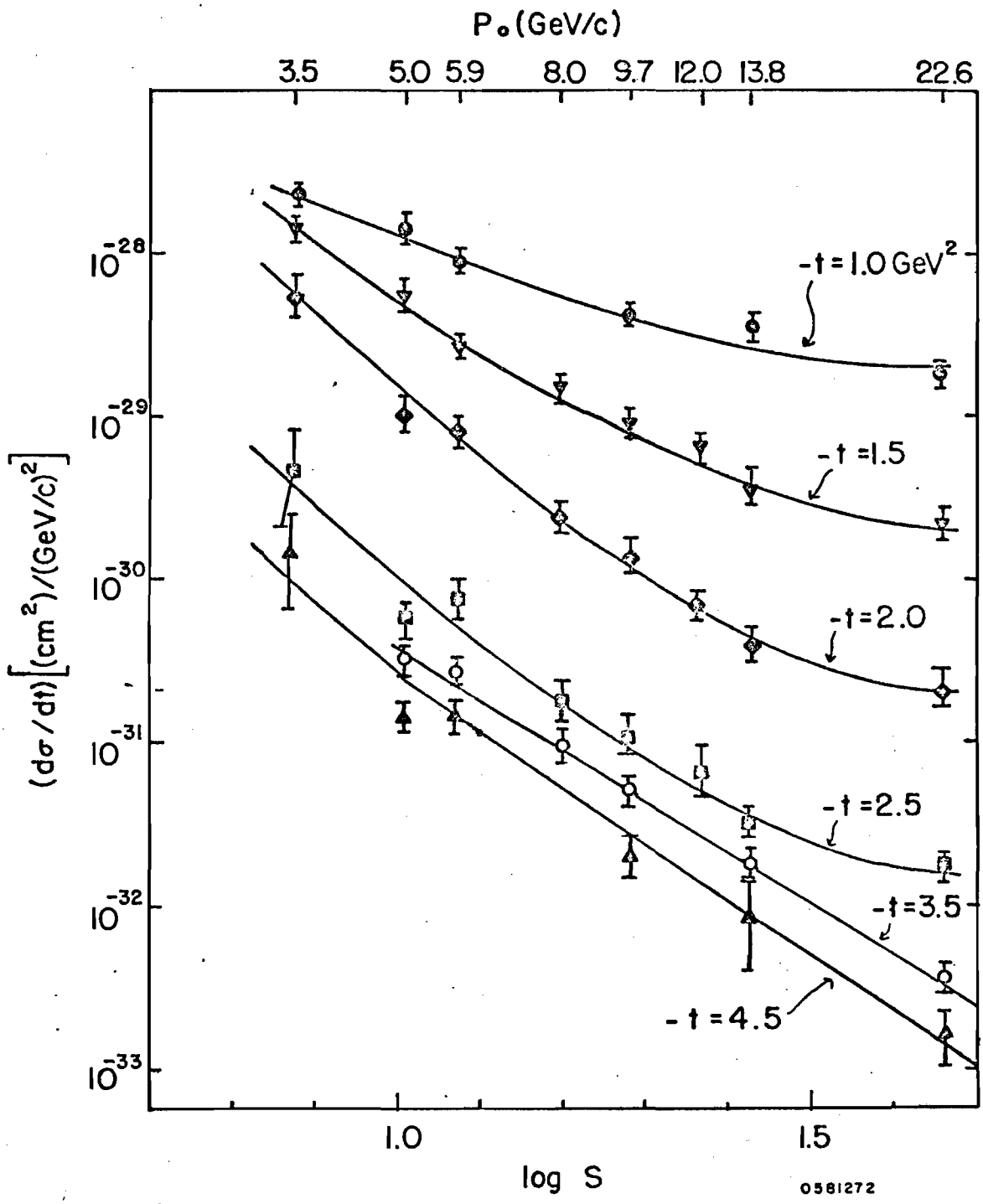
P₀(GeV/c)
3.5
5.0
5.9
8.0
9.7
12.0
13.8
22.6
10^{-28}
10^{-29}
10^{-30}
10^{-31}
10^{-32}
10^{-33}
$(d\sigma/dt)\left[(cm^2)/(GeV/c)^2\right]$
-t = 1.0 GeV²
-t = 1.5
-t = 2.0
-t = 2.5
-t = 3.5
-t = 4.5
1.0
1.5
log S
0581272

Fig. 3

SLOW ARM

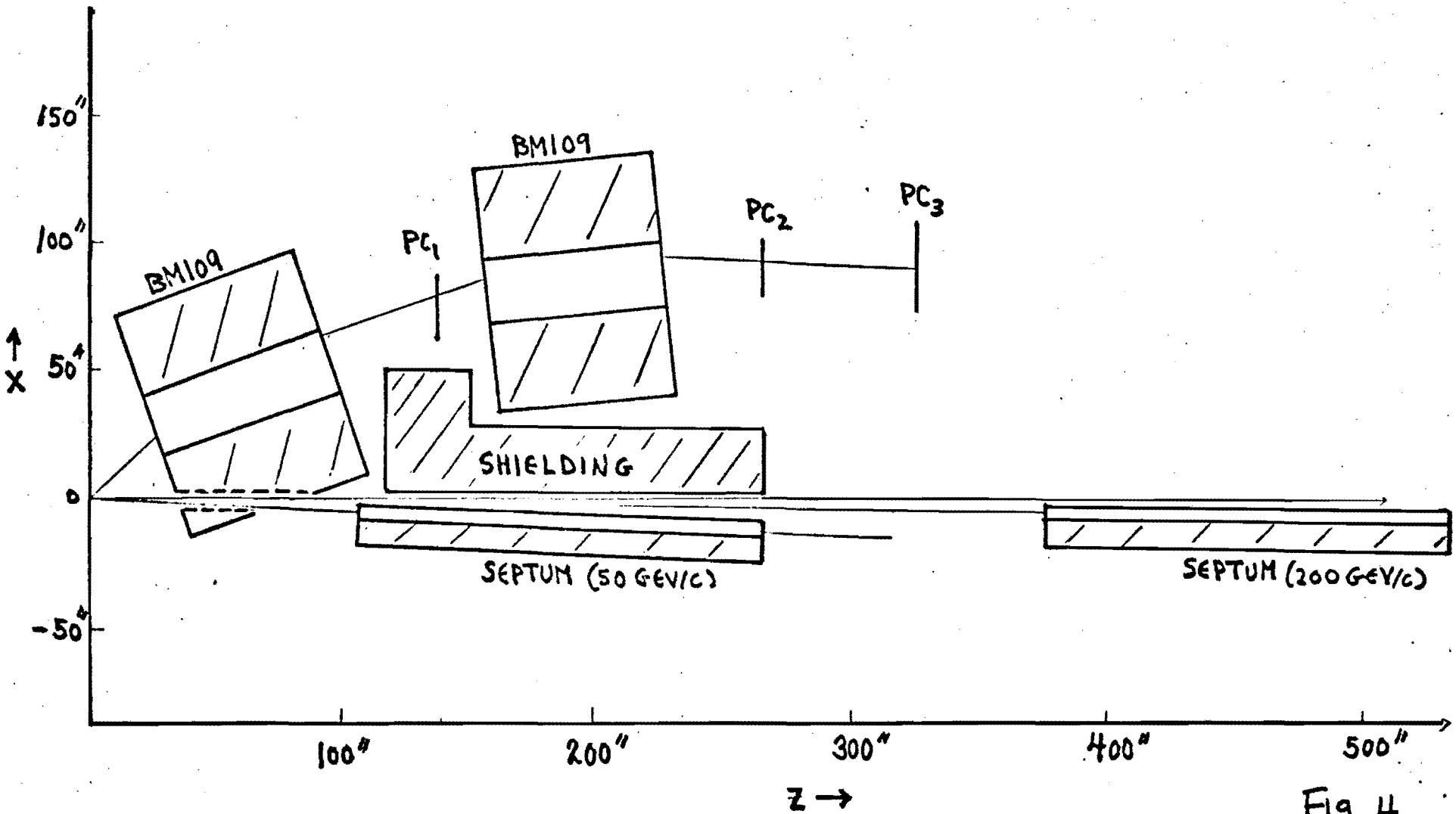

Fig. 4

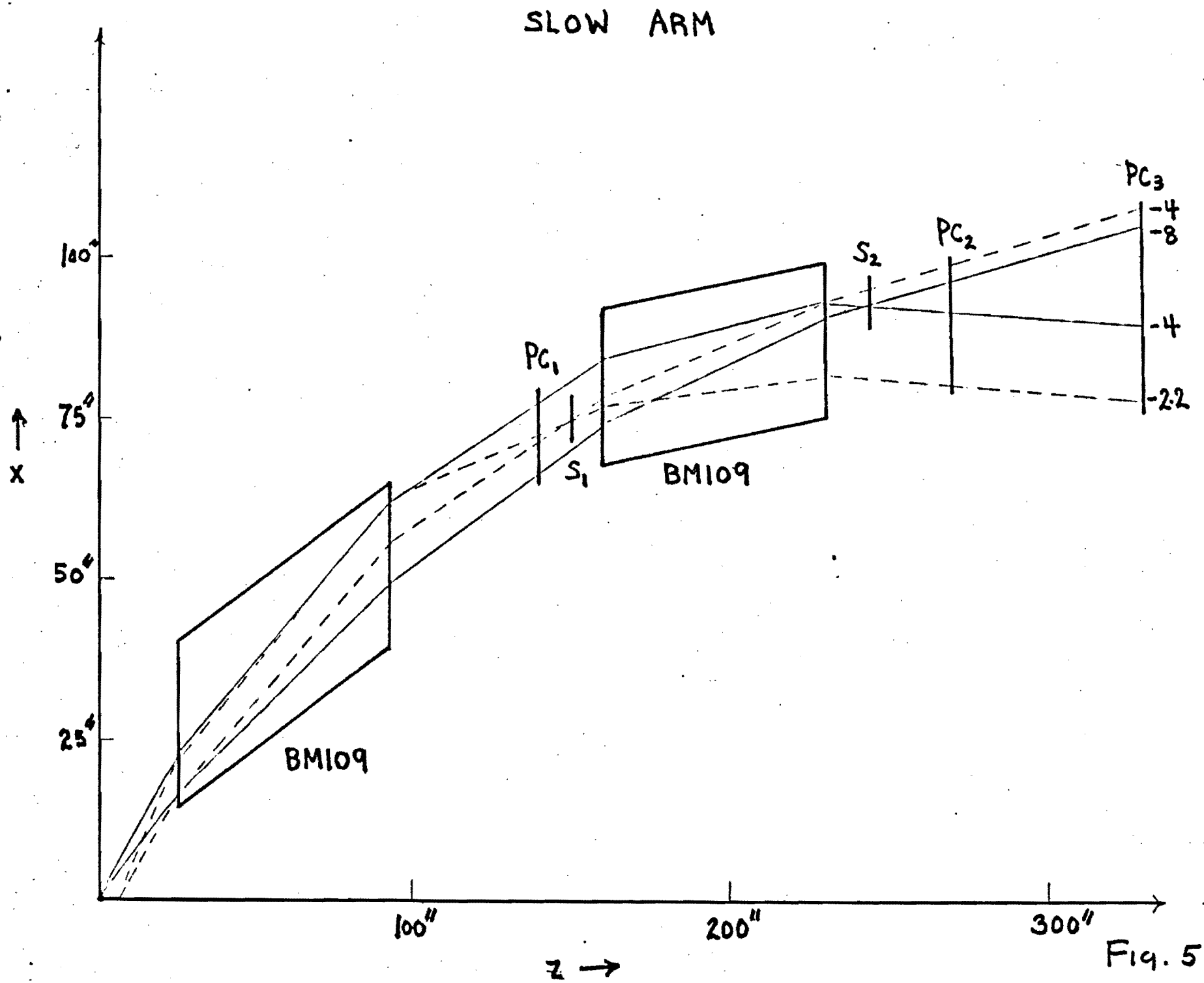
SLOW ARM
100"
75"
50"
25"
X
BM109
BM109
PC1
S1
S2
PC2
PC3
-4
-8
-4
-2.2
100"
200"
300"
Z

Fig. 5

FAST ARM

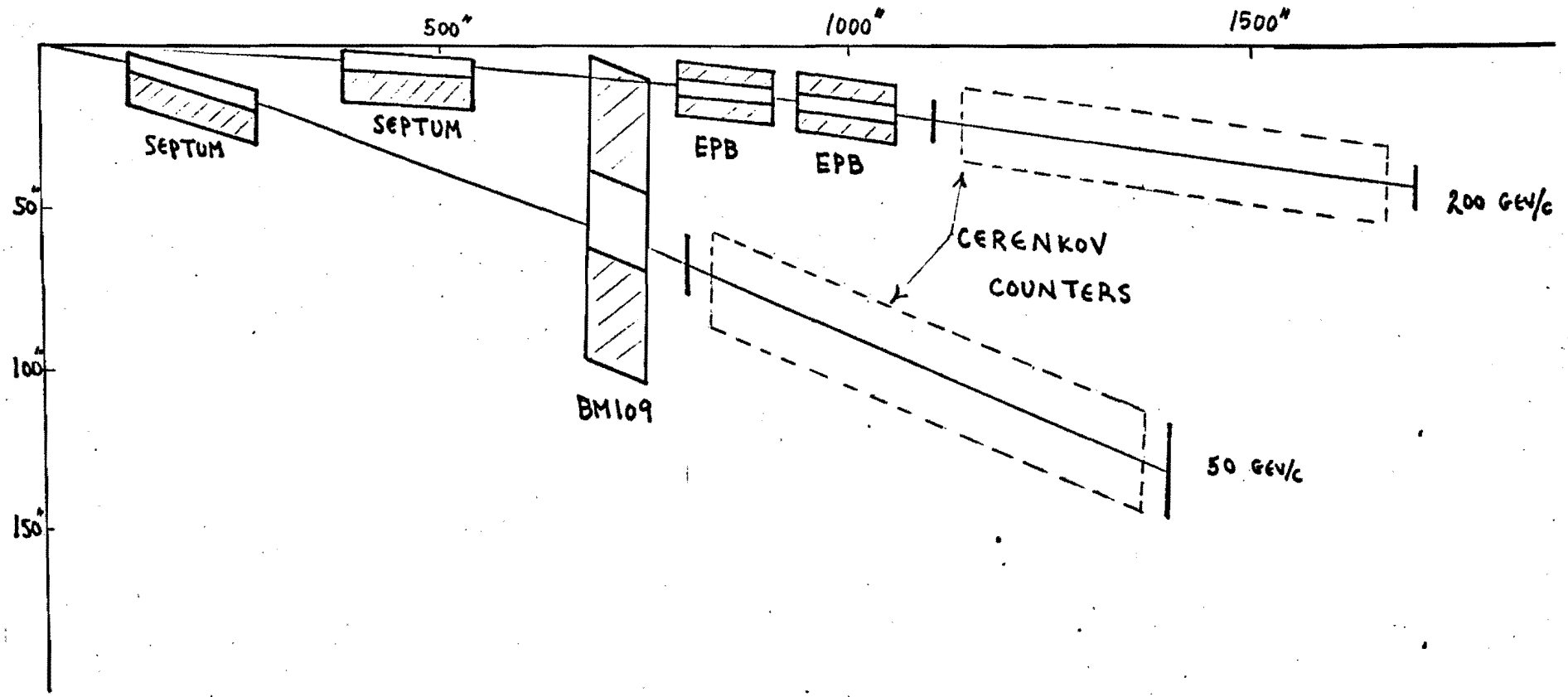

Fig. 6

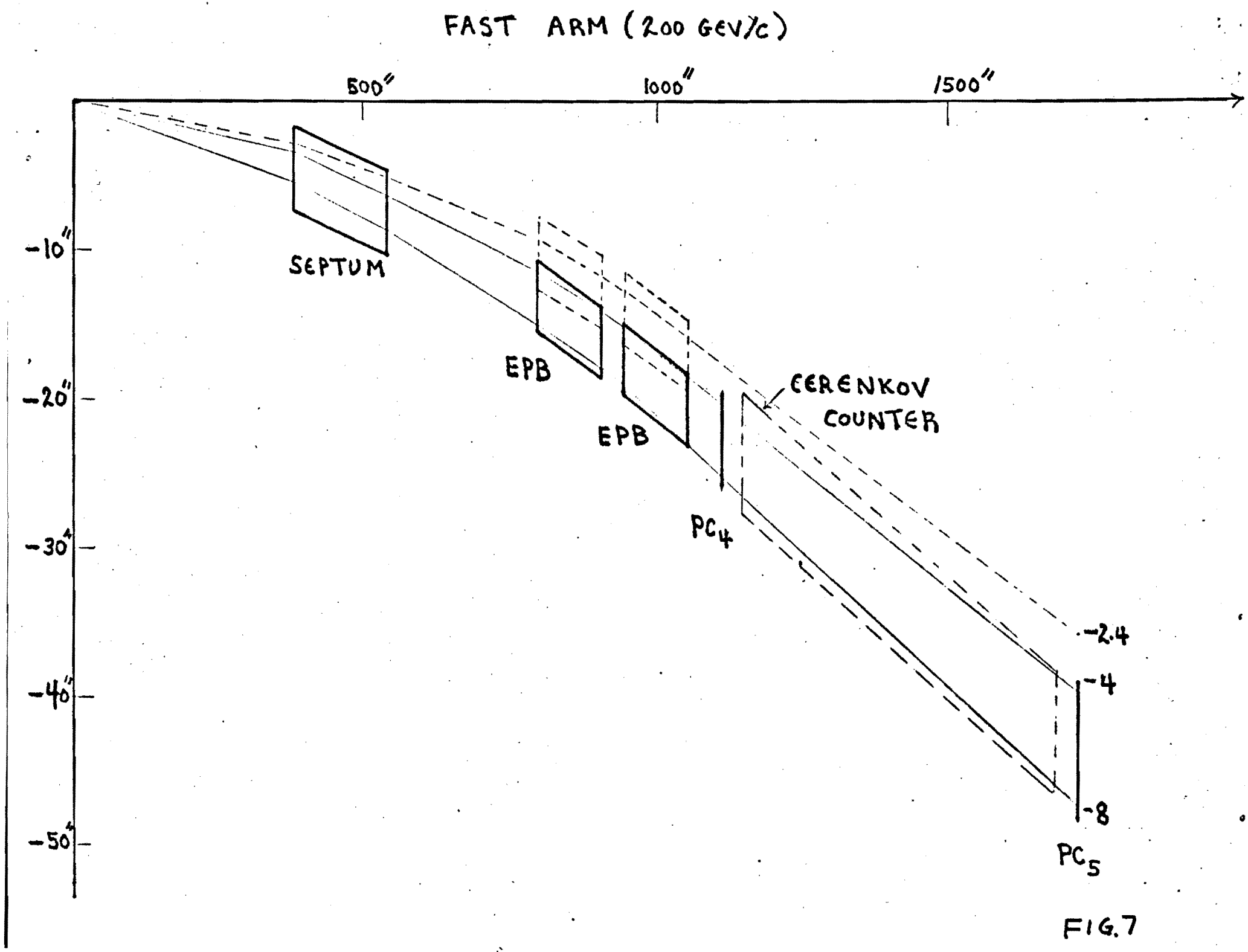
FAST ARM (200 GEV/c)
500"
1000"
1500"
-10"
-20"
-30"
-40"
-50"
SEPTUM
EPB
EPB
CERENKOV COUNTER
PC4
-2.4
-4
-8
PC5

FIG. 7
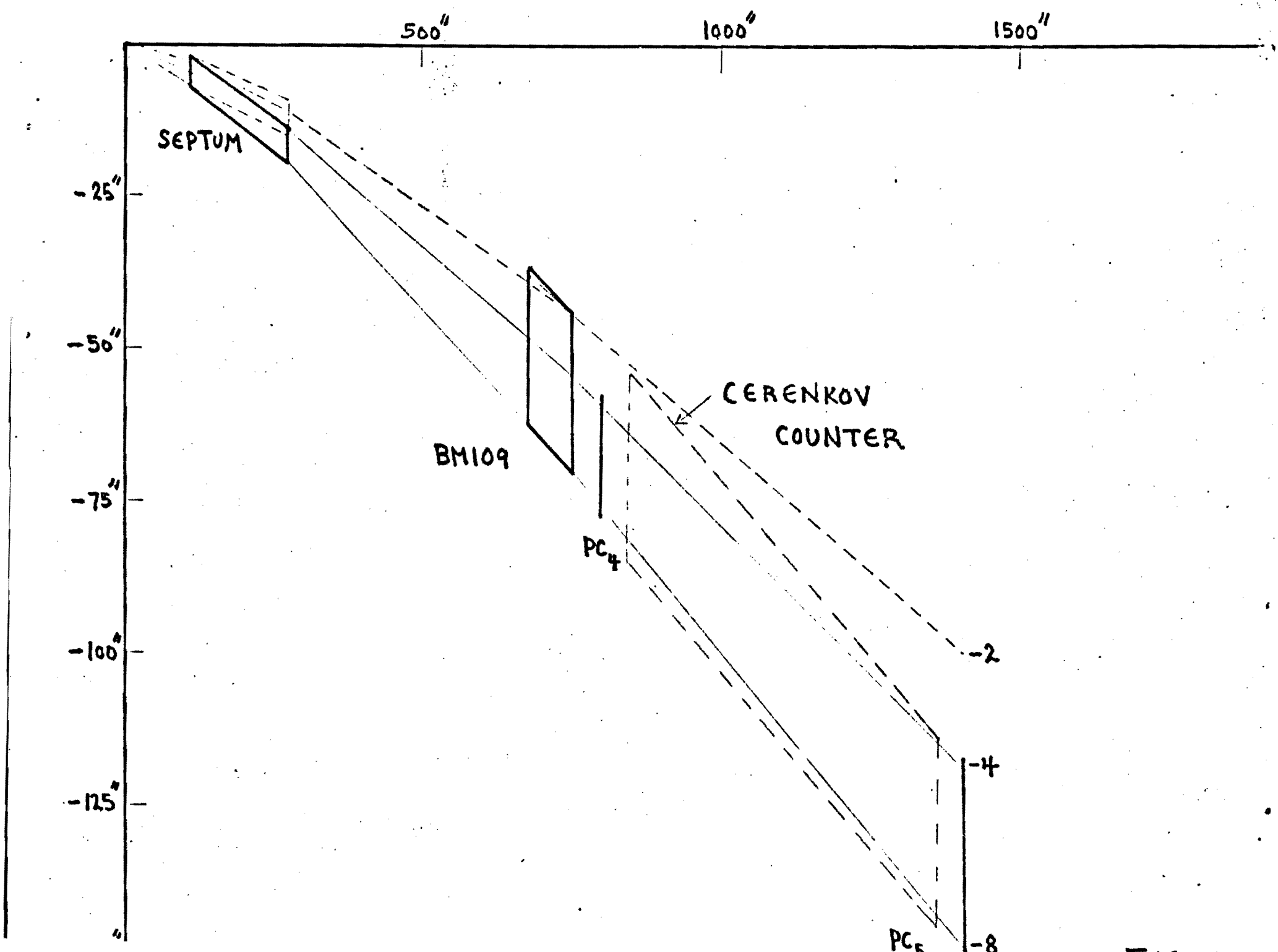
FAST ARM (30 GeV/c)