NAL PROPOSAL # 288

Scientific Spokesman:

L. M. Lederman
Physics Department
Columbia University
New York, New York 10027

FTS/Off-net: 212 - 460-0100
280-1754

A Study of Di-Lepton Production in Proton Collisions at NAL

J. A. Appel, M. H. Bourquin, D. C. Hom, L. M. Lederman, J. P. Repellin, H. D. Snyder, J. K. Yoh (Columbia University); B. C. Brown, P. Limon, T. Yamanouchi (NAL).

(Formerly #70 Phase III)

February 1974

ADDENDUM TO PROPOSAL 70

"Study of Lepton Pairs from Proton-Nuclear Interactions; Search for Intermediate Bosons and Lee-Wick Structure"

L.M. LEDERMAN, W. LEE, J. APPEL, D. SAXON

Columbia University, New York, N.Y.

M. TANNENBAUM, Harvard University, Cambridge, Mass.

L. READ, J. SCULLI, T. WHITE, T. YAMANOUCHI

National Accelerator Laboratory, Batavia, Ill.

December 1970

I. INTRODUCTION

This addendum is designed to update our original proposal (I) with special emphasis on backgrounds, phasing in logistics and time scale.

II. REVIEW OF OBJECTIVES

We propose to use real and virtual photons as a tool to probe weak, electromagnetic and what have you structures of hadrons in three phases:

1. Photon Survey. Using total absorbing Cerenkov counters with high resolution (~ 1-2%), we survey the spectrum of photons vs production angle down to as small an angle as the system will work. For $P_T \ll 3$ GeV, this is a simple pion (π^o) beam survey, at $P_T \geq 3$ GeV the photons may well arise from other mechanisms and provide both intrinsic interest and valuable information on backgrounds. The technical feasibility, neutron problems etc. were briefly discussed in I and subsequent considerations reaffirm that this is a very simple, informative first encounter with $\sim 10^{10}$-10^{11} interactions of 500 GeV protons (target: ~ 0.01 rad. length Be or possibly H_2).

2. Single Arm Small Aperture Study of $e^{\pm}$ at Large P_T. This is a search for the continuum momentum and angle distribution of single electrons arising from the reaction

$$p + p \rightarrow e^+ + e^- + \text{anything} \qquad (1)$$

and the superposition of resonant bumps due to the two body decay of massive objects:

$$x^{\pm} \rightarrow e^{\pm} + \nu \qquad (2)$$

or

$$x^o \rightarrow e^+ + e^-. \qquad (3)$$

Examples of (2) are the weak intermediate boson, of (3) are heavy vector mesons, neutral weak bosons, Lee-Wick massive photon. The point is that the kinematics of decay coupled with very plausible models of production (see below) give enhancement in the distribution in p, θ plot or in the P_T projection (see Figs. 1, 2).

3. Double Arm Study of Lepton Pairs. This is a larger aperture study of the continuum distribution of effective masses of the dilepton produced in (1). It is complementary to reactions of deeply inelastic scattering

$$e + p \rightarrow e + \text{anything} \tag{4}$$

and clashing e^+e^- beams

$$e^+ + e^- \rightarrow \text{anything} . \tag{5}$$

Recent theoretical analysis of (1) indicates that the rather special diproton initial state can be handled and the range of variables s and $m_{e^+e^-}^2$ far surpasses those available in the timelike "competition" of reaction (5).

The continuum serves also to "measure" the theoretical production cross section for weak charged bosons via the CVC arguments of Yamaguchi etc.

However, the major thrust is to search for new physics however weakly coupled to hadrons via the 1^- state we are studying. The larger apertures here would extend the sensitivity of the single arm search by an order of magnitude. The observation of pairs permits a study of parity violation via the term:

$$\underset{\sim}{e}^+ \times \underset{\sim}{e}^- \cdot \underset{\sim}{p}_{beam} \quad \text{and} \quad \underset{\sim}{e}^{\pm} \cdot \underset{\sim}{p}_{beam}$$

both in the continuum and in the bumps. This is a unique way of detecting neutral lepton currents in a background of electromagnetism. Note also that ~~it is possible~~ the second term permits us to establish parity violation in the single arm search if the gods are kind.

III. RATES

We base our estimates on the principle of minimal theoretical interactions by assuming that, for dimensional reasons; the cross section for reaction (1) can be written:

$$\frac{d\sigma}{dq^2} = \frac{1}{q^4} F(s,q^2) \qquad q^2 = m_{e^+e^-}{}^2 \qquad (6)$$

and F is a dimensionless function of the remaining variables.

We assume scaling:

$$F(s,q^2) = F(s/q^2) \qquad (7)$$

in the NAL domain.

We then deduce the s-dependence from the observed q^2 dimuon data at BNL at fixed s:

$$s = 60 \text{ GeV}/c^2 \quad . \qquad (8)$$

In the yields presented, we actually used the formulae of Drell and Yan's parton annihilation model (Phys. Rev. Letters 25, 316 (1970) but, in effect, only for analytical guidance in the region where νW_2 varies with s/q^2 and to define the production dynamics for our detection efficiency calculations. Since in this theory, no transverse momentum for "γ" production appears, we inserted the distribution $e^{-p_T/0.4}$ observed at BNL.

The resulting s-dependence is far more pessimistic than several other theories and the (limited) s-dependence observed at BNL.

We predict the yield of $W^{\pm}$ of mass M_W from the pair cross section, Eq. (1), $d\sigma/dq$ $(q^2=M_W{}^2)$ via the CVC argument, neglecting the axial vector contribution:

$$\sigma_W = 0.025\ M_W{}^3/M_p{}^2 \left(\frac{d\sigma}{dM_{ee}}\right)_{M_{ee}=M_W} \tag{9}$$

We predict the distortion of the continuum by the existence of a Lee-Wick pole in the kinematic region available at NAL via the multiplicative factor proposed by these authors. The integrated enhancement is given by

$$\sigma_B = \frac{3\pi}{4}\ 137\ M_B \left(\frac{d\sigma}{dM_{ee}}\right)_{M_{ee}=M_B} . \tag{10}$$

The single arm rates are summarized, together with backgrounds, in Fig. 2.

~~This permits~~ The unique nature of the differential enhancement permits the detection of B even if the mass is as high as 50 GeV! This is because the distortion of the dilepton spectrum near the endpoint is still larger than a factor of 2. This endpoint can be calibrated by exposures at lower energy, where the distortion is negligible.

IV. BACKGROUNDS

These are i) charged pions simulating electrons or ii) electrons from π^o's. It is easy to demonstrate that i) dominates over ii) since the production rates of $\pi^{\pm}$ to π^o are roughly the same but the electronic suppression of charged pions in our detector (conservatively 10^{-3} to 10^{-4}) is less than the automatic suppression of π^o electrons via (1) the branching ratio $\sim \frac{1}{80}$ and the fact that a given $e^{\pm}$ must come from a higher energy neutral pion. Detailed calculations using the kinematics of Dalitz decay and the P_T behavior of pions discussed below give rise to an additional suppression by a factor of 10^{-2} to 10^{-3} depending on the pion energy spectrum we used. Thus, we discuss the charged pions:

The semi-official Hagedorn-Ranft thermodynamic model has been meticulously contrived to fit data in the region of accelerator energies. The fact that the pion yields are

Moreover, the π^o's will frequently give rise to observable pairs of electrons permitting a further suppression and subtraction. Thus all of this renders π^o's harmless compared to $\pi^{\pm}$.

governed by the exponential factor $e^{-P_T/q}$ is verified out to $P_T \cong 3$ GeV/c by the BNL dimuon experiment. Its extrapolation even to 5 GeV/c of transverse momentum (see Fig. 2) gives essentially zero background <u>with no detector suppression</u> whatever. We have taken, as the worst imaginable background, a sharp break at $P_T = 3$ GeV/c towards a form suggested by Serber

$$\frac{d\sigma}{dp_T} \sim \frac{1}{P_T^{\,3}} \quad \text{(pt. structure for transverse momenta)}$$

(Any more pathological behavior than this is automatically redefined as foreground.)

Single scattering of forward produced pions has also been considered but also contributes to the data upon which the H.R. model is based.

Figure 2 again shows the results of the charged pion yields before electronic suppression. It is seen that even a discrimination of a factor of only 10^3 between pions and electrons at $p \geqslant 50$ GeV results in an extremely favorable signal to noise rate <u>in the single arm</u> experiment. We recognize the speculative feature of this proposal. The single arm experiment may in fact meet unforeseen difficulties. We assert, however, that in the pair experiment, the coincidence requirement completely eliminates all background. This experiment will work like a charm.

The conclusion that directly produced leptons may well dominate the NAL flux at $P_T \geqslant 3$ GeV/c is supported by the BNL dimuon experiment where the "effect" i.e., pairs over $\pi \to \mu$ background goes from $\sim 2\%$ at low mass to $\sim 50\%$ at $m_{\mu\mu} = 5$ GeV.

V. DETECTION TECHNIQUES

We briefly recapitulate: Magnets are principally used for sweeping low momentum particles out of the detection aperture. They also serve to define momenta to 5-10% (full width) depending on the hodoscope complexity; better if Charpak wires can survive the rates. The high resolution in mass is achieved by total absorbing Cerenkov counters now being tested at BNL. At 10 GeV, pion suppression is easily 10^{-3} and resolutions of 4% (FWHM) have been achieved. Things should get better at higher energies. See I for further details.

VI. LOGISTICS

A. Beam Area

Discussions with Sanford and Wilson indicate that Area 3 is most appropriate. We require about 200 ft of space downstream of a small transmission target (~ 0.01 rad. length of low Z: Be or H_2) flaring out to a ~ 40 ft width at about 150 ft. Detailed sketches of the building requirements, shielding and disposal of apparatus are in the process of being made.* As for timing, putting ourselves in the NAL frame, we propose to be ready in July, 1971 with a high resolution photon and electron detector (with strong hadron suppression) which can easily be moved in order to make the beam survey. The single arm spectrometer is based upon two 18D72 type AGS magnets which we hope to borrow and install by early fall, 1971. At this time, we will have an area of Pb-Glass counters which is 2 ft x 4 ft and which covers the 8 mrad x 8 mrad aperture, together with appropriate

* We expect this area to be furnished with a beam of $\gtrsim 10^{12}$ protons per pulse of "500" Gev ~ 1% of which will interact in our target. It would be an important feature of our research to lower the energy of the protons for exposures at 300 and 200 Gev.

readout, scintillation hodoscopes, etc.

The double arm large angle spectrometer, discussed below would, if begun January 1971, be ready by early spring, 1972, by which time matching shower counter arrays should also be available.

VII. WHO DOES WHAT

We divide the research into three systems:

1. Magnets ~ cost scale ~ $140 K exclusive of refrigeration.

   -- See below Appendix A.

2. Pb Glass Electromagnetic Spectrometer ~ $300K -

and

3. Electronics, hodoscopes, Charpak wires, gas Cerenkov Counter, etc. ~ Cost ~ $150K (see (I).

The accelerated time scale of the NAL program coupled to the well known budgetary squeeze makes funding a severe problem. However, we would expect:

1. The magnets to be built by NAL (Nevis could assist in design or model tests).

2. The remainder of the apparatus to be provided by Nevis and its Collaborators. We would expect to ask for <u>some</u> additional support from the funding agencies in order to meet the time scale discussed above. It would be natural to separate item 2 as a discernable facility to remain at NAL and ask for special support from the AEC to provide this.

VIII. RUNNING TIME

Based upon experience at BNL and with a healthy respect for the unknown terrors of 500 GeV, we propose for the various phases:

I: About 3 months; some debugging of Phase II here.

II: About 4 months.

III: Pairs are somewhat more programmatic but our original estimate of 5×10^5 pulses typically about 6-8 months still seems reasonable for a very good survey of the entire mass range. Thus, we would expect to relinquish our NAL territory by fall of 1972, assuming typical BNL-type experience, and the magnet and area availability assumed above.

IX. PEOPLE

P.I. Leon M. Lederman*	Professor, Columbia University
Wonyong Lee**	Assoc. Prof., " "
J. Appel†	Asst. Prof., " "
D. Saxon†	Research Associate, Columbia Univ.
I. Gaines	Graduate Student, " "
H. Paar	" " " "
M.J. Tannenbaum†	Assoc. Prof., Harvard Univ.
T. Yamanouchi††	
L. Read††	National Accelerator Laboratory
J. Sculli†††	
T. White†††	

Nevis Laboratories has a staff of 3 mechanical engineers (Senior Engineer, Mr. Yin Au) and 3 electronic engineers (Senior Engineer, Mr. W. Sippach). Typically, we have two full time on-site technicians for BNL experiments. We expect to shift these to NAL.

Other activities:

* ISR research committed when NAL beam date was July '72 as detailed in Proposal (I).

** A tagged photon beam experiment (NAL Proposal 87). This experiment is considered to be in series with #79 and will use much of the same apparatus.

† Full time NAL Experiment.

†† Liason Scientists: We expect their contribution to be largely in interface with the accelerator and its peripherals.

††† We expect these collaborators to be analogous to University people; with other duties comparable to the teaching duties of the University people.

<u>Note</u> In view of the magnitude of the effort, the finances and the standard difficulties of University people, we expect to seek additional collaborators.

APPENDIX A

Large Aperture Magnets

1. Cold Magnet Version

Time schedule and cost estimates for the large aperture magnets are prepared by Ron Fast at NAL. The dimensions of the magnet are shown in Fig. 3.

Cost estimate:

Conductor	$20 K
Coil Winding	10 K
Cryogenic	20 K
Iron	15 K
Power Supply	5 K
TOTAL	70 K
Refrigerator	20 K

Time Schedule:

~ 1 year from the date of approval for completion of 1 magnet and 1 1/2 years for 2 magnets.

Figure 1 Transverse momentum spectra for various processes, assuming 0.5% acceptance in apparatus.

1. $pp \rightarrow \pi^{\pm} + \ldots$ according to Hagedorn-Ranft (Nuovo Cimento Suppl. I, 6, 169 (1968)) and Serber (private communication).

2. $pp \rightarrow e^{+}e^{-} + \ldots$ according to the parton model, (S. Drell and T.M. Yan, Phys. Rev. Letters 25, 316 (1970)) adjusted to fit $pp \rightarrow \mu^{+}\mu^{-}$ at 29.5 GeV (J.H. Christenson et al, Phys. Rev. Letters 25, 1523 (1970)).

3. $pp \rightarrow W + \ldots$ $W \rightarrow e\nu$. Calculated from the $e^{+}e^{-}$ production by CVC (Y. Yamaguchi, Nuovo Cimento 43, 193 (1966)) assuming branching ratio $W \rightarrow e\nu$ is 1.

The signal for $pp \rightarrow B_o + \ldots$, $B_o \rightarrow e^{+}e^{-}$ is similar to that of W (T.D. Lee, G.C. Wick, Phys. Rev. D2, 1033 (1970)).

Figure 2 Transverse momentum spectrum of electrons produced by

$$pp \to W^+ \hookrightarrow e\nu$$

at 500 GeV incident energy and 15 GeV W mass. Three curves are given

1. $\rho_{oo} = 1$. Longitudinally polarized W is produced. Decay distribution is

$$\frac{dN_e}{d\cos\theta} = \frac{3}{4}\sin^2\theta \ .$$

CVC analogy with photoproduction makes this polarization unlikely.

2. $\rho_{oo} = 0$. W produced polarized transversely.

$$\frac{dN_e}{d\cos\theta} = \frac{3}{4}\left[(\rho_{11}+\rho_{-1-1})(1+\cos^2\theta)+2(\rho_{11}-\rho_{-1-1})\cos\theta\right].$$

This is the more probably mechanism.

3. $\rho_{oo} = 0$, and the W is produced with a transverse momentum spectrum $\exp(-3.3\ p_t)$. The parton model used is 1, and 2, predicts no transverse W momentum. (3) shows that provided the transverse momentum is much less than the W mass, the peak for p_t is still preserved.

ELECTRON TRANSVERSE MOMENTUM SPECTRUM

$p\,p \to W + \cdots$
$\quad\quad \hookrightarrow e\nu$

$M_W = 15$ GeV

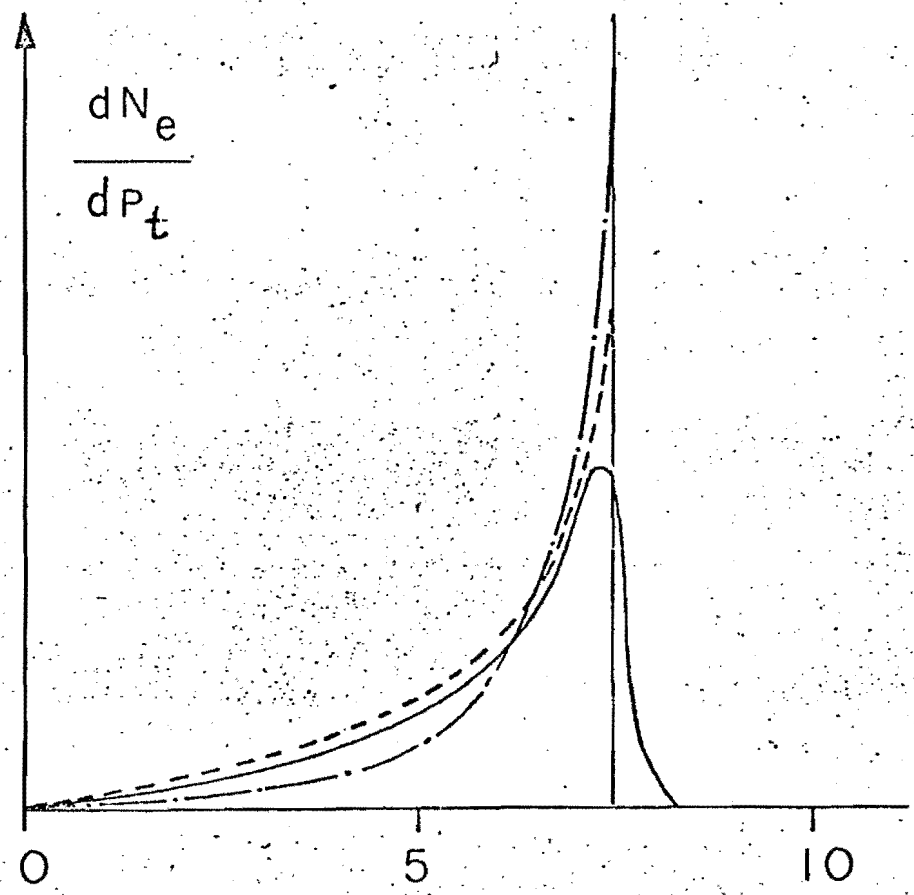

$\rho_{00} = 1$ (UNLIKELY)

$\rho_{00} = 0$ (LIKELY)

$\rho_{00} = 0$ W HAS TRANSVERSE MOMENTUM SPECTRUM EXP$(-3.3P_t)$

Fig 2

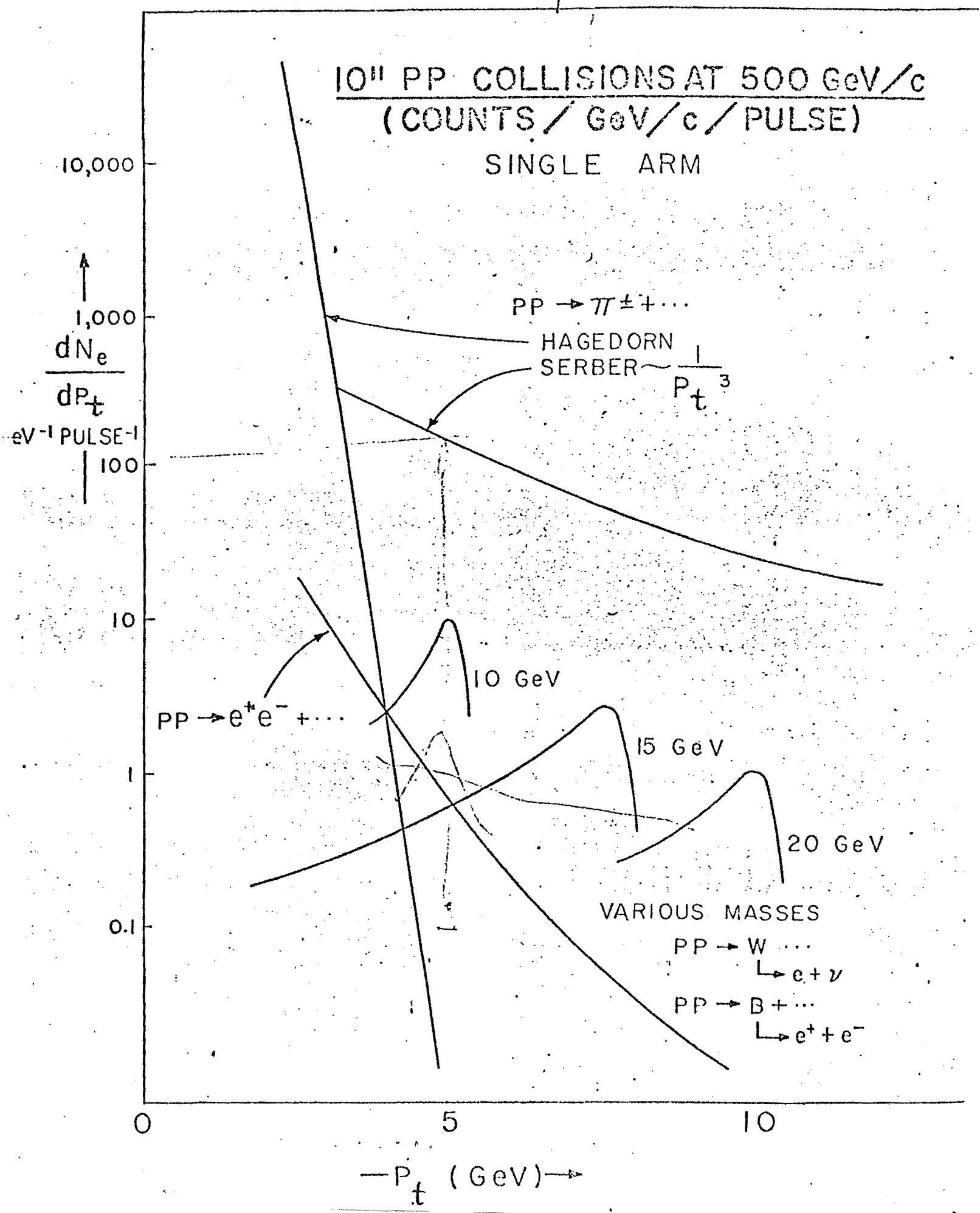
10¹¹ PP COLLISIONS AT 500 GeV/c
(COUNTS / GeV/c / PULSE)
SINGLE ARM
10,000
1,000
100
10
1
0.1
dN_e / dP_t
eV⁻¹ PULSE⁻¹
PP → π± + ···
HAGEDORN
SERBER ~ 1/P_t³
PP → e⁺e⁻ + ···
10 GeV
15 GeV
20 GeV
VARIOUS MASSES
PP → W ···
↳ e + ν
PP → B + ···
↳ e⁺ + e⁻
0
5
10
—P_t (GeV)→

Fig 3

Dimensions of Magnet

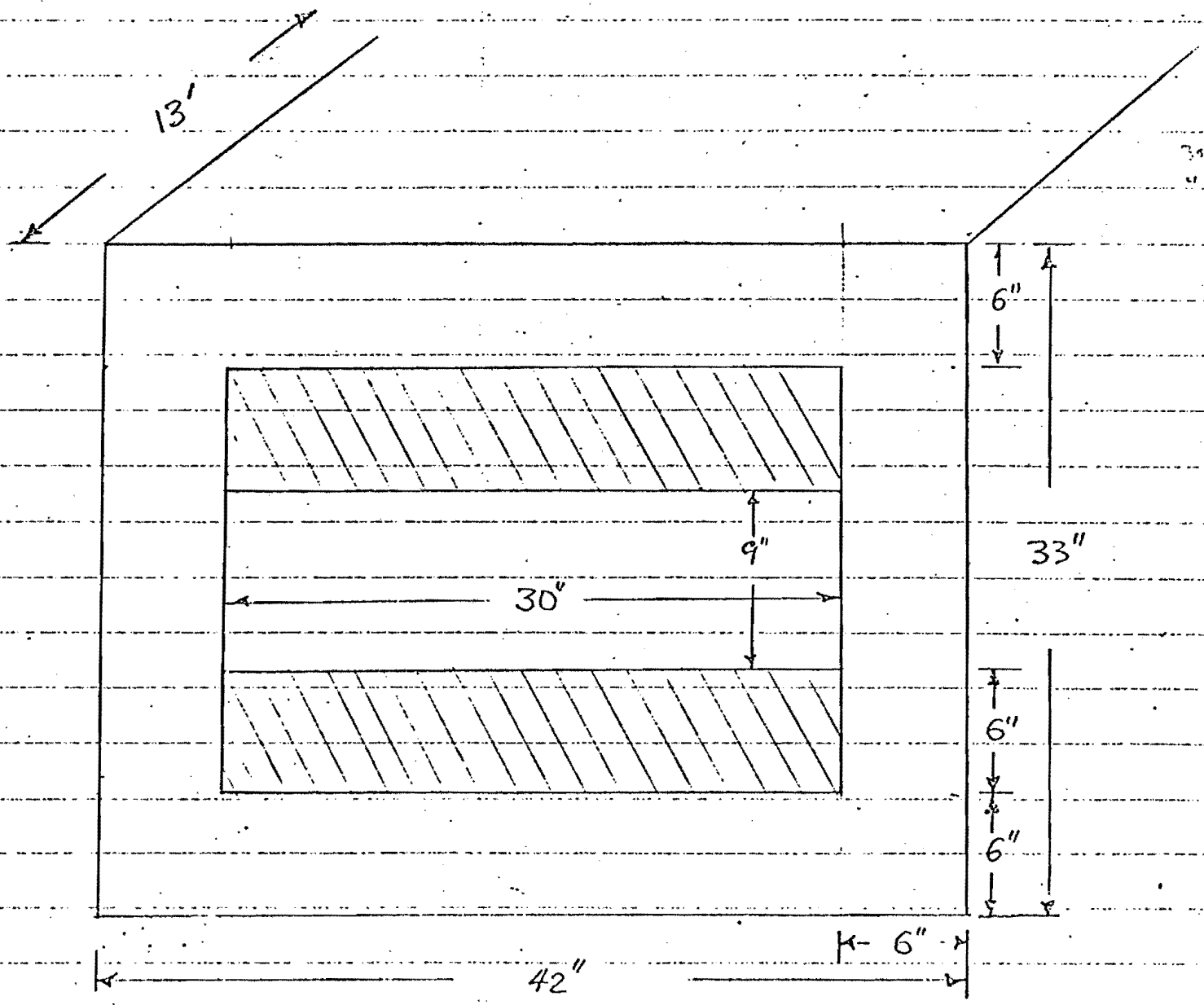

15 Kg

NAL PROPOSAL No. 70

Correspondent: L. M. Lederman
Physics Department
Columbia University
New York, N. Y. 10027

FTS/Off-net 212-460-0100
280-~~1754~~ 3308

STUDY OF LEPTON PAIRS FROM PROTON-NUCLEAR INTERACTIONS: SEARCH FOR INTERMEDIATE BOSONS AND LEE-WICK STRUCTURE

W. Lee, L. M. Lederman, J. Appel
Columbia University

M. Tannenbaum
Harvard University

L. Read, J. Sculli, T. White, T. Yamanouchi
National Accelerator Laboratory

June 17, 1970

Proposal to The National Accelerator Laboratory

"Study of Lepton Pairs from Proton-Nuclear Interactions; Search for Intermediate Bosons and Lee-Wick Structure"

W. LEE, L.M. LEDERMAN, J. APPEL, Columbia University, M. TANNENBAUM, Harvard University, L. READ, J. SCULLI, T. WHITE, and T. YAMANOUCHI, National Accelerator Laboratory.

ABSTRACT

We propose to observe lepton pairs emerging from high energy proton-nuclear collisions. Large effective mass pairs probe the hadronic electromagnetic structure. The continuum mass spectrum will be measured and any resonant structures in the mass range up to ~ 28 GeV will be detected with great sensitivity. The data provides a prediction, via Conserved Vector Current theory, for the production cross section for weak vector bosons and these are also sought in the mass range ~8-28 GeV. We also propose an initial photon-electron beam survey at high transverse momentum which is also a W-search with good sensitivity.

June 17, 1970

Correspondent: L. M. Lederman, Columbia University

II. PHYSICS JUSTIFICATION

A. Introduction

We propose here to study the emission of lepton pairs in 500 GeV proton-nucleus collisions: i.e. p + nucleus $\rightarrow e^+ + e^- +$ anything.

The objectives of this proposal will be:

1. To observe the differential cross section for emission of pairs of effective mass $M_{e^+e^-}$ up to the kinematic limit of $\sim$ 28 GeV.

2. To observe structures in the dilepton mass distribution with a mass resolution of the order of 1%. In the particularly interesting case of the Lee-Wick[1] theory, the heavy photon pole would be easily observable if it exists and its mass is less than 30 GeV.

3. To search for the charged intermediate vector meson via its leptonic decay mode. The cross section for production of intermediate bosons is provided by the electromagnetic pair distribution (to within a factor of 2 or 3) via CVC.

B. "Theoretical" Considerations

1. Dileptons

The observation of lepton pairs emerging from otherwise unrestricted hadronic collisions at fixed s is a new tool for probing hadronic electromagnetic structure. Furthermore, the available domain of variables far surpasses anything that will be available from electron machines or electron storage rings. The continuum has great

theoretical interest; provides the background pedestal for ρ-like resonances, for the Lee-Wick pole and serves to calibrate the W experiment.

Several theoretical papers have recently been stimulated by the BNL dimuon experiment. These try to relate the heavy time-like photon of mass $|q|$ observed here to the deeply inelastic scattering results at SLAC. Generally the results are of the form

$$\frac{d\sigma}{dq^2} = G(s)\ F\left(\frac{s}{q^2}\right) \tag{1}$$

where F is a universal "scaling function" related to the νW_2 of inelastic electron scattering; s is the square of the total energy in the CM system. Lacking anything better we have studied two of these models to predict the results of a pair experiment at NAL. Both give adequate fits to the 30 GeV BNL data.

Drell[2] gets $G(s) = \frac{1}{s^2}$; $F\left(\frac{s}{q^2}\right) \sim \frac{s^2}{q^4} R(s/q^2)$ (2)

where R is slowly varying for $q^2 \ll s$

Brandt[3] gets

$$G(s) = \frac{1}{s}\ ;\ F\left(\frac{s}{q^2}\right) \cong \frac{s^3}{q^6} \tag{3}$$

Clearly the Drell model is more pessimistic and we give its predictions in Fig. 1. The scale parameter in this model is adjusted to the BNL data. It is seen that this predicts observable pairs out to near the limit if the experimental sensitivity exceeds 10^{-38} cm^2.

The sensitivity to narrow resonances can be read from this graph: e.g. at 20 GeV a σB of 10^{-36} cm^2 should be easily detected. (We stress that this is only an illustration of what may be observed; nature may be totally different).

2. Intermediate Boson Production

The reaction is

$$p + \text{"N"} \rightarrow W^{\pm} + \text{anything}$$
$$\hookrightarrow e^{\pm} + \nu \qquad (4)$$

Historically, such experiments have been carried out at BNL and at Argonne but suffered from the inability of theorists to predict the cross section. Thus a negative result was useless since no statement could be made concerning the W-mass. In contrast, neutrino production (or lack of it) led to the one firm number we have: $M_W > 2$ GeV.

However, the recent BNL dimuon experiment[4] demonstrated an easily measurable continuum of lepton pairs emerging from proton-uranium collisions. The arguments of Chilton[5] and Yamaguchi[6] related reaction (4) to the reaction:

$$p + \text{"N"} \rightarrow \text{"}\gamma\text{"} + \text{anything}$$
$$\hookrightarrow \mu^+ + \mu^- \qquad (5)$$
$$\text{or } e^+ + e^-$$

The prediction for Intermediate Boson production is obtained from the ratio:

$$\frac{d\sigma_W}{d\sigma_{em}} = \frac{g^4 \int dq^2 \left| \langle j^{VA} \rangle \langle J^W \rangle \frac{1}{(M_W - i\frac{\Gamma}{2})^2 + q^2} \right|^2}{e^4 \left| \langle j^V \rangle \langle J^{em} \rangle \frac{1}{q^2} \right|^2 dq^2}$$

which yields

$$\sigma^W \simeq 0.05 \left| \frac{d\sigma}{dq} \right| M_W^3 \, B \; (B \equiv \frac{\Gamma_{e\upsilon}}{\Gamma}) \qquad (6)$$

assuming approximate equality of the weak vector and the electromagnetic isovector matrix elements. We also neglect the axial vector contribution which may contribute a factor of 2 here. B is the leptonic decay branching ratio which may be large ($B \gtrsim \frac{1}{4}$) for a high mass boson. The M_W^3 term boosts the boson cross section to a high level. The interesting conclusion is that if this extrapolation is correct, the W will be found at NAL in p-p collisions if the mass is less than 30 GeV!

Assume 10^{13} interacting protons and a run of 10^6 pulses; Assume a geometric efficiency of .3% and require 100 events. One finds for the cross section x branching ratio:

$$10^{13} \times 10^6 \times \frac{\sigma B}{3\times10^{-26}} \times .003 = 100$$

$$\sigma B = 10^{-40} \text{ cm}^2!$$

This enormous sensitivity implies that very significant work can be done with far less intensity and efficiency.

3. Lee-Wick Pole

The Lee-Wick version of quantum electrodynamics teaches us that the cross section for any reaction involving a virtual photon, mass q^2, the intensity should be multiplied by a factor:

$$\frac{M_B^4}{(M_B^2 + q^2)^2 + M_B^4 \alpha^2} \qquad (7)$$

which contributes an integrated enhancement of a factor 137 to the cross section at $-q^2 = M_B^2$. The strength and width of this bump is unique. The crucial requirement that an experiment be sensitive to this is the existence of a "platform" of virtual photons on which this peak may rest. Dileptons provide such a base and here, the bigger the background, the easier the detection. This striking QED breakdown is best sought in just this kind of experiment because of the large luminosity of NAL protons and the fair likelihood of a reasonable production rate of virtual photons. If the Drell model is anywhere near the truth, dramatic effects will be observed if the mass $M_B \leq 28$ GeV/c^2.

4. Summary

This experiment combines many important features in NAL research: it is exploratory to the full energy of the accelerator; it searches with great sensitivity for particles predicted by good theory and over a wide domain for new objects coupled to l^- systems and finally, it measures an interesting distribution: the dilepton mass continum emerging from hadron collisions. At this time we will forgo a discussion of partons, scaling and light cone commutators in favor of our concern with Cerenkov counters, magnets and hodoscopes.

5. Other Relevant Experiments

One sort of "competition" comes from a similar proposal accepted for the CERN ISR from a CERN-Rockefeller University - Columbia group. We look at this

as very complementary to the NAL proposal. The advantage of the ISR is the domain of variables: $S \approx q^2 = 3000\ GeV^2$. The weakness of the ISR is the luminosity: 10^5 interactions/sec as compared to $\geq 10^{10}$ at NAL. It is possible that the ISR run (scheduled for late 1971) will make all the discoveries sought for here but this would imply a pair cross section at $q^2 = 900$ of $\geq 10^{-34}\ cm^2$ which is 3 orders of magnitude bigger than Drell's model. Uncertainties in the physics backgrounds and the relative hostility of the environments also exist. It is our very strong conviction that both searches must be made.

One should also compare this search for W's with neutrino production of W's. It is generally recognized that, for 200 GeV operation, the flux is barely sufficient to produce W's of ~ 8 GeV mass...using high intensity and long exposure e.g. Mann[7] estimates 5 events/day for 50 ton spark chamber at $M_W = 8$ GeV.

We believe the proton production to be the <u>only</u> way to study the mass range above 12 GeV.

III. EXPERIMENTAL ARRANGEMENT

A. Introduction

The BNL experiment used a "beam dump" consisting of variable density uranium block to suppress a background of muons from π and K decay. The subsequent multiple scattering of the emerging muon pairs degraded the mass resolution considerably. In the present experiment we have chosen electron pairs because we believe the backgrounds will be

smaller and because it is easier to measure electron momenta to $\sim$ 1%, required to achieve a mass resolution of $\leqslant$1%. (Ultimately a comparison of dimuons and dielectrons will probe universality down to $\Lambda^{-1} > 30$ GeV, timelike photons). Our proposal consists of two stages:

1. A simple but vital "beam survey" to measure the momenta of photons and electrons in the angular range from $\sim$ 50 mr to 100 mr at several proton energies up to 500 GeV. This will provide essential data on production processes, chiefly of π^0's. At the high transverse momenta emphasized here, all the data are interesting and essentially nothing is known, even by Hagedorn. This experiment is a search for $W \rightarrow e + \nu$ and for $B \rightarrow e^+ + e^-$ with a limited average sensitivity of $\sigma B < 5 \times 10^{-36}$ cm^2 over the mass range $\sim$ 8 - 30 BeV/c^2. This <u>assumes</u> that electrons from the weak boson dominate over electromagnetic pairs as described above (i.e. the CVC argument) and it assumes no large, <u>anomalous</u> production of pions in the $\geqslant$ 4 GeV/c transverse momentum range.

2. A dielectron pair detection arrangement involves gas Cerenkov counters, magnetic deflection, scintillation hodoscopes and Pb-glass Cerenkov counters in an arrangement which is roughly of the scale of a "standard" AGS experiment. This will measure the differential cross section for lepton pair production vs dilepton mass and also increase the sensitivity of the B and W-search to $\sim 10^{-38}$ cm^2.

B. Beam Survey and Weak Boson Search

1. Weak Boson

The philosophy of search for the intermediate boson is the following:

A small aperture single arm system is proposed, based on a simple dipole to deflect electrons out of the neutral beam. This system is furnished with detectors which will, we hope, guarantee that we are counting electrons from a thin target intercepting about 5×10^{10} interactions/pulse. The target may be internal or external. At 500 GeV, we have some sensitivity to W's of mass between ~ 8 GeV/c and 28 GeV/c. The expected sensitivity is model dependent i.e. once the energy available in the CM is more than enough to produce a W, the unknown dynamics of production and decay (polarization effects) determine the efficiency of the system. (This efficiency will become much better known when the lepton pairs are studied in phase II). Rather than use any of the current theories, we have devised a number of simple models to dispose of the surplus CM energy. These models must bracket the true situation. Typical results for several of the models is shown in Fig. 2A.

A simple calculation of the sensitivity is to estimate a mean efficiency ~ 5×10^{-4} from this figure. Then with 5×10^{10} interacting protons and 5×10^{4} pulses we have: the number of interacting protons x fraction making a W x efficiency =

$$5 \times 10^{10} \times 5 \times 10^{4} \times \left(\frac{\sigma B}{3\times10^{-26}}\right) \times 5 \times 10^{-4} = 200 \text{ events} \quad (8)$$

The "200 events" is considered a 5 σ "bump" on a background of electromagnetic pairs plus dalitz pair electrons from π^0 decay.

According to a blind extrapolation of the Hagedorn-Ranft curves we would expect ~5 dalitz pairs per pulse entering the aperture with the minimum transverse momentum of 2.5 GeV/c. The number in the p_T region of interest is ~ 0.05 which yields a background of 9×10^3 electrons per 10% interval of p_T in the designed run. We emphasize that this extrapolation of the Hagedorn curves is extremely speculative. A large fraction of these will be very narrow angle pairs which will be separated by the magnet and detected. Thus, a subtraction of this steeply falling smooth background may be made. Figure 2B presents the W bump at 20 GeV, using the Drell model of Fig. 1 for two extreme models. Everything said here about weak bosons, W, also applies to Lee-Wick heavy photon, B.

Kaons could also give electrons but suffer an immediate suppression by factors of 5% x 10% x 5% for branching ratio times production yield times decay probability. Presumably kaons also respect the famous factor exp $(-p\theta/0.25)$ from which we expect much.

As discussed above, we obtain the electromagnetic background by integrating the pair curve in Fig. 1 over the mass efficiency curve (where model 5, the worst case, is used). We are helped by the tendency for the electrons

from W's to "peak" at transverse momenta near the value $M_W/2$, even in the case of isotropic CM emission of W's. The resolution in $p_T (\leq 1\%)$ is adequate for this. The above equation (8) yields

$$\text{limiting } \sigma B < 5 \times 10^{-36} \quad \text{(worst model)}$$

A comparison with Fig. 1 raises the distinct possibility that this is quite interesting. More detailed Monte Carlo foldings are required. At this writing we would include a leptonic branching ratio of $B=\frac{1}{2}$ for W's:

$$\text{limiting } \sigma_W < 2 \times 10^{-35}$$

which is still below our prediction from the Drell model near <u>the kinematic limit</u>.

<u>We summarize</u>: Assuming our counters survive and succeed in counting electrons we will have a distribution in p_T at several angles (say 50, 70, 90, 110 mr) and for several machine energies (say 500, 300 and 150).

We expect the W to show up as a shoulder or bump on a rapidly decreasing background. This bump will be very near the value $p_T = M_W/2$ and move closer to it and become more pronounced as we approach threshold. The bump is very likely to show a positive excess which will also get larger as the beam energy approaches threshold for W production.

The behavior of the p_T bump with angle is also characteristic of W production in a way which is less model dependent as we approach threshold.

Of course if no bump is observed, we need the pair experiment to interpret the results and to look harder.

2. Beam Survey

The description above yields the momentum spectrum of electrons from 50 GeV up and from 50 mr up. We can supplement this with the spectrum of photons from 50 mr up. This is done by collimating down one Pb-glass block until its counting rate is $\sim 10^6$/pulse. The spectrum can then be determined down to a rate of 1 count per 100 pulses. Thus we can study $\sim$ 8 decades down from the "most probable" photon events. This is a very simple exploration of large p_T. The magnet provides charged particle sweeping and the hadronic veto (see below) teaches us about the neutron problem, if any.

3. Experimental Details

The arrangement is sketched in Fig. 3. The components involved are listed and described as follows:

(1) Lead and/or uranium collimator to define the aperture, protect the following magnet pole faces; and provide a total shield which will stop muons of less than $\sim$ 20 GeV. The forward cone of $\sim$ 20 mr should probably be left unshielded. This would permit a front collimator of 10 ft of uranium (8 GeV energy loss) whose outer dimensions are 16 in. x 20 in. The total weight of dense shielding is $\leqslant$ 60 tons. These can be organized on 2 or 3 tables for movement.

(2) Magnet. This would be a small aperture dipole with a transverse momentum kick of ~ 1.3 to 3 GeV/c. An NAL main ring spare is a good candidate but suffers from a limited aperture for low momentum because of its length. An AGS 18D72 with reduced horizontal aperture is also suitable. The objective of the magnet is to deflect the desired electrons (from 50 to 220 GeV/c for 500 GeV incident) out of the neutral beam and to provide crude momentum determination (±20%). Deflection would be in the vertical plane to permit closer approach to the beam line and to permit simultaneous measurements of both signs of electrons. This also decouples the magnetic deflection from the emission angle. The requirement of protection against the neutral beam limits the aperture normal to the field.

Practical solutions for simple magnets require a physical aperture of $\leq$ 6 in. in the deflection direction and result in a total angular aperture of about 8 mr. Magnet to target distance must be at least 40 ft and this determines the minimum viewing angle. For simplicity we assume a rectangular aperture of 8 mr by 8 mr for a total solid angle of 6×10^{-5} ster.

This magnetic deflection results in a fan of trajectories at 130 ft from the target e.g.:

220 GeV/c 6 in. → 18 in. from magnet center line

50 GeV/c 48 in. → 60 in. from magnet center line

Thus a detector area of ~ 54 in. x 12 in. is required.

(3) Scintillation hodoscope. The angular range of 8 mr can be divided by 16 vertical strips, 1 in. wide to provide a resolution of ~ 0.5 mr in emission angle. Two planes are required to make a crude momentum determination. This may be as coarse as ± 20% as will be seen below.

(4) Lead-glass Cerenkov counters (Pb-Gl). These provide the primary energy measurement and large pion rejection. Typical blocks are 30 cm long and 5 in. in diameter (~ 15 radiation lengths). Studies at CERN on new, clear Pb-Gl and now running at the AGS indicate an energy resolution given by

$$\frac{\Delta E}{E} \sim \frac{10}{\sqrt{E}}\ \%$$ full width at half-maximum.

Thus at 100 GeV, we expect an energy resolution of ± 0.5 %. (These are extrapolations of low energy results and not yet confirmed. We hope to have results up to 20 GeV/c soon.) The pion rejection derives from the relatively low yield of Cerenkov light emitted by a hadronic cascade. Typical results in NaI (a scintillator) show only a small tail of 10 GeV pion pulses under the 10 GeV electron peak.

Again, quantitative results up to 20 GeV will soon be available. We expect that a threshold of ~ 50 GeV electrons will result in an extremely low efficiency for counting pions below ~ 50 GeV. The crude momentum determination described above should serve to correlate with the pulse height to further suppress pion background.

Using 5 in. photomultipliers (20 in.^{2}) the detector area is covered by 25 counters. The combined counting rate due to pions above 50 GeV, muons penetrating the shield and a guess as to the pole face shine yields ~ 10^4 cts per counter per 10^{10} protons interacting.

(5) Hadron Veto. The Pb-Gl counters are ~120 gm/cm^2 thick. These are followed by 4 in. of Pb (110 gm/cm^2) to make an electromagnetic shield 30 rad lengths thick. This is followed by a thick scintillation counter. A leakage of a few percent simply creates a negligible inefficiency in counting electrons. Hadrons however see only 1.5 mean free paths for nuclear interaction. We believe the probability for a >>10 GeV hadron to fail to leak through this kind of shield to be extremely small. Again this will soon be measured at the AGS up to 20 GeV. This veto not only increases the pion rejection but also serves as a test of the Pb-Gl system. If we have a pion problem, the veto effect will measure it.

(6) Helium gas Cerenkov counters. We include a $\sim$ 40 ft long pipe starting close to the target and extending through the magnet. Helium at 1/4 atm yields $\approx$ 4 photoelectrons (PM with wave length shifter) but rejects pions rigorously up to 34 GeV and less efficiently up to $\sim$ 40 GeV. This is redundant but should help against particles scattered by the collimator and magnet surfaces. The optics is very simple and this device will insure that we are counting particles originating in the target. The light may be distributed among $\sim$ 10 PM's to keep the counting rate moderate.

4. Running Time and Logistics

Studying equation (8) we would now propose the following runs:

$E_p \cong 500$ GeV

$\sim 10^4$ pulses at each of 4 angles. We estimate the time required to move to a new angle to be $\sim$ 3 hours. Total time 4×10^4 pulses with $\sim 5 \times 10^{10}$ interactions/pulse. An internal target would have many advantages if the required space is available. This is about 120 ft down stream from the target, a transverse dimension of $\sim$ 12 ft and a vertical space, above or below the median plane, of $\sim$ 5 ft. Of course a wire target in a 5×10^{12} external primary beam, intercepting $\sim$ 1% of the protons is also suitable.

$E_p \cong 350$ GeV

3×10^4 pulses at each of 4 angles, as above

$E_p \cong 200$ GeV

5×10^4 pulses at each of 4 angles, as above plus testing time of the order of $\sim 10^5$ pulses. Here again, 5×10^{10} interactions per pulse are assumed.

In this phase, no special equipment is required from NAL except for shielding and skids to support the components. If a standard beam transport magnet is suitable, we would expect to borrow this from NAL or elsewhere. All detectors, logic, computer, etc. would be brought to NAL except for the share of equipment provided by the NAL collaborating group.

C. Phase II - Dileptons

Many of the devices described above are relevant to the pair experiment. Briefly, we would build two magnetic spectrometers to straddle a beam line, each subtending a horizontal aperture of ±25mr at 75 mr (200 GeV numbers are used throughout but can of course be scaled up) and a vertical aperture of ± 5 mr. These magnets are large; the bending is in the vertical plane to reduce the necessary strength. Again, Pb-Gl detectors shielded from the neutral beam are used to measure pair energies. With the precision cited above, we get a mass resolution

$$\frac{\Delta M}{M} \leqslant 1\%$$

from:

$$M^2 = 2p_+p_-(1-\cos(\theta_+ + \theta_-))$$

The arrangement is illustrated in Fig. 4. The magnets can be thin on the beam side since the flux from both magnets will cancel at the location of the proton beam. The magnets have the curious property of having a narrow "horizontal" aperture and a wide gap (see Fig. 5.). The 200 GeV incident beam now requires a ~ 100 GeV electron upper limit and the 4 m long magnet supplies a 20 mr bend for these particles. The dilepton backgrounds should be considerably smaller than the single arm search since most rejection factors are in quadrature. The 50 x 10 mr acceptance yields an average efficiency of 0.3% from curves equivalent to Fig. 2. If enough detectors are available to study both signs simultaneously, the efficiency is doubled. The need for a small target still limits the number of interactions to $\sim 5 \times 10^{10}$. We would hope this could be placed in the primary proton beam before a main target station.

Using a run of 5×10^5 pulses at 200 GeV now:

$$5 \times 10^{10} \times 5 \times 10^5 \times \frac{\sigma_{ee}}{30\text{mb}} \times 3 \times 10^{-3} = 100$$

yields a sensitivity of:

$$\sigma_{ee} = 4 \times 10^{-38}\ \text{cm}^2$$

The 100 events is taken because the background should be negligible. Dielectrons should be seen out to near the kinematic limit of ~ 20 GeV. The same arrangement now increases the sensitivity of the single electron W-search by a factor of about 100.

A comparison of the BNL data and the NAL data should give a very good account of the S-dependence and a reliable extrapolation to 500 GeV.

The instrumentation involved is extensive. To use both signs on both sides requires 100 ft^2 of Pb-Gl counters at an estimated cost of $300,000. The scintillation counters are more conventional. Detection efficiency can, however, grow as funds become available and the initial implementation of half the efficiency can be accomplished for an overall cost, including magnets, of $700,000. Stretched over 2 or 3 fiscal years and 3 institutions, this is not unreasonable.

We expect to emit a steady flow of addenda as our ideas mature.

We are not prepared at this time to allocate costs although it is clear that equitable sharing will be needed to carry out this program. "Everything is negotiable."

We acknowledge the assistance of Charles Baltay and Norman Christ in the preparation of this proposal.

REFERENCES

1 T.D. Lee and G. C. Wick, Nucl. Phys. B9, 209 (1969).

2 S. Drell and T. Yan, Phys. Rev. Letters, in press.

3 Altarelli, Brandt, and Preperata, private communication.

4 J. Christenson, G. Hicks, L. Lederman, P. Limon, B. Pope, and E. Zavattini, Phys. Rev. Letters, to be published.

5 F. Chilton, et al, Phys. Rev. 148, 1380 (1966).

6 Y. Yamaguchi, Nuovo Cimento, 43, 193 (1966).

7 A. Mann, NAL, SS-16 (2020).

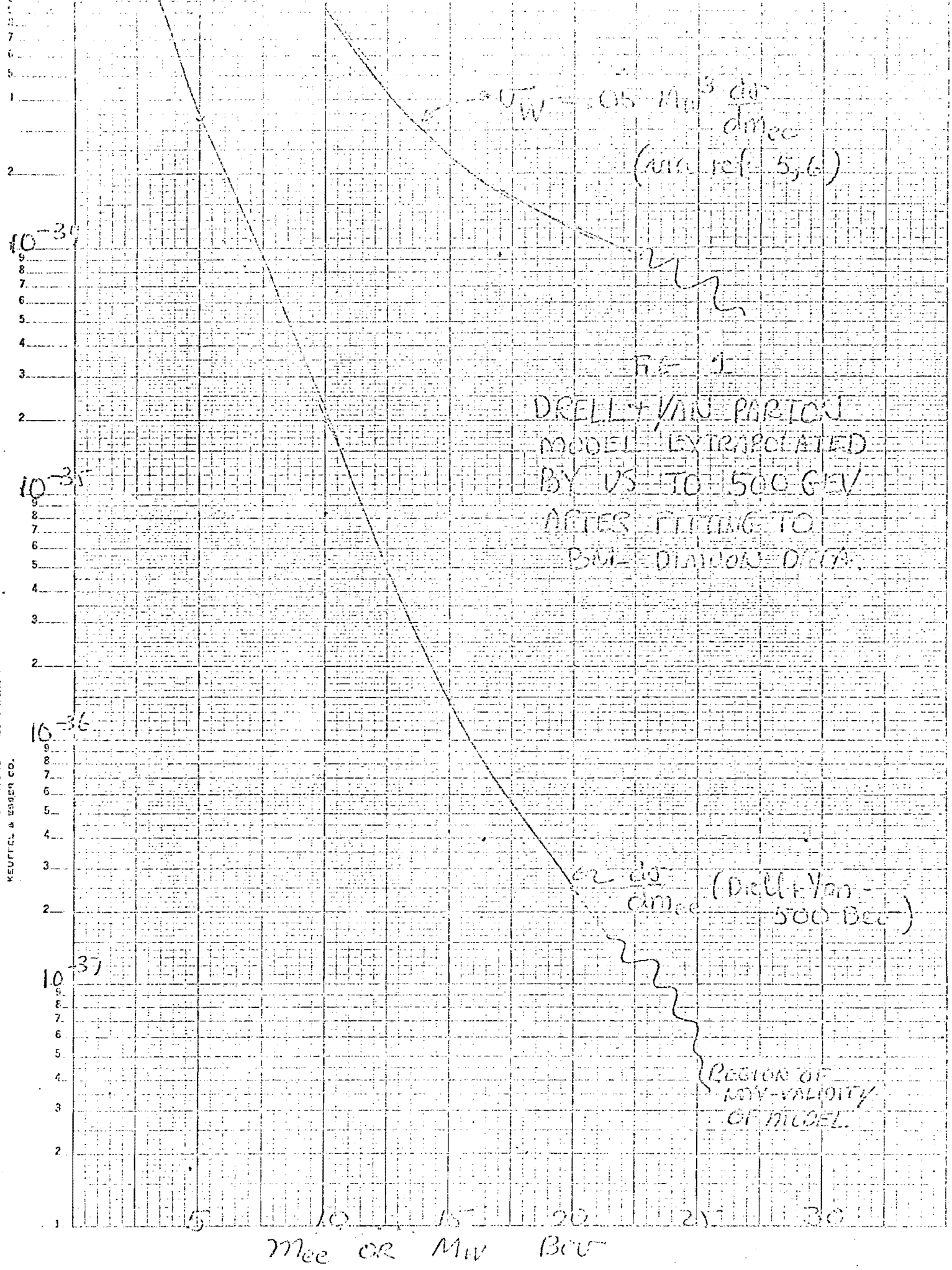

K+E SEMI-LOGARITHMIC 46 6212
5 CYCLES X 70 DIVISIONS MADE IN U.S.A.
KEUFFEL & ESSER CO.

FIG 2A

MONTE CARLO CALCULATIONS OF DETECTION EFFICIENCY FOR VARIOUS MODELS

APERTURE 8mr X 8mr

MINIMUM LAB P(electron) 50 GeV

$\bar{\theta}$ = 65mr

MODEL 2: W OR Dilepton has MAXIMUM AVAILABLE CM MOMENTUM BUT PEAKED FORWARD-BACKWARD ONLY

MODEL 4: W has UNIFORM CM MOMENTUM DISTR BUT PEAKED FORWARD-BACKWARD

MODEL 5: W HAS UNIFORM CM MOMENTUM DISTR BUT ISOTROPIC IN CM ANGLE

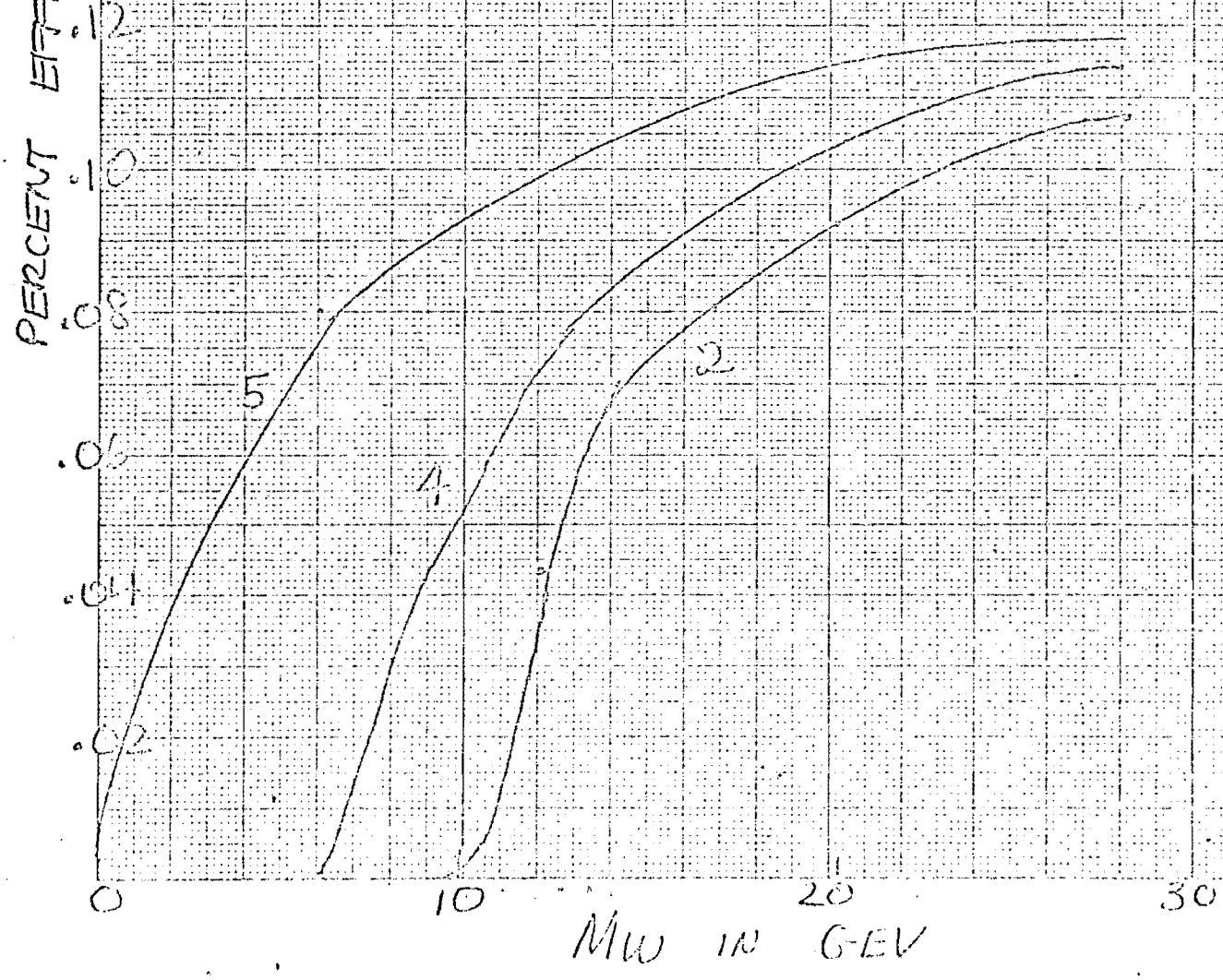

EUGENE DIETZGEN CO. MADE IN U. S. A.
NO. 341-M DIETZGEN GRAPH PAPER MILLIMETER

MODEL DATE

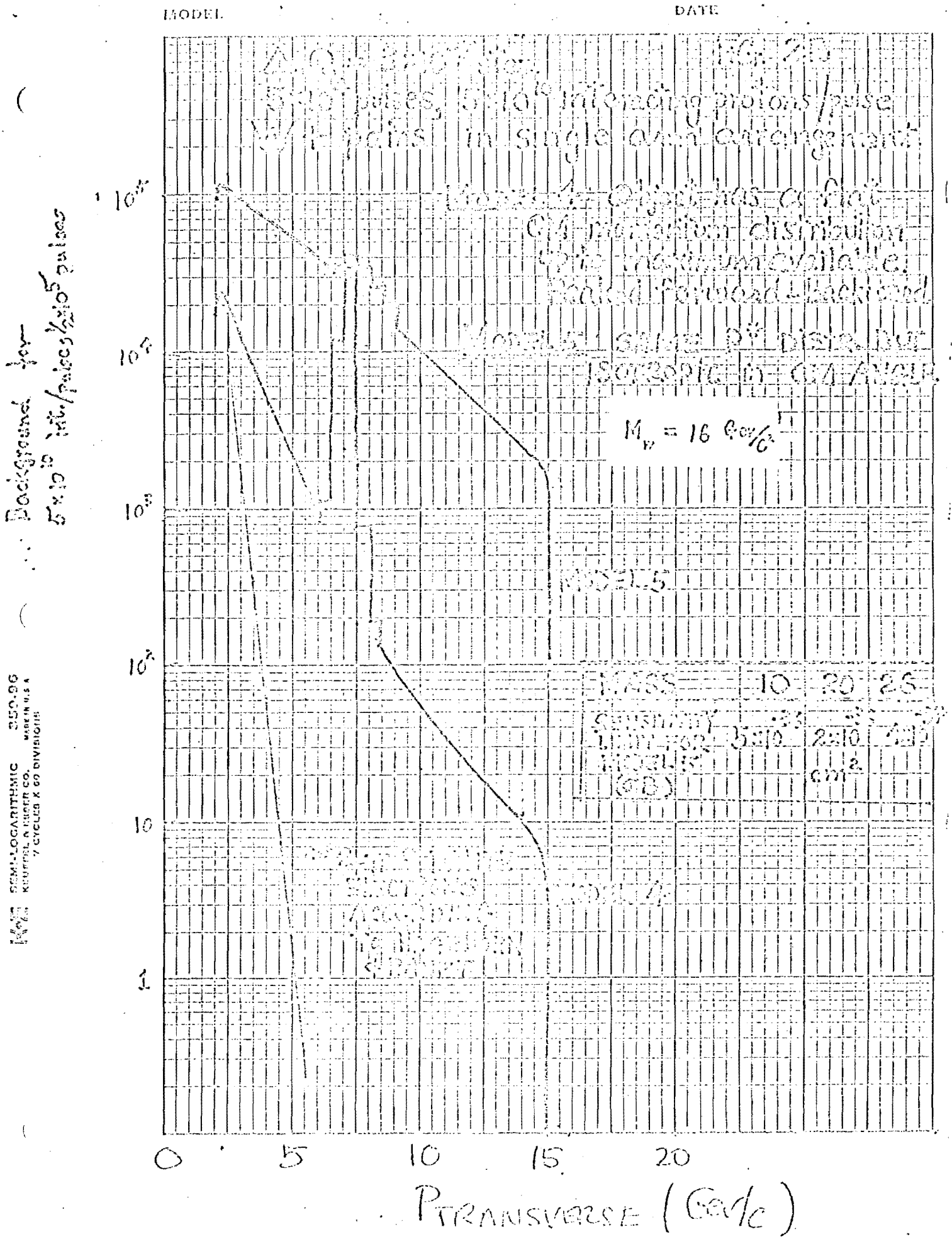

K&E SEMI-LOGARITHMIC 359-96 KEUFFEL & ESSER CO. MADE IN U.S.A. 7 CYCLES X 60 DIVISIONS

Fig 3
Beam Survey &
W,B Search.

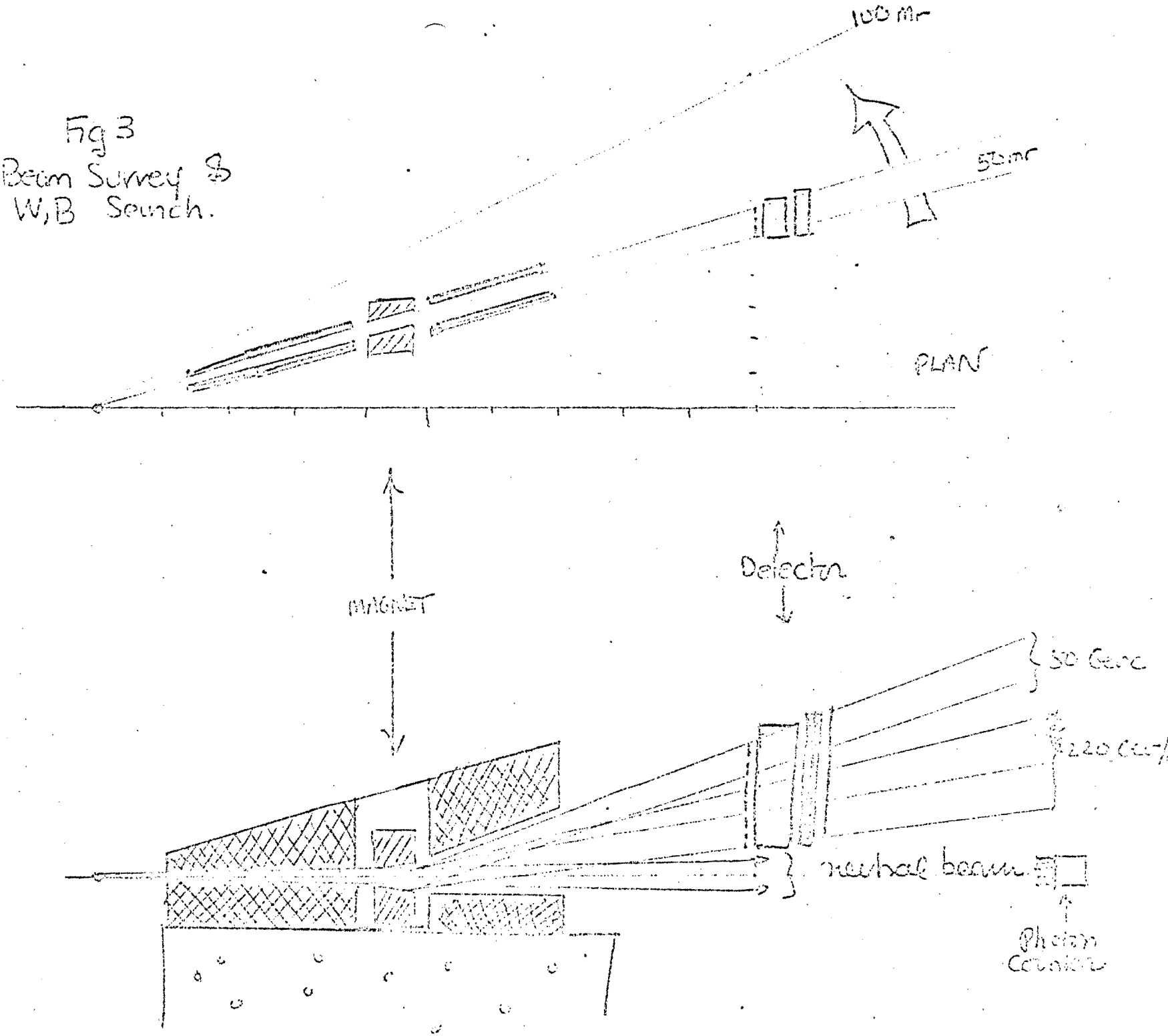

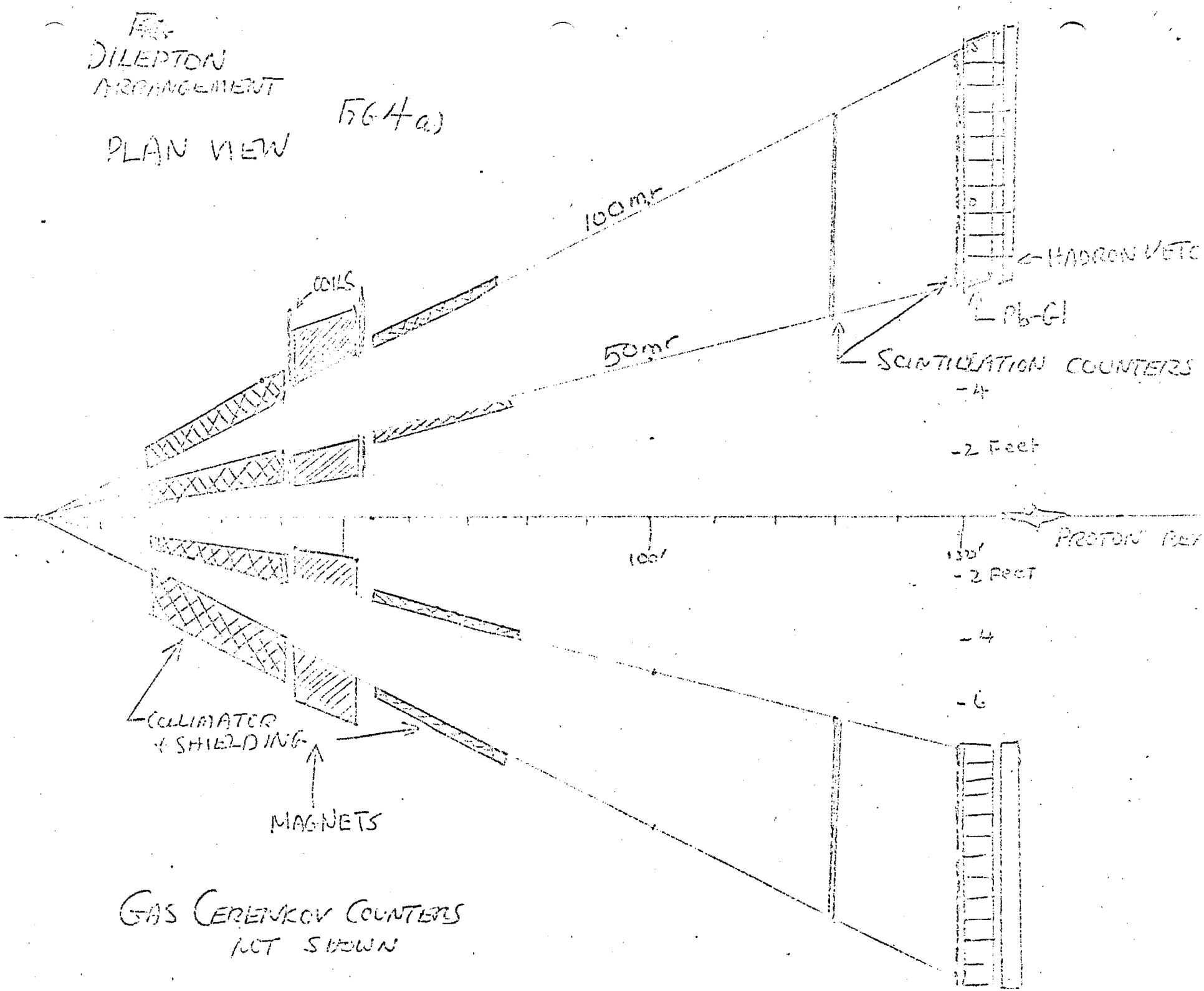
DILEPTON
ARRANGEMENT
PLAN VIEW
FIG 4(a)
100 mr
50 mr
COILS
HADRON VETO
Pb-Gl
SCINTILLATION COUNTERS
-4
-2 Feet
100'
130'
-2 FEET
-4
-6
COLLIMATOR
+ SHIELDING
MAGNETS
GAS CERENKOV COUNTERS
NOT SHOWN

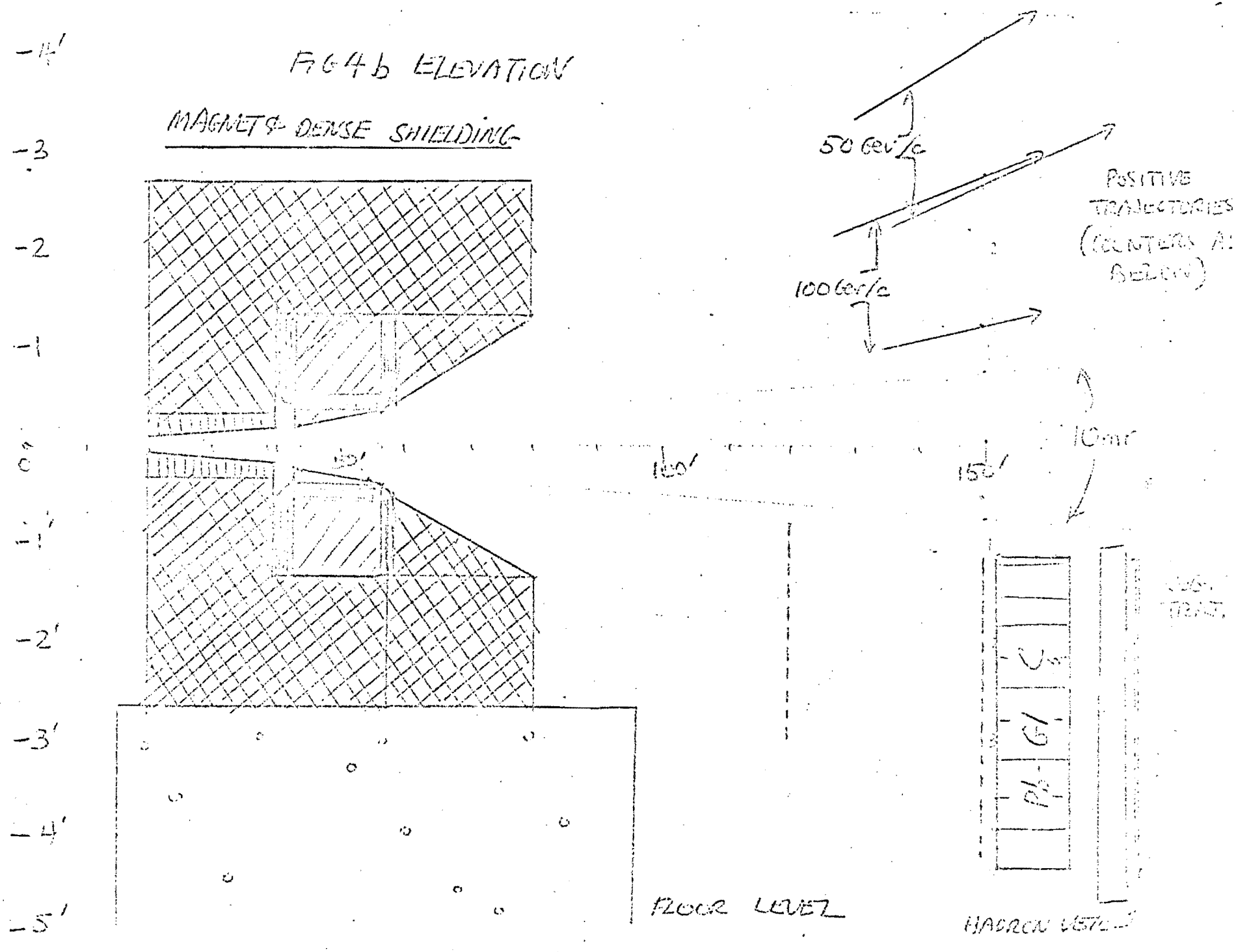

FIG 4b ELEVATION
MAGNET & DENSE SHIELDING
-4'
-3
-2
-1
0
-1'
-2'
-3'
-4'
-5'
50'
100'
150'
50 GeV/c
100 GeV/c
POSITIVE TRAJECTORIES (COUNTERS AS BELOW)
10mr
FLOOR LEVEL
HADRON VETO

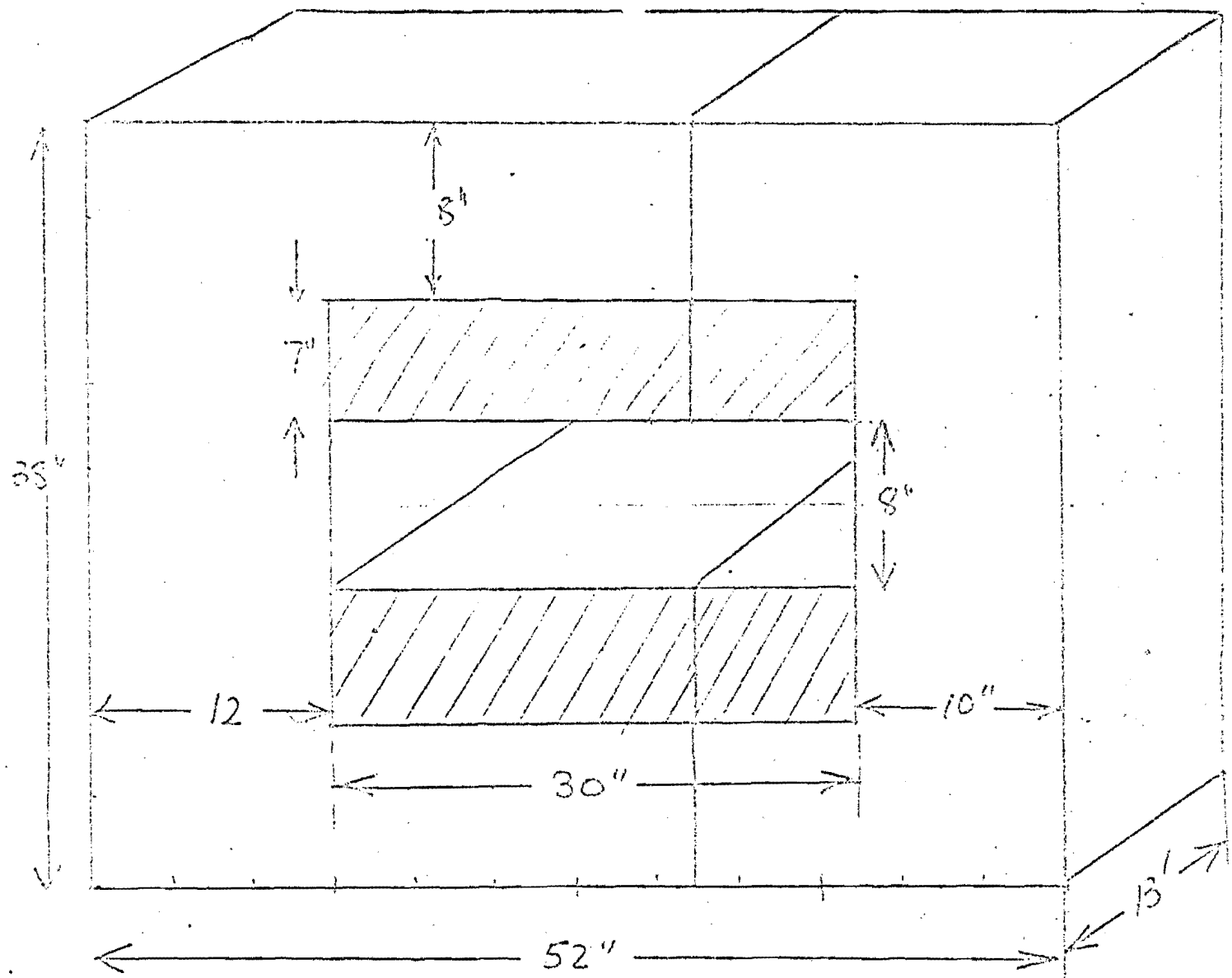

MAGNET DETAILS: FIELD IS HORIZONTAL: 15 KG
WT OF COPPER 6 TONS
WT OF IRON 30 TONS
FIELD IS SPLIT ASSYMETRICALLY TO FACILITATE COIL RETURN.

EST COST OF TWO: $150K

FIG 5