NAL PROPOSAL No. 259

Scientific Spokesmen:

R. Heinz
Physics Department
Indiana University
Bloomington, Indiana 47401

M. David
DPhPE, CEN-Saclay
B.P. n°2
91190 Gif/sur Yvette

BACKWARD PION-NUCLEON SCATTERING

R. Barate, P. Bareyre, P. Bonamy, P. Borgeaud, J.C. Brisson,
M. David, G. Ellia, J. Ernwein, J. Feltesse, G. Laurens, P. Le Du,
Y. Lemoigne, H. Roussarie, A. Roussarie, G. Villet,
Departement de Physique des Particules Elementaires, CEN-Saclay, France

B. Brabson, M. Corcoran, R. Crittenden,
R. Heinz, H. Neal, D. Rust,
Indiana University, Bloomington

D. Jovanovic
National Accelerator Laboratory, Batavia

October 16, 1973

BACKWARD PION-NUCLEON SCATTERING

R. Barate, P. Bareyre, P. Bonamy, P. Borgeaud, J.C. Brisson,
M. David, G. Ellia, J. Ernwein, J. Feltesse, G. Laurens, P. Le Du,
Y. Lemoigne, H. Roussarie, A. Roussarie, G. Villet,
Département de Physique des Particules Elémentaires, CEN-Saclay, France.

B. Brabson, M. Corcoran, R. Crittenden,
R. Heinz, H. Neal, D. Rust,
Indiana University, Bloomington.

D. Jovanovic,
National Accelerator Laboratory, Batavia.

ABSTRACT :

We propose to measure the cross sections for backward $\pi^{\pm}p$ elastic scattering for $|u| \leqslant 1$ $(GeV/c)^2$. The experiment will be performed in beam M5 with incident momenta ranging from 20 GeV/c to the 100 GeV/c region. The experimental apparatus consists of two spectrometers which determine the angles and momenta of the forward and backward outgoing particles. The detectors cover a large solid angle, 3 msr for the forward arm and 3 sr for the backward arm. They are designed to operate at incident beam rates of 1.0×10^7 particles/pulse and will measure cross sections down to the $nb/(GeV/c)^2$ range.

Oct 16th, 1973.

Correspondents :
R. Heinz, Physics Dept, Indiana Univ, Bloomington, Indiana 47401, and
M. David, DPhPE, CEN-Saclay, B.P. n°2, 91190 Gif/sur/Yvette.

PHYSICS INTEREST

In a simple billiard ball picture of πp backward elastic scattering, the π will strike the proton "head-on", thereby undergoing a large acceleration with, in general, the attendant radiation of hadronic matter. In a statistical analysis of this interaction, elastic scattering (no radiation) has to compete with other final states, resulting in a backward elastic cross section that will drop as a power law of s for fixed u. In this elegant yet simple picture of the interaction, a knowledge of the value of the power and its u dependence would be very interesting [1,2].

If hadronic matter contains parton seeds, backward πp scattering at high energies could be dominated by parton-parton scattering. This could lead to a break in the s-dependence of $d\sigma/du$, the break occurring where the dominate mechanism for the reaction changes. For example, Regge exchange might be primarily responsible for the reaction at lower s, $s \lesssim 80\ GeV^2 (P_{lab} \lesssim 40\ GeV/c)$, and parton-parton interactions, which presumably would fall more slowly with s, would then take over primary responsibility for backward πp scattering. This would most likely occur at large $(-u)$, say $u=-1.(GeV/c)^2$, where conventional baryon exchange amplitudes are low.

Since the birth of Regge theory about ten years ago, backward πp elastic scattering has been interpreted as arising from the exchange of baryon Regge trajectories in the u-channel. More recently, attempts have been made to improve this model by adding Regge cuts to the Regge poles [3]. Our data will make direct tests of important Regge predictions.

In a Regge model the cross section can be written as:

$$\frac{d\sigma}{du} = A(u)\ s^{2\alpha_{eff}(u) - 2}$$

where α_{eff} is the leading Regge trajectory in the Regge pole model, and is the effective trajectory in the Regge cut model. As s increases, the backward peak in a plot of $\frac{d\sigma}{du}$ vs. u should become steeper.

This "shrinkage" has not been observed below 20 GeV/c in backward $\pi^- p$ scattering, a particularly simple reaction from the Regge viewpoint since there is presumably just one leading trajectory (Δ_δ). If we observe no shrinkage in $\pi^- p$, the Regge pole model would be ruled out[3]. A particularly exciting aspect of backward $\pi^+ p$ scattering is the existence of a prominent dip at $u \approx -.2\ (\mathrm{GeV}/c)^2$. [4]. This dip occurs just where the leading trajectory (N_α) passes through a wrong signature nonsense point ($\alpha = -\frac{1}{2}$). Originally this dip was considered a triumph for the Regge pole model, although subsequently this structure was interpreted as due to an interference between the pole and the cut amplitudes. Already at 20 GeV/c a measurement of the dip will have a significant influence on the destiny of Regge models [3]. The various Regge exchange models make strikingly different predictions for the high s behaviour of $\frac{d\sigma}{du}$ away from 180°. For example at 50 GeV/c and $u = -1(\mathrm{GeV}/c)^2$, the predictions vary by an order of magnitude and these predictions are insensitive to the parameters in the models [3]. Quoting from the review paper of Berger and Fox [3] on Regge models for backward $(0 \lesssim -u \lesssim 1(\mathrm{GeV}/c)^2)\ \pi p$ scattering, "studies at 30 to 70 GeV/c should be immensely valuable".

The optical model, although usually associated with forward scattering, is intimately concerned with scattering at all angles - in particular, backward scattering. For example, Chu and Hendry show how the dip in backward $\pi^+ p$ scattering at $u \simeq -.2(\mathrm{GeV}/c)^2$ can be associated with a peripheral interaction whose contribution in the backward direction goes essentially as $J_o(R\sqrt{-u})$, where J_o is the usual Bessel function.[5]. A major drawback to the optical model has been its lack of built-in energy dependence. However, instead of summing contributions from different impact parameters one can use a closed form for an s-channel Regge pole, resulting in an optical model containing energy dependence. Work on this modified optical model is in progress [6], and our proposed experiment should provide a stringent test of the model, assuming it is different from the u-channel Regge pole prediction.

To our knowledge, there exists no data for backward πp elastic scattering at 20 GeV/c and above. Cross sections and especially polarization measurements can make a unique contribution to the under-

EXPERIMENTAL ARRANGEMENT

Beam

We propose to do the experiment in beam M5. The beam intensity we require is 10^7 particles/burst, which is possible for both beam polarities for momenta between 20 and 80 GeV/c with a momentum bite of $\lesssim(\pm.4\%)$ [7]. After the first phase of the experiment, for momenta $\lesssim$ 80 GeV/c, we wish to consider extending our measurements to $\sim$ 150 GeV/c. We propose to modify M5 to do this. We are currently considering ways to effect this change in M5. We require two DISC Cerenkov counters and one threshold Cerenkov in the beam. The threshold counter would be set to detect π's and would be used in the trigger in coincidence. One DISC counter would be for K's, in coincidence in the trigger. The other DISC, set for p's and $\bar{p}$'s, would be in anticoincidence for p's and in coincidence for $\bar{p}$'s. We request that NAL provide these counters as planned [7].

Two hodoscopes H_0 and H_1 measure the incoming pion direction. They are shown in Figure 1. They are located 1.7 m and 2.35m upstream of the center of the magnet "Goliath" which analyzes the backward scattered π. H_0 (4.0×4.0) cm^2 and H_1 (1.1×1.1) cm^2 both have logical units 1 mm wide.

Target

A liquid hydrogen target 1.5 m long will be supplied by Saclay. The target will be located inside the magnet "Goliath".

Forward Spectrometer

The forward proton is analyzed in a magnetic spectrometer. (See fig.1) The magnet "Mimosa", supplied by Saclay, is a C-magnet 20 cm high by 40 cm wide x 240 cm long with a bending power of 3.12 Tesla-meters (31.2 KG-meters). Figure 1 shows Mimosa in the 80 GeV/c position. At lower momenta, it would be moved closer to the LH_2 target to improve the solid angle. Thus we will move Mimosa in order to match the forward spectrometer solid angle and momentum resolution to the needs of the experiment, as shown in the following table :

Beam Momentum (GeV/c)	Mimosa Magnetic Field (KGauss)	Goliath-Mimosa Separation, Center-to-Center (m)	Mimosa Solid Angle (msr)	Forward Momentum Resolution (%)	Forward Angular Resolution (mr)
25.	13.	4.1	2.6	.9	.50
60.	13.	6.6	1.2	1.2	.25
80.	13.	8.1	0.9	1.3	.21

To deal with the high flux, two scintillator hodoscopes H_2 (10. × 6.0) cm^2 and H_3 (25.0 cm wide × 12.0 cm high) serve as detectors for the upstream lever arm. Note that both hodoscopes have a ±.5mm resolution. At 20 GeV/e they are located at 1.05 m and 2.4 m from the Goliath center respectively. H_2 is stationary and H_3 is attached to Mimosa and moves with it. In order to avoid the use of too many phototubes, those hodoscopes will overlap.

In connexion with Prof. Charpak we shall start tests on a small MWPC (15 × 15 cm) with a spacing of 0.5 mm between the read-out wires (diameter = 10μm). If it is verified that these chambers can tolerate the expected fluxes, having a time resolution approaching 10 nsec, we shall use them for the H_2 and H_3 hodoscopes.

The downstream 8 m lever arm is made up of two proportional wire chambers PC1 (50 cm wide x 22 cm high) and PC2 (90 cm wide x 40 cm high). They both have 1 mm wire spacing. C4 is a scintillator located just downstream of PC2. Two Cerenkov counters TC 1 and TC 2 are needed to reject the fast mesons at 80 GeV/c. TC 1, 4 m long, is located upstream of Mimosa magnet and should have an inefficiency of 5.10^{-3} at 80 GeV. TC 2, 8 m long, is placed between the proportional chambers PC 1 and PC 2. Its inefficiency should be of the order of 5.10^{-4}. Between 20 and 40 GeV/c only TC 1 is used, and it is located in the TC 2 position shown in Fig. 1. From 40 to 60 GeV/c, only TC2 is used. At 80 GeV/c or less, the global inefficiency is better than 10^{-7} and is sufficient to reject the fast forward mesons, which are of the order of 10^5 times more numerous than the protons. TC1 and TC2 can work for an incident momentum ranging from 20 to 100 GeV/c when filled with appropriate gas mixture near atmospheric pressure. The acceptance of the forward spectrometer is large enough so that the backward spectrometer determines the acceptance of the whole system.

The momentum acceptance of the forward spectrometer is $\gtrsim 0.5 P_i$ where P_i is the beam momentum. We plan to reduce this bite to $\gtrsim 0.75 P_i$ by using information from H3, PC1, and PC2 in the trigger. This will reduce the trigger rate from low momentum p's and from low momentum K's, for which the TC1 and TC2 efficiencies will be low because the K's are not far from threshold.

Backward Spectrometer

This spectrometer is of the non-focusing type and is capable of making a momentum analysis in the range of 0.3 GeV/c to 1.3 GeV/c for particles emitted between 75° and 180° in the laboratory. The solid angle subtended is of the order of 3 steradians.

The momentum dispersion is provided by the large magnet Goliath (fig. 1). This magnet will have a vertical field of 1.5 Tesla in a cylindrical gap 2 m in diameter and 1 m in height. The power requirement for Goliath is 1.3 megawatt.

To look at the backward meson trajectory we use 14 proportional wire chamber modules distributed on each side of the target and spaced 12 cm apart. Each module (1.8 m x 0.8 m useful area) consists of three planes of active wires 2 mm apart, the first being horizontal, the second vertical, and the third inclined at 15° with respect to the horizontal plane. All the modules are mechanically standard, but only the wires which lie in the useful solid angle are equipped with electronics.

The backward spectrometer has a momentum resolution and angular resolution which are independent of the beam momentum. Their u-dependence and the resolution of u are given in the following table :

u Range $(GeV/c)^2$	Momentum Resolution (%)	Angular Resolution (mr)	u Resolution $(GeV/c^2$
$0 \rightarrow -.4$	1.5	8	.015
$-.4 \rightarrow -.8$	2.0	8	.04
$-.8 \rightarrow -1.2$	2.5	8	.06

TRIGGER, YIELD, BACKGROUND

The trigger requires at least one charged particle in each spectrometer and none outside the solid angle covered by the wire chambers. This condition is fulfilled when :

- the beam (H_0 H_1) is in coincidence with a forward scattered particle (H_2 H_3 C_4) and a backward scattered particle (fast OR pulse of the proportional chambers closest to the target) ;

- no veto comes from the anticoincidence counters AC1, AC2, AC3 (see fig. 1.);

- no fast particle is detected by the two forward Cerenkov counters TC1 and TC2.

The counter C4 has a hole in order to let the beam through. In the case of negatively charged incident particles this hole lies outside the trajectory of the scattered protons; when a positive beam is used some of the protons scattered at small u escape through the hole. The chamber PC2 has a dead zone in front of the hole. PC1 has a dead zone in the path of the beam. If H_3 is a proportional chamber, it will also have a dead zone.

Accidental triggers will be severely depressed by using a fast beam scintillator (Pilot U with a decay time of 1.3 nsec) and appropriate photomultiplier and fast electronics logic to detect beam particles separated in time by $\gtrsim$ 2 nsec. This counter will be used as an updating (10 nsec wide) pile-up gate. (This will cause a 10 % system dead time.). If pairs of particles separated in time by $\lesssim$ 2 nsec are a problem, they can be eliminated with an anticounter having a threshold set just above the single particle pulse height.

Triggers will be caused by inelastic channels having a fast, forward proton. We estimate the trigger rate at 60 GeV/c caused by these channels by assuming that the shape of the mass spectrum of the backward meson system recoiling from the proton

has an s dependence given by the data at 8 and16 GeV/c [8]. Taking the momentum acceptance of our forward spectrometer to be $\geq \frac{3p}{4}$ and making a reasonable estimate for the s-dependence of the backward elastic peak [9] we find a trigger rate of 150 triggers/pulse at 60 GeV/c. We interpret this trigger rate as an upper limit, as the requirements of a backward pion and an absence of counts in the anti-counters have not been imposed.

δ rays energetic enough to reach the first proportional chamber in Goliath occur for 8 % of the beam. Depending on the interaction of each beam π, these δ rays will cause some triggers. δ rays which accompany elastic events will be filtered in the analysis.

Our data handling system will be designed to handle 450 events per spill, a number more than an order of magnitude higher than the trigger rate which we expect to have. In order to give an idea of the amount of data which must be handled in this experiment, we use the following figures :

- number of wires : 22900 ;
- number of hodoscope elements : 414 ;
- number of wire pulses/event : 50 ;
- maximum number of events per spill : 450.

The information in the chambers is transfered in sequence onto a bus line by means of 8-bit words at each pulse of a ten megacycle clock. The total transfer time is ten microseconds. These data will be encoded into 50 16-bit words. An additional 16 words are used for the information pertaining to the hodoscopes. The total acquisition time will be 120 μs per event in our PDP 11-45 equiped with a MOS memory.

Special fast electronics connected to the two wire planes closest to the target as well as a simple treatment by the computer will allow rough checks for good spatial and kinematical correlations. This will permit us to filter the events before storage on magnetic tape for later off-line analysis.

The yield of elastic scattering events can be estimated by fitting low energy data and extrapolating the fit to high energy using a parametrization consistent with Regge behaviour. From Ref. 9 we take the form :

$$\frac{d\sigma}{du} = K\ p_{lab}^{-n}\ A\ e^{Au}\quad \mu b/(GeV/c)^2\ ,$$

where K = 58, n = 2, and A = 4 and p_{lab} and u are expressed in GeV/c and $(GeV/c)^2$. The efficiency of our system is essentially independent of u. The overall azimuthal acceptance is typically 40 % and varies slightly with s. Assuming an 8 % loss due to final state interactions and a 10 % loss due to system dead time, we have a global efficiency which varies from 21 to 32 %. Using the estimated M5 beam characteristics, with appropriate corrections for 300 GeV/c primary protons, the yield of backward elastic events can be determined. These yield results, based on a 100 hr running period and a security factor of .5, are given in the following table. (We take a maximum of 10^7 particles/pulse. The table indicates the percentage of 10^{13} primary protons which are needed at each momentum, as well as other relevant data mentioned above.).

	Momentum (GeV/c)	Global efficiency	π's/burst	% of 10^{13} primary protons	$\Delta\sigma_{\mu b}$	Yield/100 hours
π^+	20	0.207	$8.5\ \times 10^6$	10	$14.5\ \times 10^{-2}$	$4.5\ \times 10^4$
	40	0.307	$6.\ \times 10^6$	11.6	$3.63\ \times 10^{-2}$	$1.2\ \times 10^4$
	60	0.307	$3.4\ \times 10^6$	25	$1.61\ \times 10^{-2}$	$.30\ \times 10^4$
	80	0.307	$3.35\ \times 10^5$	62	$0.91\ \times 10^{-2}$	$.16\ \times 10^4$
π^-	20	0.207	$8.\ \times 10^6$	11	$14.5\ \times 10^{-2}$	$4.2\ \times 10^4$
	40	0.315	$8.\ \times 10^6$	50	$3.63\ \times 10^{-2}$	$1.6\ \times 10^4$
	60	0.315	$8.\ \times 10^6$	73	$1.61\ \times 10^{-2}$	$.70\ \times 10^4$
	80	0.315	$2.6\ \times 10^6$	100	$0.91\ \times 10^{-2}$	$.13\ \times 10^4$

Thus with 800 hours of running, or 100 8-hour shifts, we will obtain 1000 to 40 000 backward elastic events at each of four momenta for π^+p and π^-p.

In order to estimate the background in our final data sample, we have written an analysis program for the experiment and have used it to fit elastic and inelastic events generated by a Monte Carlo program. (This program was used to determine the spatial and angular resolution of the forward and backward arms.). The reaction most likely to simulate elastic scattering is the production of a backward meson system with low effective mass. We find that for a meson effective mass in the range .285 to .55 GeV, the probability of being a background event (i.e., surviving the χ^2 cuts determined by fitting elastic events) is 3 %. This result does not use any information from the beam hodoscopes, and is therefore pessimistic. For higher masses (1.0to 1.2 GeV), this probability drops to .2 %. Using the direction of the incoming pion this background reduces to 0.5 % and to 0.0 %, respectively. Based on the 16 GeV/c data [8] and on the faith that nature is not cruel, we expect to encounter background at the few percent level; of course, if the background is an order of magnitude worse than this, we could subtract it accurately enough so that the resulting systematic error would be small compared to the statistical error.

ADDITIONAL PHYSICS OBJECTIVES

During the experiment on backward πp scattering we will simultaneously collect data on the very interesting backward $K^{\pm}p$ reactions and on backward $\bar{p}p$ scattering. Other reactions that we are interested in studying are :

$$\bar{p}p \to \pi^+\pi^-$$

$$\bar{p}p \to K^+K^-$$

$$\pi^+ n \to p\pi^\circ$$

$$\pi^+ n \to p\eta^\circ$$

$$K^+ n \to pK^\circ$$
$$\hookrightarrow \pi^+\pi^-$$

$$\pi^+ n \to p\rho^\circ$$
$$\hookrightarrow \pi^+\pi^-$$

$$\pi^\pm p \to N^*\pi^\pm$$
$$\hookrightarrow p\pi^\circ$$

$$\pi^+ p \to \Sigma^+K^+$$
$$\hookrightarrow p\pi^\circ$$

$$K^- p \to \Sigma^+\pi^-$$
$$\hookrightarrow p\pi^\circ$$

$$\pi^\pm p \to p\ ,\ A_1^\pm\ ,\ A_2^\pm\ ,\ B^\pm$$

For the reactions producing a π° or an η° five lead plates (0.4 radiation length each) are inserted between the wire planes of the backward spectrometer. The total detection efficiency drops by a factor of thre with respect to the charged channels. For reactions on a neutron the target will be filled with deuterium.

After the elastic cross-section measurements we intend to replace the hydrogen target by a polarized target without changing anything else in the apparatus. In this case the measurable domain shrinks somewhat. However, essential information will be gained with regard to the confused situation in the baryon exchange of natural and unnatural parity.

A careful examination of the possibility of using a polarized target in our magnet has shown that the best way is to use a conventiona butanol polarized target. This implies the use of shims of limited size in order to have a $dB/B = 4.10^{-4}$. The homogeneity of the field in the momentum measurement region is not drastically altered. Goliath would be powered with 2 MW . With the 18 kG field the butanol target will reach a 70 % polarization. The shimmed magnet and the polarized target are sketched in fig. 2. With a target of 20 cm long the interaction rate is 7.0 times less than with our hydrogen target.

If the kinematical constraints given by the apparatus do not allow a clean rejection of events produced on bound protons from those produced on free polarized protons, the polarization measurement is still possible by the subtraction method. In that case the accuracy on P is given roughly by

$$\Delta P \simeq \frac{1}{P_t} \sqrt{\frac{2}{\rho \cdot N_H}}$$

where ρ is the ratio of events on free protons to events on free + bound nucleons fitting elastic scattering, P_t is the target polarization and N_H the number of events on free protons. Monte Carlo calculations using the above mentionned resolutions show that $\rho \simeq 0.6$ instead of $\rho \simeq .25$ when the events on free protons cannot be separated by fit.

If the necessary technological development occurs in time, we plan to use a frozen spin target such as the one now being tested at CERN. With this propanediol target ($C_3H_8O_2$) Goliath can be powered at just 1 MW. In the frozen spin technique the protons are

polarized in an auxiliary dipole which has the required field strength and which is located near the beam axis at the entrance of the Goliath magnet. The polarized target is then transferred into the Goliath magnet for the scattering experiment. The polarization decreases with time as :

$$P(t) \doteq P_o \, e^{-t/T_o} \quad .$$

P_o is the initial polarization, averaging 80 %.
T_o is the relaxation time which is dependent on Goliath's holding field and on the target temperature. We anticipate having a T_o of about 24 hours.

LOGISTICS

We would like N A L to provide :

- Cerenkov counters for the beam particle identification ;
- the power supplies for the Goliath and Mimosa magnets (see below) ;
- The refrigerator and controls for the liquid hydrogen target.
- Standard fast electronics logic.

The Goliath magnet floor surface is 4.8 x 4.8 m^2 ; the gap center is 154 cm above the ground ; this takes into account the tripod which is 23 cm high and can be removed if necessary. At full power the running voltage is 600 V and the water cooling system requires 80 m^3/h at 22 kg/cm^2. The total weight is 250 metric tons.

The Mimosa magnet which could be loaned from the Saturne Department has the overall dimensions of 303 cm x 155 cm x 245 cm. For a field of 1.4 T, the voltage is 290 V with a power of 150 KW. The water pressure is 15 kg/cm^2 at 3.5 m^3/h delivery.

We will provide :

- all the phototubes and scintillators ;
- the proportionnal chambers ;
- the downstream Cerenkov counters ;
- associated electronics and cables ;
- the targets ;
- the computer (PDP 11-45).

All the electronic equipment including the PDP 11-45 computer, the tape units, the teletype and the other displays would be installed in a trailer. The total floor area required is approximately 9 x 25 m^2.

The construction of the different parts of the apparatus could be achieved by Fall, 1974. We intend to do a complete test of the backward spectrometer at the Saturne accelerator by measuring $\pi^+ p \rightarrow p\pi^+$ at 2 GeV/c. Then we could move to N A L at the end of 1974.

REFERENCES

1. R. P. Feynman, Phys. Rev. Letters 23, 1415 (1969).
2. R. P. Feynman, private communication.
3. E. L. Berger and G. C. Fox, Nuclear Physics B26, 1 (1971).
4. J. P. Chandler, R. R. Crittenden, K.F. Galloway, R. M. Heinz, H. A. Neal, K. A. Potocki, W. F. Prickett, and R. A. Sidwell, Phys. Rev. Letters 23, 186 (1969).
5. S-Y Chu and A. Hendry, Phys. Rev. Letters 25, 313 (1970) and Phys. Rev. D4, 2743 (1971).
6. S-Y Chu and A. Hendry, to be published.
7. Meson Laboratory Preliminary Design Report, March 1971, J. R. Orr and A. L. Read, NAL.
8. E. W. Anderson et al., Phys. Rev. Letters 22, 1390 (1969) and Phys. Rev. Letters 22, 102 (1969).
9. "Differential Cross Sections for some Two-body and Quasi two-body Reactions Extrapolated to high Energy," Saclay Working Group, ECFA/WG/72-83.

FIGURE CAPTIONS

FIGURE I, Side and top views of the apparatus

- H_0, H_I, H_2, H_3 : scintillator counter hodoscopes
- PC I, PC 2 : proportional wire chambers
- TC I, TC 2 : atmospheric pressure gas Cerenkov counters
- AC I, AC 2, AC 3 : anticoincidence counters
- C4 : forward scattered proton coincidence counter.

The beam dispersion corresponds to the gray zone. The forward scattered proton for $p = 80$ GeV/c and for $0 > u > -1.3$ $(\mathrm{GeV}/c)^2$ covers the hatched zone.

FIGURE 2, Goliath with shims and a polarized target.

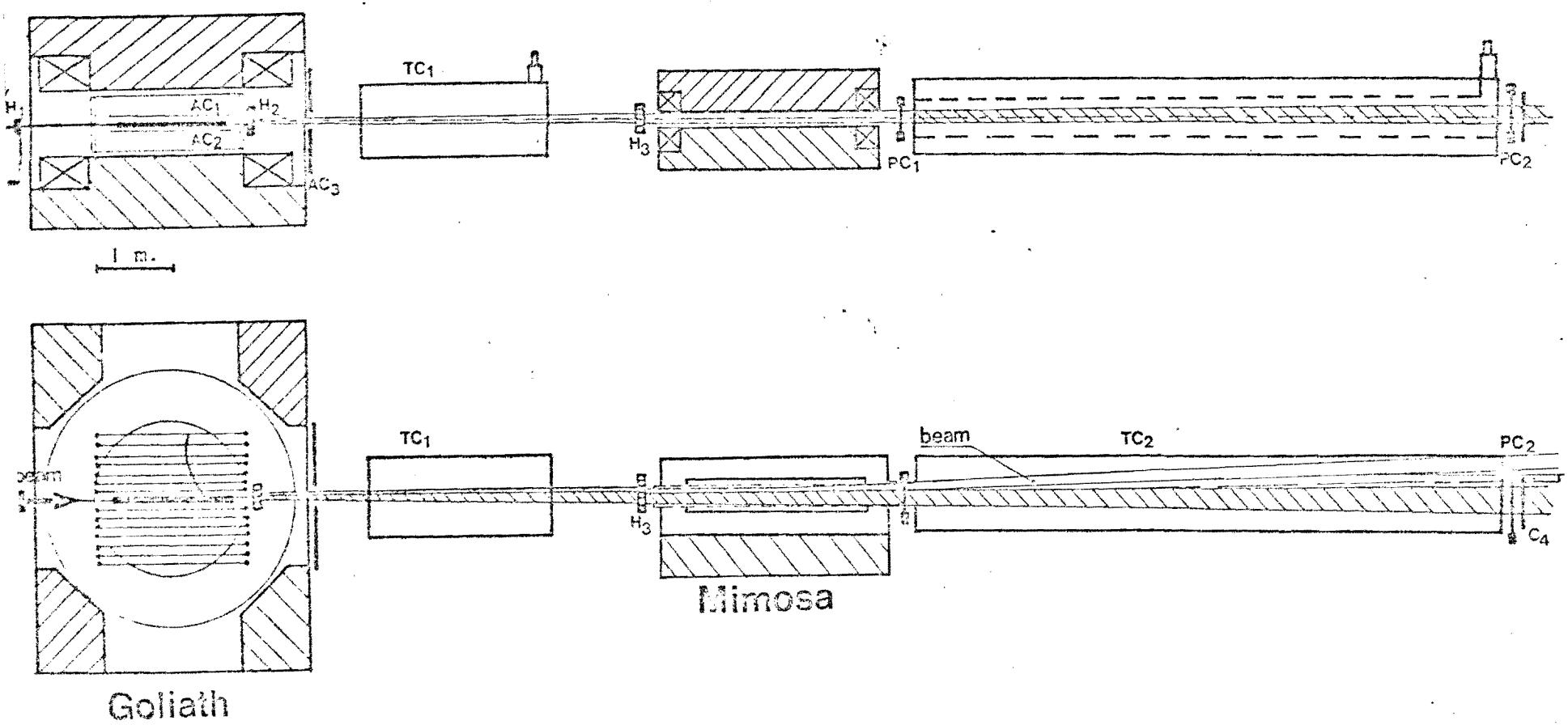
TC1
H1
AC1
H2
AC2
AC3
H3
PC1
PC2
1 m.
TC1
beam
TC2
PC2
H3
C4
Mimosa
Goliath

Fig 1

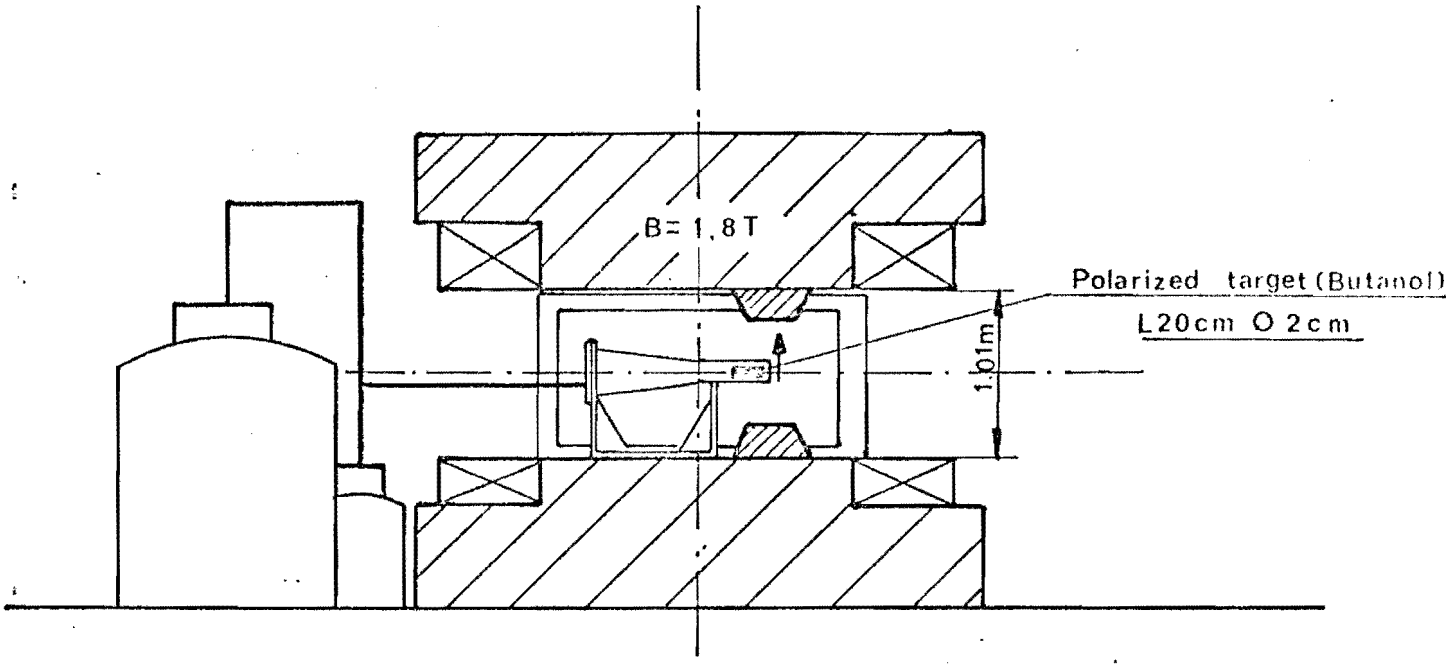
B= 1.8 T
Polarized target (Butanol)
L20cm O 2cm
1.01m

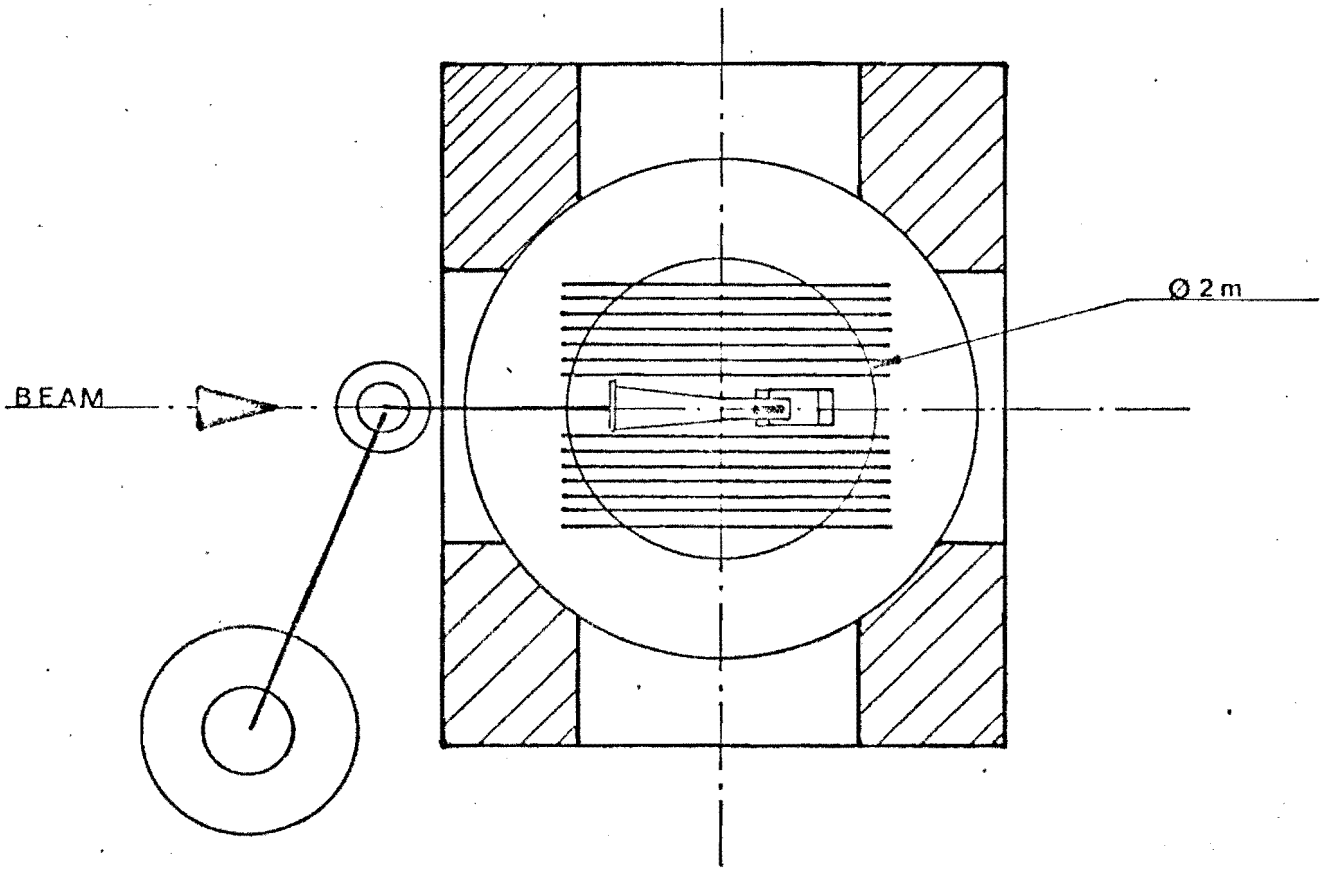
Ø 2m
BEAM