NAL PROPOSAL No. 212

Scientific Spokesman:

M. David
CEN-Saclay
B.P. n°2
91190 GIF/sur/YVETTE
France

MEASUREMENT OF BACKWARD 2-BODY AND QUASI-2-BODY REACTIONS INDUCED ON UNPOLARIZED AND POLARIZED PROTONS BY $\pi^{\pm}$, $K^{\pm}$, p RANGING FROM 20 to 100 GeV/c

R. Barate, P. Bareyre, P. Bonamy, P. Borgeaud, J.C. Brisson, M. David, G. Ellia, J. Ernwein, J. Feltesse, G. Laurens, P. Ledu, Y. Lemoigne, H. Roussarie, A. Roussarie, G. Villet

Departement de Physique des Particules Elementaires
CEN-Saclay, France

May 1973

PROPOSAL TO THE NAL

MEASUREMENT OF BACKWARD 2-BODY AND QUASI-2-BODY REACTIONS INDUCED ON UNPOLARIZED AND POLARIZED PROTONS BY $\pi^{\pm}$, $K^{\pm}$, p RANGING FROM 20 TO 100 GeV/c

R. Barate, P. Bareyre, P. Bonamy, P. Borgeaud, J.C. Brisson, M. David, G. Ellia, J. Ernwein, J. Feltesse, G. Laurens, P. Ledu, Y. Lemoigne, H. Roussarie, A. Roussarie, G. Villet.

Département de Physique des Particules Elémentaires(+), CEN-Saclay, France.

ABSTRACT :

We propose to build a scattering apparatus to measure, in the 20-100 GeV/c momentum range, two-body and quasi-two-body baryon exchange reactions for $-u_{min} \leq -u \leq 1 (GeV/c)^2$. The apparatus consists of two spectrometer arms which determine the angles and momenta of the forward and backward outgoing particles.

The detectors cover a wide solid angle and are designed to operate at incident beam rates of up to 2.10^7/sec in order to match cross sections in the nb/$(GeV/c)^2$ range.

May 10th, 1973.

Correspondent : M. DAVID, D.Ph.P.E., CEN-Saclay
B.P. n°2
91190 GIF/sur/YVETTE - FRANCE

(+) Collaboration with other laboratories is under discussion.

I - INTRODUCTION

In this experiment we propose to measure some of the two body and quasi-two-body baryon exchange reactions induced by π, K, $\bar{p}$, on protons (unpolarized and polarized) in the 20-100 GeV energy region.

In this particular region and for $-u_{min} < -u < 1 (GeV/c)^2$ the predicted cross sections are in the $nb/(GeV/c)^2$ range. These reactions are all characterized by a baryon strongly focused in the forward direction and by a backward meson of small momentum emitted in a wide solid angle. In order to allow measurements down to such low cross sections, a very high incident flux (2.10^7 part/sec) and a low dead time detector are needed.

In addition, to separate these low rate reactions from the background, we need a kinematical overdetermination (4C-fit) which requires spatial and momentum analysis on both outgoing particles. This can be done by using two spectrometers, one having a wide solid angle.

In order to avoid prohibitive running time at the different incident energies, we intend to use a trigger loose enough to accept all the wanted reactions. Thus an apparatus with a high acquisition rate is required.

II - PHYSICS JUSTIFICATION

By using the experimental set-up we describe in the following chapter, we will be able to determine at least two important parameters in a new energy region : the cross sections $d\sigma/du$ and the polarization parameter P. A number of reactions can be measured simultaneously :

$$\pi^+ p \rightarrow p\pi^+$$

$$\pi^- p \rightarrow p\pi^-$$

$$K^+ p \rightarrow pK^+$$

$$\bar{p}p \rightarrow p\bar{p}$$

$$\bar{p}p \rightarrow \pi^-\pi^+$$

$$\bar{p}p \rightarrow K^-K^+$$

-For the above-mentioned reactions our first aim is to obtain the s and u dependence of the cross sections which requires measurements at different energies in a sizable u-momentum transfer range. As the computed efficiency of the proposed apparatus is almost independent of u, we shall also be able to study the behaviour as a function of u of the strong structures already observed at low energies in some channels.

In the framework of the present models which give widely divergent predictions at high energies, the set of reactions we want to study should provide very rigorous checks for Regge Pole models, SU_3 predictions and symmetry breakings.

-In a second stage we intend to replace the hydrogen target by a frozen polarized target without changing anything else in the apparatus and we plan to measure the polarization parameter P for the same reactions. In this case the measurable domain shrinks somewhat, however, essential information will be gained with regards to the confused situation in the baryon exchange of natural and unnatural parity.

In chapter V we calculate the s and u domain in which measurements can be performed for each reaction. Not included in this proposal are the reactions listed below which could be measured with slight changes of the apparatus. We discuss these modifications in chapter III.

a) $\pi^+ n \to p\pi^\circ$

$\pi^+ n \to p\eta^\circ$

$K^+ n \to pK^\circ$
$\quad\quad\quad \hookrightarrow \pi^+\pi^-$

$\pi^+ n \to p\rho^\circ$
$\quad\quad\quad \hookrightarrow \pi^+\pi^-$

b) $\pi^\pm p \to N^*\pi^\pm$
$\quad\quad\quad \hookrightarrow p\pi^\circ$

$\pi^+ p \to \Sigma^+ K^+$
$\quad\quad\quad \hookrightarrow p\pi^\circ$

$K^- p \to \Sigma^+\pi^-$
$\quad\quad\quad \hookrightarrow p\pi^\circ$

c) $\pi^\pm p \to p\ ,\ A_1^\pm\ ,\ A_2^\pm\ ,\ B^\pm$.

III - EXPERIMENTAL ARRANGEMENT

The beam

We need a secondary particle beam with a momentum capability ranging from 20 to 100 GeV/c for both polarities and with high intensity. We expect to be able to handle 2.10^7 part/sec.

-The M1 and M6 beams easily meet these requirements, whereas the M5 beam could also be used satisfactorily.

Therefore we have calculated the expected triggering rates for two possible beams (M5 and M6).

We need two suitable Čerenkov counters in the beam in order to identify the incoming particles (π, K, p).

The beam will have to be carefully shielded to reduce the halo to a minimum and to protect our detectors from prohibitive background.

-In order for the beam to be kept in a stationary position at the target with the change in beam momentum, two steering magnets ($\sim$ 2 Tesla-meters) have to be placed in the last section of the beam.

Experimental set-up

The proposed apparatus is shown in figure 1. It consists of a high momentum spectrometer in the forward direction which analyzes the proton always emitted with an angle less than 44 mr in the laboratory. Two threshold Čerenkov counters used to eliminate the numerous π's and K's emitted in the forward direction are also provided. A wide solid angle backward spectrometer surrounding

the target analyzes the scattered meson for angles between 75° and 180° in the laboratory. The meson momentum, nearly independent of the beam energy, ranges from 0.35 to 1.3 GeV/c. For the entire apparatus the particle trajectories are materialized either by scintillator hodoscopes in the beam region or by proportional wire chambers.

A) The forward spectrometer

In dealing with the forward spectrometer we are faced with four main difficulties :

- the high flux of particles (which are not always separated in space from the outgoing beam) emitted in a small forward cone requires delicate handling ;
- an extremely good rejection of all particles faster than the forward proton is necessary ;
- a wide solid angle (3 mster) is required to cover the entire u-domain between u_{min} and $-1.0(GeV/c)^2$;
- the proton momentum components must be determined with good accuracy.

By not requiring a too high bending power, we can avoid prohibitive transversal dimensions of the forward spectrometer elements. Instead, compensation must be made by a good spatial resolution of the associated detectors.

The momentum analysis within the 3 mster solid angle is provided by the C-magnet MIMOSA (20 cm high x 40 cm wide x 240 cm long) with a total effective field of 3.12 Tesla-meters.

To deal with the high flux, two scintillator hodoscopes H_2 (4.4 x 3.8)cm^2 and H_3 (14.0 cm wide x 9.0 cm high) serve as detectors for the upstream lever arm. Note that both hodoscopes have a 1 mm resolution and are located at 0.5 m and 1.65 m from the target center respectively. In order to avoid the use of too many phototubes, those hodoscopes will overlap.

The downstream 8 m lever arm is made up of two proportional wire chambers PC 1 (40 cm wide x 20 cm high) and PC 2 (90 cm wide x 45 cm high). They both have 1 mm wire spacing. Both Čerenkov counters TC 1 and TC 2 are needed to reject the fast particles. TC 1, 4 m long, is located mainly in the MIMOSA magnet and should have an inefficiency of 5.10^{-3} at 100 GeV. TC 2, 8 m long, is placed between the proportional chambers PC 1 and PC 2. Its inefficiency should be of the order of 5.10^{-4}. The global inefficiency would then be sufficient to reject the fast forward particles which are of the order of 10^5 times more numerous than the protons. TC 1 and TC 2 can work for an incident momentum ranging from 20 to 100 GeV/c when filled with H_e, N_e or N_2 gas near the atmospheric pressure.

This spectrometer has a 100 % azimuthal acceptance except at the lowest energies, but even in this case it is the backward spectrometer which limits the global acceptance.

B) The backward spectrometer

This spectrometer is of the non-focusing type and is capable of making a momentum analysis in the range of 0.3 GeV/c to 1.3 GeV/c for particles emitted between 75° and 180° in the laboratory. The solid angle subtended is of the order of 3 steradians.

The momentum dispersion is provided by the large magnet GOLIATH (fig. 2). This magnet can reach a field of 2.0 Tesla in a cylindrical gap 2 m in diameter and 1 m in height. The field versus the power is shown in figure 3 .

We have performed a Monte-Carlo simulation of the experiment in order to determine the best possible direction of the GOLIATH field in relation to the beam line. It appears that for a field parallel to the beam, the mean acceptance is not better than for our adopted geometry, even if we would be able to build cylindrical proportional chambers. Furthermore with the "Solenoïd" configuration the range of u is limited to $-u>0.2(GeV/c)^2$, and a polarized target cannot be used to measure the P parameter.

To look at the backward meson trajectory we use 24 proportional wire chamber modules distributed on each side of the target and spaced 12 cm apart. Each module (1,8 m x 0,8 m useful area) consists of three planes of active wires 2 mm apart, the first being horizontal, the second vertical, and the third inclined at 15° with respect to the horizontal plane. All the modules are mechanically standard, but only the wires which lie in the useful solid angle are equipped with electronics.

C) Targets

The liquid hydrogen (or deuterium) target is a cylinder (Ø 2 cm x 70 cm length) which can be moved along the beam trajectory.

The polarized target will be of the frozen type, and polarization will be achieved in an adjacent supraconducting dipole located at the entrance of the beam. The target will then be translated to the experimental position along the beam axis. This target would be 20 cm long x 2 cm wide and made of propanediol. More details are given in Appendix 1.

D) Beam counters

In order to match the expected resolutions of the spectrometers (see further below), we need a beam whose momentum spread does not exceed ± 0,5 %. This is achieved with the momentum slit alone. The required ± 0,15 mr angular resolution is provided by two hodoscopes H_0 and H_1 located upstream at 17 m and 2,35 m from the hydrogen target respectively. H_0 (11 x 11 mm^2) and H_1 (40 x 40 mm^2) both have a 1 mm spacing of the cells.

IV - RESOLUTIONS AND BACKGROUND REJECTION

The measurement of angles and momenta of both scattered particles provides a 4-Constraints fit for each 2-body event. A Monte-Carlo calculation has been made by taking into account the following factors :

- the limited size of the target ;
- the matter encountered by the particles ;
- the inhomogeneity of the field ;
- the spatial resolution of the detectors (a square distribution whose width is equal to the wire spacing or to the width of a hodoscope element has been used).
- a minimum of 4 points on the backward trajectory.

The resulting momentum and angular resolutions for the forward and backward spectrometers are shown in figure 4. Tne u-momentum resolution is 0,005 $(GeV/c)^2$ and is practically constant in the entire u range. These values obtained for the πp elastic backward scattering are essentially of the same order for the Kp and pp scattering. For the backward spectrometer these values are independent of the incident particle energy, whereas for the forward spectrometer the resolutions are improved as the energy decreases, in particular for $\Delta p/p$.

A kinematical fit of simulated two-body events has been performed using the above mentioned resolutions. The fit clearly rejects events in which a particle has been misidentified by one of the Čerenkov counters.

Furthermore, a simulation of the quasi-two-body reactions

$$\pi^{\pm} p \rightarrow p \rho^{\pm}, \quad \rho^{\pm} \rightarrow \pi^{\pm} \pi^{o}$$

shows that these channels are easily separated, when nothing is known about the associated π^{o}.

By using these resolutions the 4C-fit permits us to eliminate the Fermi momentum contribution when the polarized target is used. The contamination due to the reactions induced on the bound protons does not exceed 1 % for πp scattering.

In order to study the background we have considered the three body reactions which simulate most closely the process we want to study :

$$\pi^{\pm} p \rightarrow N^{*} \pi^{\pm}$$
$$\hookrightarrow p\pi^{\circ}$$

In the Monte-Carlo program the proton and the π^{-} have been given the estimated resolutions and the reaction has been fitted as an elastic event. The contamination brought about by this reaction is 3 % at 75 GeV/c. The calculations also show that the γ rays from π° decay are emitted in a 16 mr cone (at 75 GeV/c).

Inelastic reactions giving heavier mesons or baryons do not contribute significantly to the background.

V - TRIGGER AND DATA HANDLING

The trigger requires at least one charged particle in each spectrometer and none outside the solid angle covered by the wire chambers. This condition is fulfilled when :

- the beam (H_0 H_1) is in coincidence with a forward scattered particle (H_2 H_3 C_4) and a backward scattered particle (fast OR pulse of the proportional chamber closest to the target) ;

- no veto comes from the anticoincidence counters AC 1, AC 2, AC 3 ;

- no fast particle is detected by the two forward Čerenkov counters TC 1 and TC 2 .

In the special case of the $\bar{p}p$ reactions where no fast baryons are emitted in the forward direction, a simultaneous trigger logic would not include the veto of the Čerenkov counters.

The counter C4 has a hole in order to let the beam through. In the case of negatively charged incident particles this hole lies outside the trajectory of the scattered protons ; when a "positive beam" is used some of the protons scattered at small u escape through the hole. Nevertheless we detect events in the whole u range, but the total efficiency drops to 0,30 (Figure 5).

The chamber PC 2 has a dead zone in front of the hole. PC 1 also has a dead zone in the path of the beam.

For the previously quoted reactions on deuterium a), the counters AC 1 and AC 2 are located near the target bag and allow us, in the covered solid angle, to veto the events for which the momentum of the proton spectator is > 250 MeV/c. For the reactions producing a π^0 or an η^0, five lead plates (0,4 radiation length each) are inserted between the wire planes of the backward spectrometer. The total detection efficiency drops by a factor of three with respect to the charged channels.

The reactions b) give a forward proton, and an additional π^0 which is fairly well collimated. Therefore the π^0 can be detected in counters of reasonable size (~ 1m2) and allow for a more stringent trigger.

To give us an idea of the amount of data which must be handled in this experiment, we use the following figures :

- number of wires : 22900 ;
- number of hodoscope elements : 414 ;
- number of wire pulses/event : 50 ;
- maximum number of events per spill : 450 .

The information in the chambers is transfered in sequence onto a bus line by means of 8-bit words at each pulse of a ten megacycle clock. The total transfer time is ten microseconds. These data will be encoded into 50 16-bit words. An additional 16 words are used for the information pertaining to the hodoscopes. The total acquisition time will be 120 µs per event in our PDP 11-45 equiped with a MOS memory.

We give in appendix II a short description of the low price logic we intend to use on the proportional wires.

Special fast electronics connected to the two wire planes closest to the target as well as a simple treatment by the computer will allow rough checks for good spatial and kinematical correlations. This will permit us to filter the events before storage on magnetic tape for later off-line analysis.

VI - CROSS SECTIONS AND DATA RATES

We have computed the number of events per nanobarn with the following assumptions :

- beam repetition rate : 1 pulse / 4,0 sec ;
- hydrogen target length : 75 cm ;
- $\pi/K/p$ intensities determined from ref. [1] for the M6 and M5 beams;
- total beam intensity $2,10^7$ particles/second for $\Delta p/p = \pm 0,5\%$;
- pulse length : I,0 sec ;
- running time : 10 days ;
- security factor : 0,5 ;
- detection efficiency $\approx 0,4$ (see Fig 5)

By using the figures above we can calculate the sensitivity in nb/(Gev/c)^2 which is reached for a given statistical accuracy as well as the trigger rates, provided that the $d\sigma/du$ values are known. For these values we use phenomenological predictions. [2]

These predictions are deduced from fits on existing data in the 5-20 Gev range, extrapolated through a Regge model to higher energies; they are a first approximation becausethey depend on the model and on the accuracy of the measurements at low energy.The sensitivities for several different reactions are given in figures 6 and 7 .For each reaction, the curves show the variation of p_{beam} as a function of u for fixed $\frac{d\sigma}{du}$ values. The limit of sensitivity in nb/(GeV/c)^2 is calculated for every bin of 0,1 (Gev/c)^2 with a statistical accuracy of IO % in the determination of $d\sigma/du$, (100 events per bin).

In figures 6 and 7 the hatched zones correspond to this limit, for the M5 and M6 fluxes, respectively.

The measurable regions for each reaction demonstrate the ability of the apparatus to perform baryon exchange measurements between 20 and IOO Gev.

For the polarization measurements, the reaction rate is five times lower than for the liquid hydrogen target. This is due to the proportion of free protons and to the effective length of the target (see Appendix I).

In the sensitivity plot (Figures 6 and 7) the hatched zone is translated by an order of magnitude towards the higher cross

sections. If we perform our measurements in this shrunken domain for the same running time as for the unpolarized experiment, we get an indetermination on P lower than 0,05 in bins of 0,2 $(Gev/c)^2$ ($\Delta P = 0,05$ is a maximum indetermination which is obtained at the limit of sensitivity).

Data rates.

Integrating the phenomenological cross section extrapolations between u_{min} and $u = -1,3$ $(GeV/c)^2$ and summing all channels which contribute simultaneously to the trigger we obtain the trigger rates. We can have an idea of the background contribution to the trigger by looking at the fast forward particles produced in a bubble chamber (11 GeV/c, π^- exposure of the Genova - Hamburg-Milano - Saclay collaboration) and by extrapolating in a somewhat hazardous way. It appears that the total rate is no more than four times the two-body rate. The following trigger rates are obtained :

beam composition	20 Gev/c	75 Gev/c
$\pi^+ + K^+$	600	100
$\pi^- + K^- + \bar{p}$	350	100

Machine time.

If we want to reach for the backward cross sections the wide domain in p_{beam} and u shown in figures 6 and 7 we need 10 days per energy and per beam polarity. As said in the beginning we measure simultaneously :

$$\pi^+ p \longrightarrow p\ \pi^+$$
$$\pi^- p \longrightarrow p\ \pi^-$$
$$K^+ p \longrightarrow p\ K^+$$
$$\bar{p}\ p \longrightarrow p\ \bar{p}$$
$$\bar{p}\ p \longrightarrow \pi^-\ \pi^+$$
$$\bar{p}\ p \longrightarrow K^-\ K^+$$

In a second stage, when the polarized target is in place, we require the same time at each energy to measure the polarization

parameter of the same reactions. We would like to take data at three energies in the 20 - 100 GeV range.

If, as we hope, our apparatus can handle a flux twice as high as the planned one and if the machine runs at 400 GeV, the required time would be reduced by a factor of two.

VII - L O G I S T I C S

We would like N A L to provide :

- two steering magnets at the end of the beam ;
- two Čerenkov counters for the beam particle identification ;
- the power supply for the Goliath and Mimosa magnets (see characteristics thereafter) ;
- the refrigerator and controls for liquid hydrogen target.

The Goliath magnet floor surface is 4.8 x 4.8 m^2 ; the gap center is 154 cm above the ground ; this takes into account the tripod which is 23 cm high and can be removed if necessary. At full power the running voltage is 600 V and the water cooling system requires 80 m^3/h at 22 kg/cm^2. The total weight is 250 metric tons.

The Mimosa magnet which could be loaned from the Saturne Department has the overall dimensions of 303 cm x 155 cm x 245 cm. For a field of 1.4 T, the voltage is 290 V with a power of 150 KW. The water pressure is 15 kg/cm^2 at 3.5 m^3/h delivery.

We will provide :

- all the phototubes and scintillators ;
- the proportionnal chambers ;
- the downstream Čerenkov counters;
- the associated electronics and cables ;
- the targets ;
- the computer (PDP 11-45) ,

All the electronic equipment including the PDP 11-45 computer, the tape units, the teletype and the other displays could be installed in a trailer. The total floor area required is approximately 9 x 25 m^2.

Construction schedule.

The construction of the different parts of the apparatus would take a year and could be achieved by mid-1974. We intend to do a complete test of the apparatus at the Saturne accelerator by measuring $\pi^+ p \longrightarrow p\pi^+$ at 2 GeV/c 3 months later. Then we could move to N A L at the end of 1974.

COMMENTS CONCERNING THE RUNNING TIME

We realize that the amount of time we have asked for at the accelerator is considerable (10 days per energy).

- Should these conditions be granted we would be able to obtain a result of extremely high accuracy :

a precision of 10 % (100 events) in the bin $\Delta u = 0.1 (GeV/c)^2$ at the limit of sensitivity where $\frac{d\sigma}{du}$ is at a minimum (see figs. 6 and 7).

- If our running time was limited (to $\frac{1}{3}$ the period for instance) and if we require the same precision as above, the results $\left[\frac{d\sigma}{du} = f(u)\right]$ would still be excellent for the π^+ and π^- incident particles.

However for the K^+ and $\bar{p}$ beam the measurable u-domain shrinks. But up to 40 GeV/c we can still measure the variation of $\frac{d\sigma}{du}$ versus u.

- APPENDIX I -

We plan to use a frozen spin target such as the one now being tested at CERN.

With this propanediol target ($C_3H_8O_2$) the interaction rate is five times less than for the H_2 target because the free and bound protons are in the ratio of 1 to 4 and because its length is limited to 20 cm.

To perform our measurements we require solid angles at least as large as for the H_2 target. Thus large supplementary pole pieces cannot be placed in GOLIATH to reach the 2.5 T field which is necessary for conventional target polarization.

In the frozen spin technique the protons are polarized in an auxiliary dipole which has the required field strength and which is located near the beam axis at the entrance of the GOLIATH magnet. The polarized target is then transferred into the GOLIATH magnet for the scattering experiment.

The polarization then decreases as :

$$P(t) = P_o \, e^{-t/T_o}$$

P_o is the initial polarization, averaging 80 %.

T_o is the relaxation time which is dependent on GOLIATH's holding field and on the target temperature.

For a field of 1.7 T, T_o varies with the temperature :

$$T_o = 10 \text{ hours for } 0.3^\circ \text{ K},$$

$$T_o = 300 \text{ hours for } 0.1^\circ \text{ K}.$$

A convenient relaxation time of 24 h lies between those two temperatures which have been readily reached with a He_3 - He_4 dilution cryostat developped by the Helsinki Technical University Group.

- APPENDIX II -

The electronics associated with the multiwire proportional chambers:

We have not yet made our choice between a circuit built in our laboratory and a MOS integrated circuit. The characteristics and price of both are equivalent. The overall price is low : $6 per wire. Each unit handles eight wires.

The Laboratory Circuit works very well but has to be hybridized because of the little space available. In September, 1973 the MOS integrated device will be produced in large quantities by the LETI[3].

We have already tested some of these samples which were connected to a proportional chamber. The diagrams of both circuits are shown in the figure.

The Laboratory Logic; The first stage is a 74820 Texas Instrument comparator used as an amplifier and a monostable multivibrator. The threshold is adjustable down to 2 mV and the output pulse length will be fixed according to the experiment trigger delay.

The write-read system is a 1/4 (74173) which has a four-bit latch memory with a built-in writing strobe and a tri-state output gated by a read -out pulse.

The LETI Logic; This circuit has the advantages of an integrated device : compactness, high reliability, low power consumption (∿ 1/5 of the laboratory-made circuit), but on the other hand it is slightly slower. The minimum threshold is relatively high : 6 mV and this has to be compensated for by using on the chambers a voltage 100 V higher to reach the same efficiency as for the laboratory circuit.

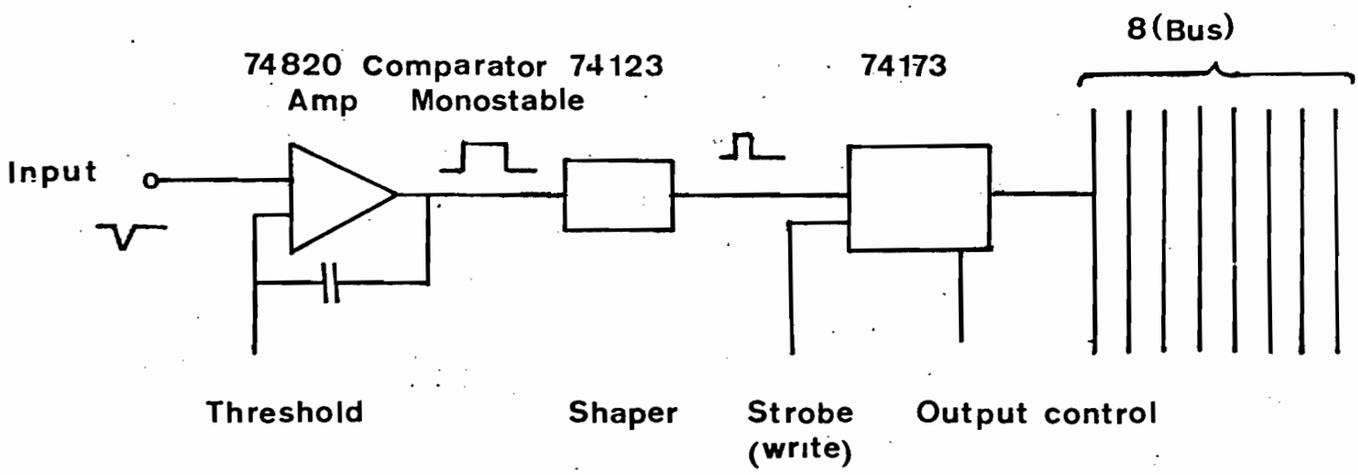

"LABORATORY" CIRCUIT

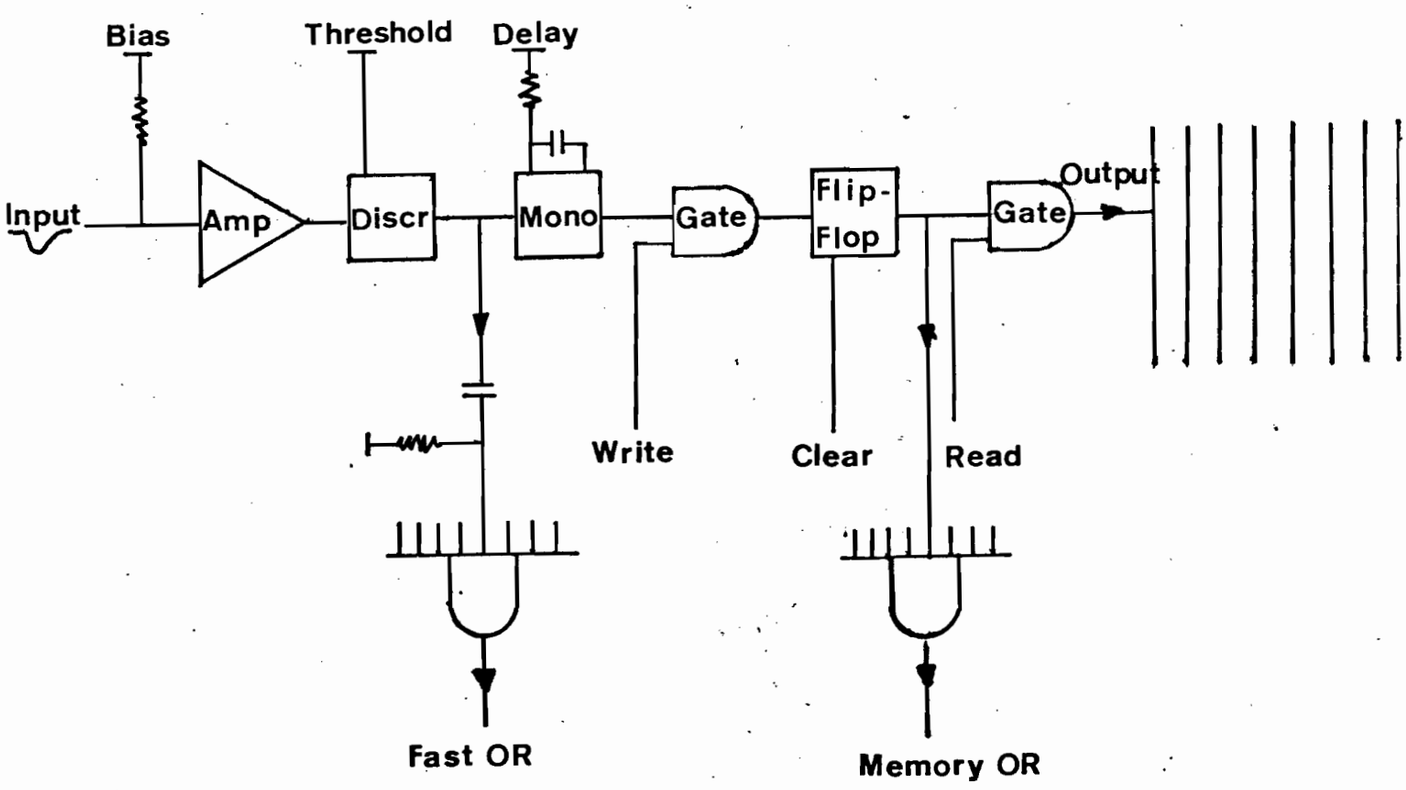

"LETI" CIRCUIT

REFERENCES

1. Meson Laboratory Preliminary Design report (March 1971). NAL.

2. Differential cross sections for some two-body and quasi two-body reactions extrapolated to high energy. Saclay working group, ECFA/WG/72.83.

3. Essais pratiques du circuit intégré M.O.S "FILAS" LETI CENG, Grenoble FRANCE (Preprint 1973).

FIGURE CAPTIONS

FIGURE 1. Side and top views of the apparatus

- H_0, H_1, H_2, H_3 : scintillator counter hodoscopes
- PC 1, PC 2 : proportional wire chambers
- TC 1, TC 2 : atmospheric pressure gas Cerenkov counters
- AC 1, AC 2, AC 3 : anticoincidence counters
- C4 : forward scattered proton coincidence counter.

The beam dispersion corresponds to the gray zone. The forward scattered proton for p = 75 Gev/c and for $0 \geqslant u \geqslant -1.2 (\mathrm{Gev/c})^2$ covers the hatched zone.

FIGURE 2. Graphic design of the Goliath magnet.

FIGURE 3. Magnetization curve of the Goliath magnet.

FIGURE 4. Monte-Carlo computed resolutions $\frac{\Delta p}{p}$, $\Delta\lambda$, $\Delta\phi$ for the backward and forward spectrometer.

FIGURE 5. Total detection efficiency as a function of momentum transfer $-u$.

FIGURES 6 and 7. Variation of p_{lab} (GeV/c) as a function of $-u$ $(\mathrm{GeV/c})^2$ for fixed differential cross sections $d\sigma/d\,u$ $(\mathrm{nb}/(\mathrm{GeV/c})^2)$. The lowest $d\sigma/d\,u$ values obtainable in this experiment are indicated by the dashed and dotted lines for the M5 and M6 beams respectively.

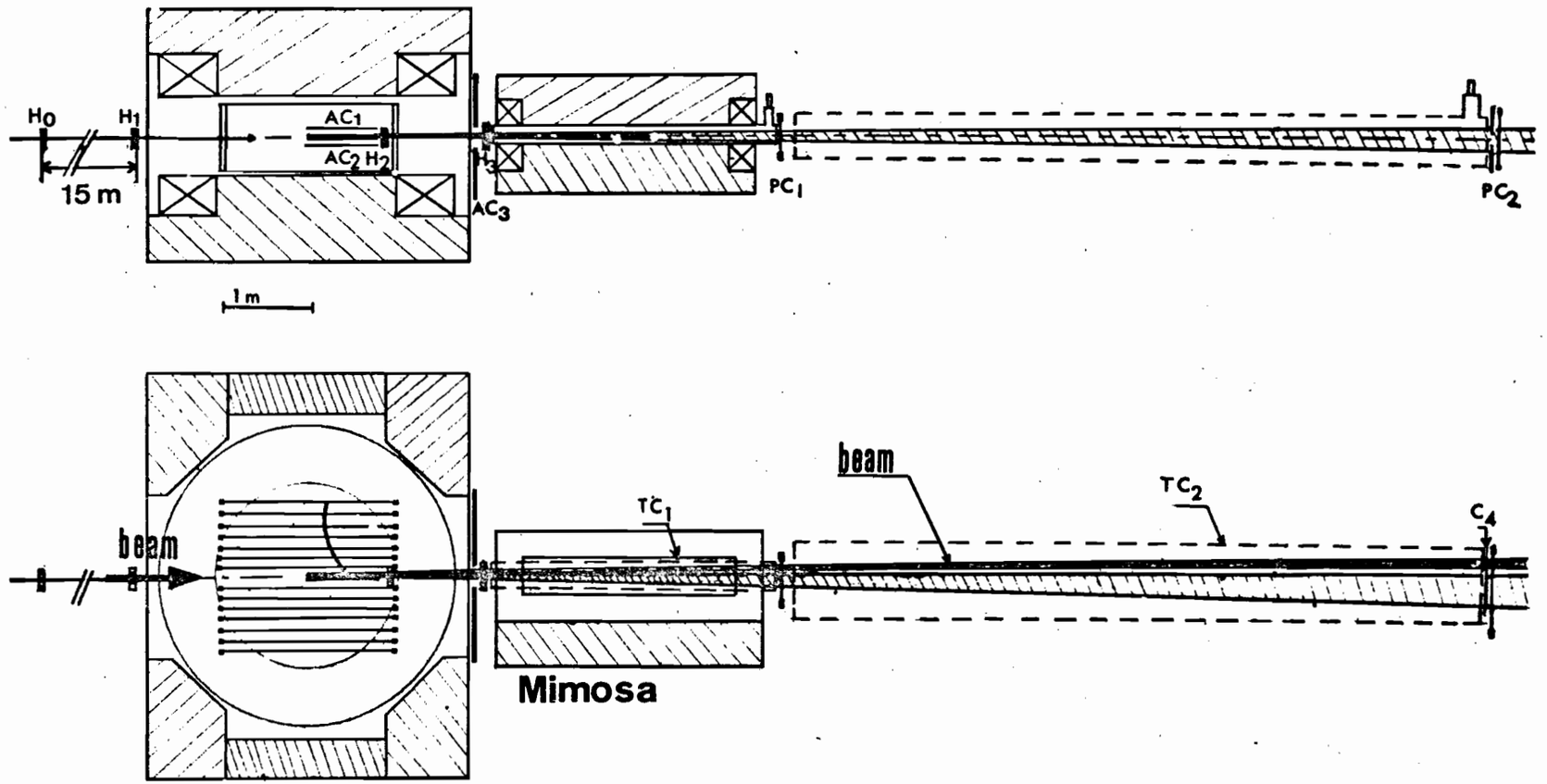
H0
H1
15 m
AC1
AC2 H2
H3
AC3
PC1
PC2
1 m
beam
TC1
beam
TC2
C4
Mimosa
Goliath

fig.1

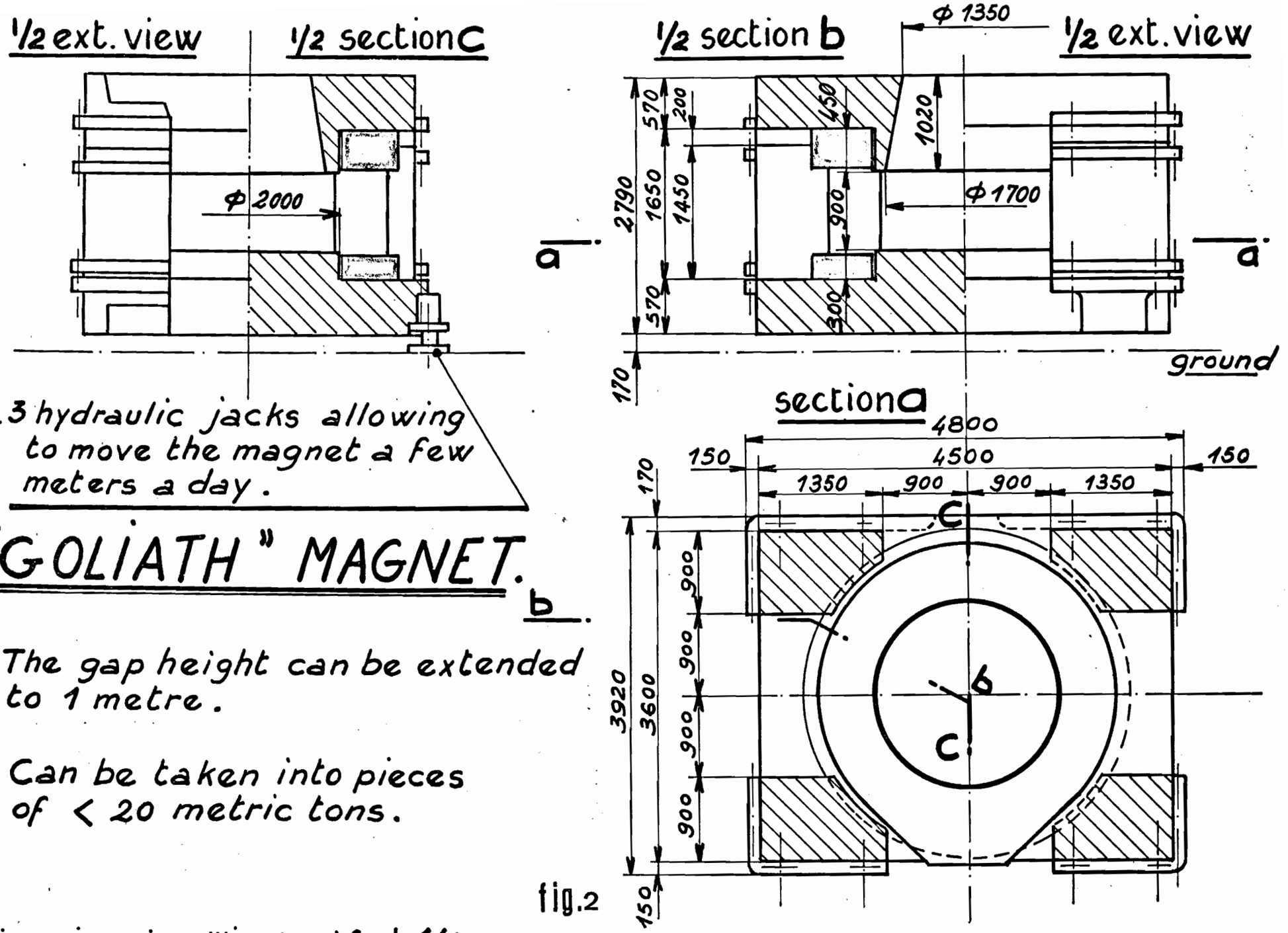

- 3 hydraulic jacks allowing to move the magnet a few meters a day.

"GOLIATH" MAGNET.

b

- The gap height can be extended to 1 metre.
- Can be taken into pieces of < 20 metric tons.

fig.2

dimensions in millimeters) Scale: 1/50

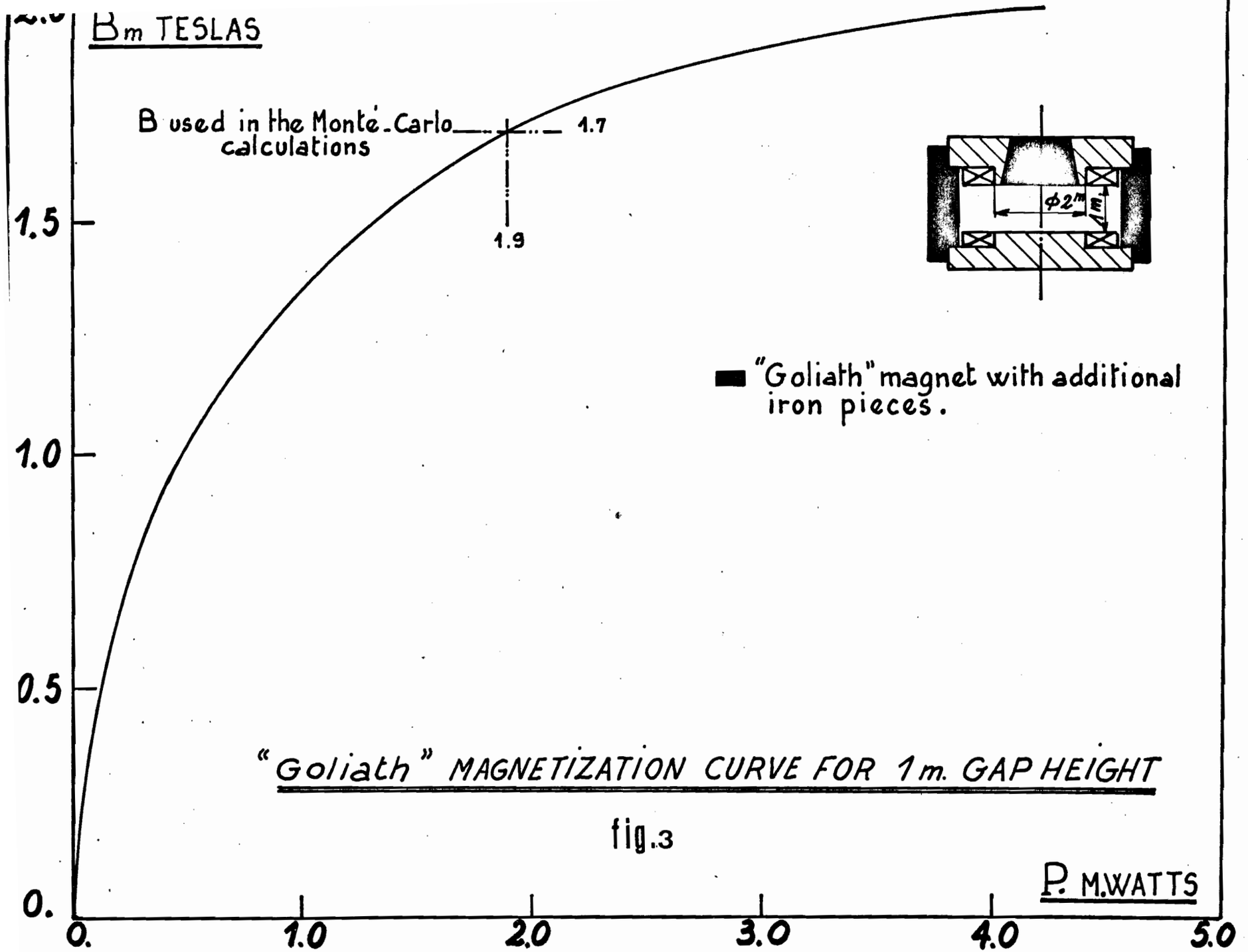

"Goliath" MAGNETIZATION CURVE FOR 1 m. GAP HEIGHT

fig.3

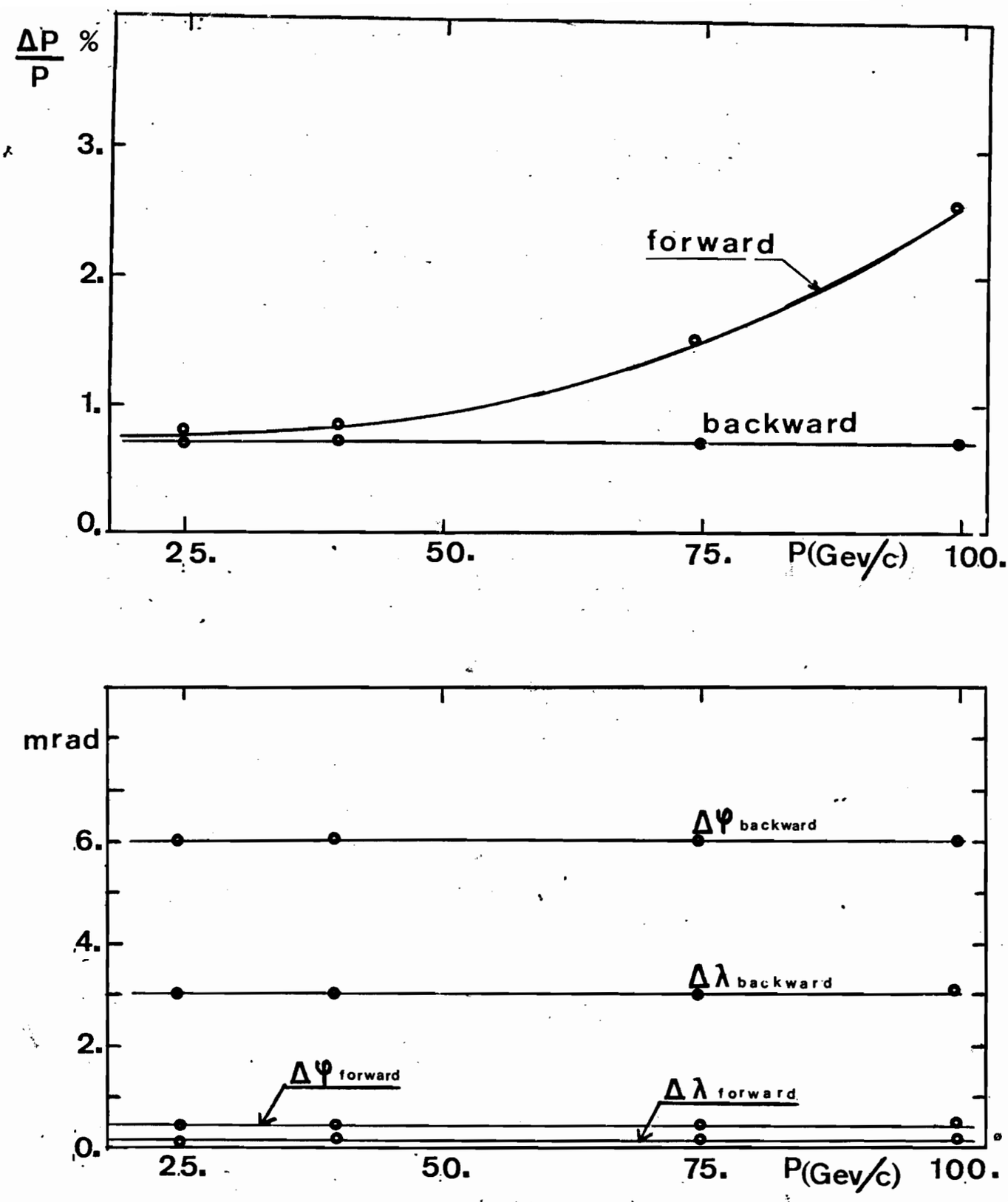
ΔP/P %
3.
2.
1.
0.
forward
backward
25.
50.
75.
P(Gev/c)
100.
mrad
6.
4.
2.
0.
Δφ backward
Δλ backward
Δφ forward
Δλ forward
25.
50.
75.
P(Gev/c)
100.

fig. 4

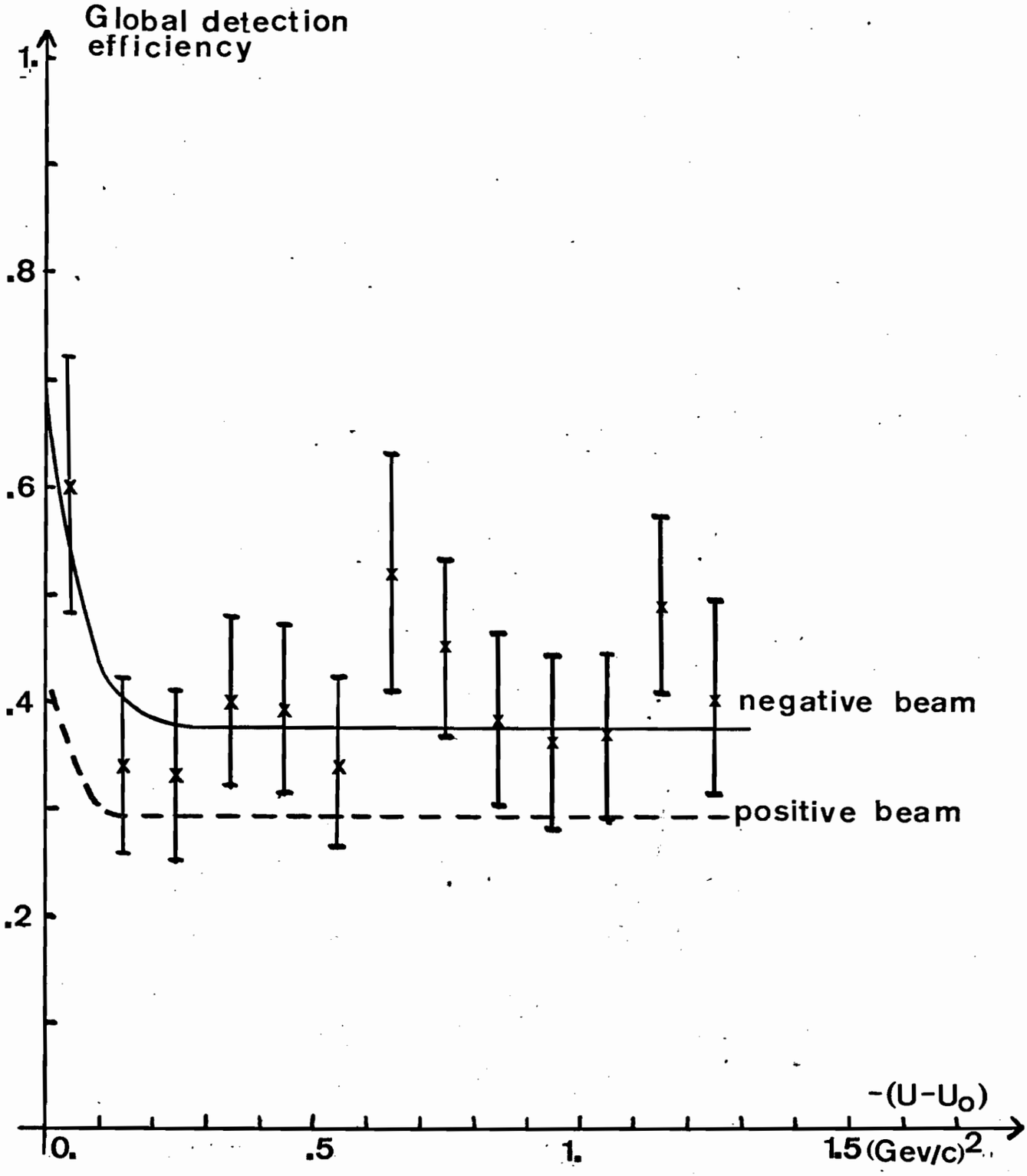
Global detection efficiency
1.
.8
.6
.4
.2
negative beam
positive beam
-(U-U$_o$)
0.
.5
1.
1.5 (Gev/c)^2

fig.5

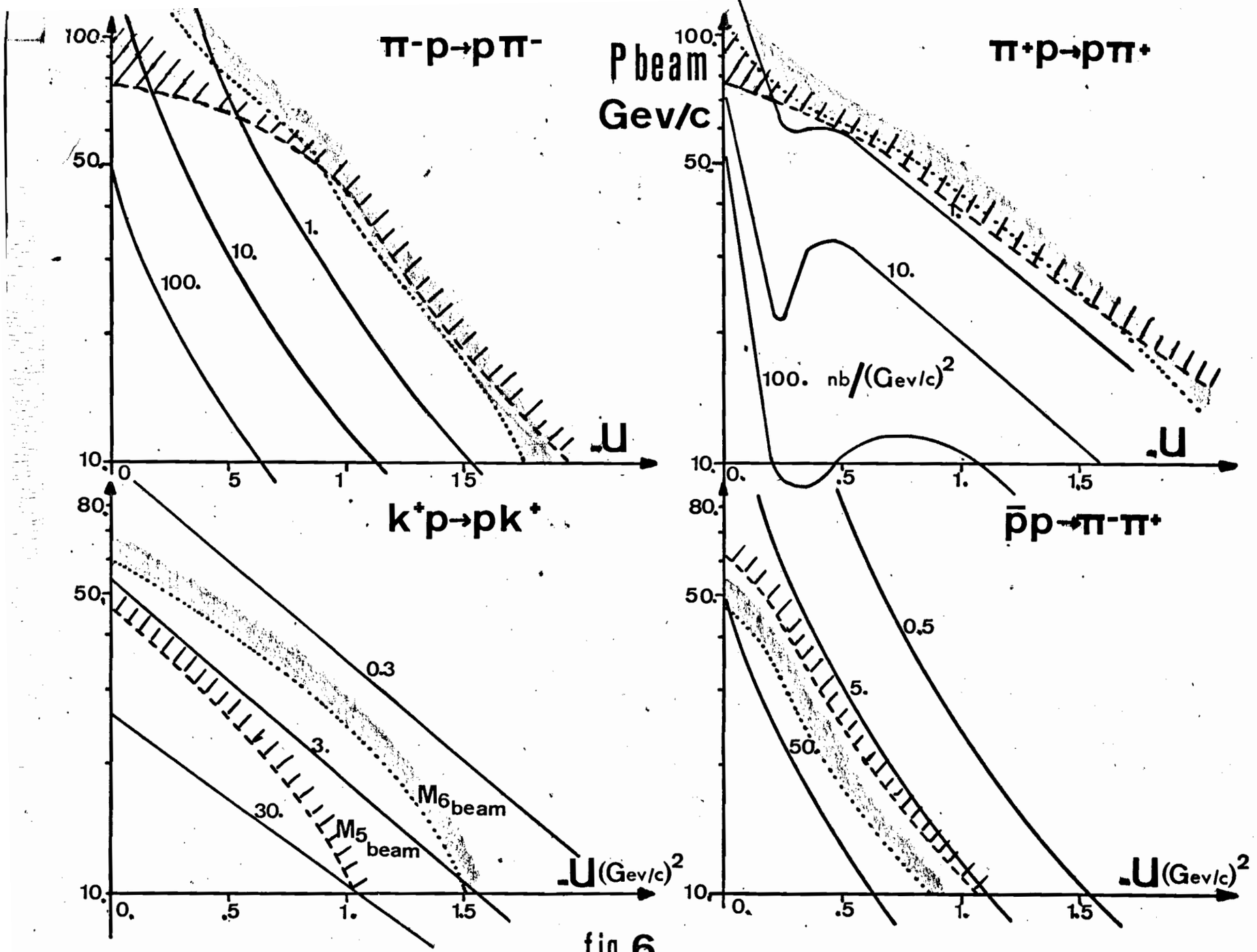
π⁻p→pπ⁻
P beam
Gev/c
π⁺p→pπ⁺
100.
10.
1.
100. nb/(Gev/c)²
-U
k⁺p→pk⁺
p̄p→π⁻π⁺
0.3
3.
30.
M6beam
M5beam
0.5
5.
50.
-U(Gev/c)²

fig.6

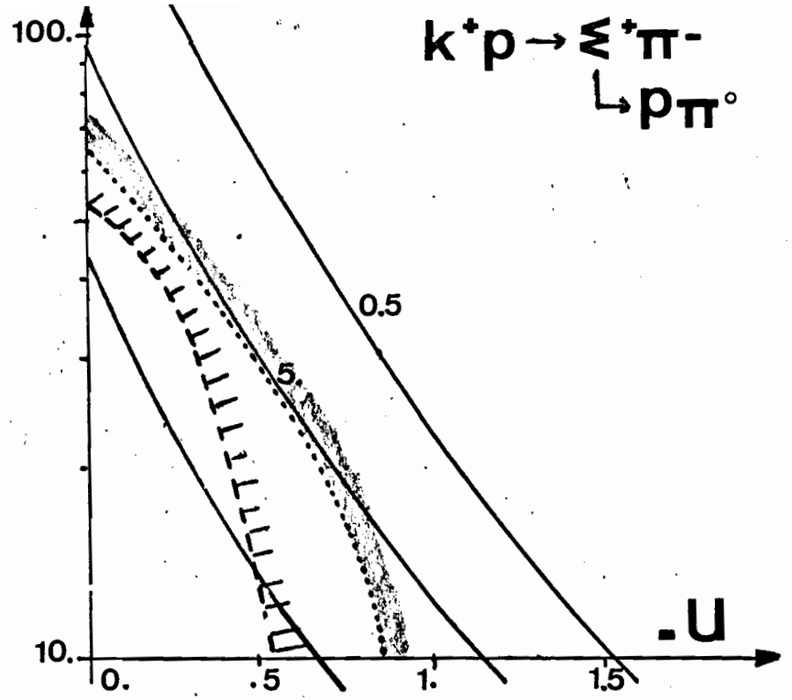
$K^+p \to \Sigma^+\pi^-$
$\hookrightarrow p\pi^0$
100.
10.
0.
.5
1.
1.5
0.5
5
-U

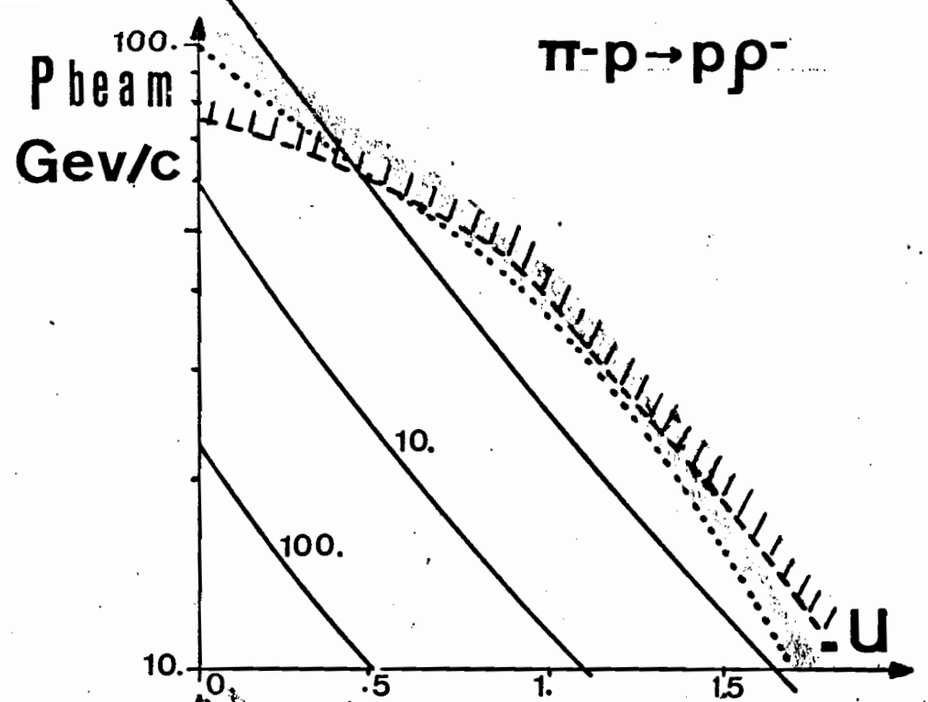
$\pi^-p \to p\rho^-$
P beam
Gev/c
100.
10.
0
.5
1.
1.5
10.
100.
-U

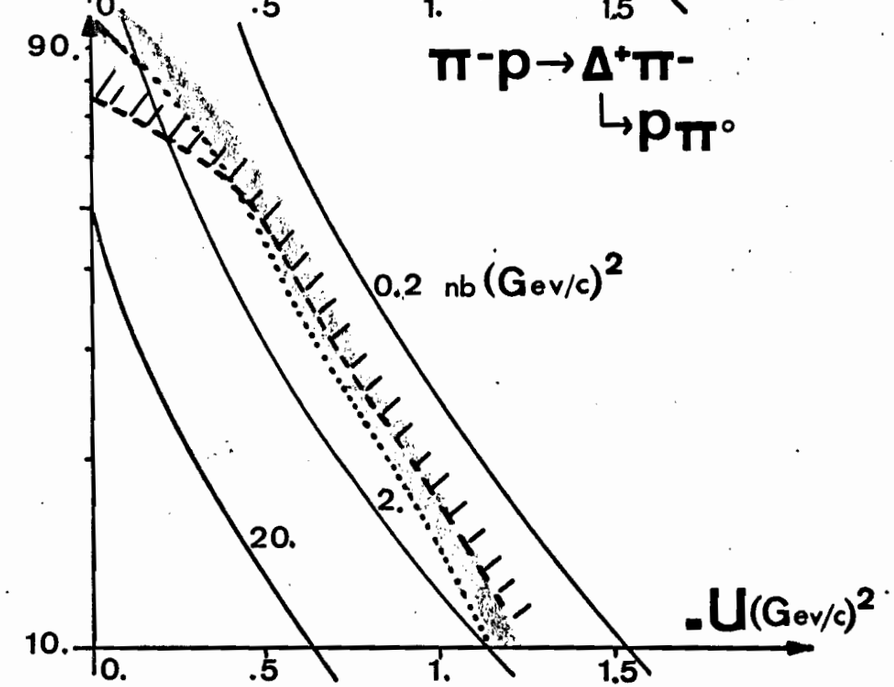
$\pi^-p \to \Delta^+\pi^-$
$\hookrightarrow p\pi^0$
90.
10.
0.
.5
1.
1.5
0.2 nb (Gev/c)^2
2.
20.
-U(Gev/c)^2

fig.7

RECEIVED
NAL DIRECTOR'S OFFICE

SEP 27 1973

ADDENDUM TO NAL PROPOSAL # 212

(Measurement of backward 2-body and quasi-2-body reactions induced on unpolarized and polarized protons by $\pi^{\pm}$, $K^{\pm}$, $\bar{p}$ ranging from 20 to 100 GeV/c)

The main purpose of the present addendum to our proposal # 212 is to compare the capabilities of our apparatus with the ones of other proposals (# 165, α, β) aiming at the same physics. This is done in connection with Prof. Wilson's advices following the Advisory Committee of late July.

I - Two-body backward scattering below 100 GeV/c on unpolarized targets

The proposal # 165 intends to measure backward elastic $\pi^{\pm}$ scattering in the $0 \lesssim -u \lesssim 1$ $(GeV/c)^2$ range at 40 and 75 GeV/c incident momenta. The focusing spectrometer facility is used to analyse the forward scattered proton. Due to the small aperture of this spectrometer (20 to 40 μster) the u range is successively covered by changing the input angle of the primary beam on the target.

Secondly, a new proposal from Indiana University and NAL [α] looks for the measurement of the π^--p backward elastic scattering near $u = 0$ from 15 to 100 GeV/c. They use the same forward spectrometer as proposal # 165 and additional proportional wire chambers and scintillators to measure the pion direction in a ±15° backward cone around the beam axis.

Finally, a recent letter of intent from Prof. Hofstadter [β] proposes to measure the backward pion, using a high momentum resolution spectrometer of small aperture.

Table I summarizes the different properties of these various spectrometers and Fig. 1 gives the expected rates per nanobarn for π-p backward elastic scattering at 60 GeV/c. Those numbers are given for a 10 days running time with a security factor of 0.5.

Proposal File No. 212
Master
DO
JRS

Further remarks on Fig. 1

a) As the K^+ and $\bar{p}$ intensities are an order of magnitude lower than pion fluxes, our apparatus is the only one allowing a significant storage of events during the 10 days run.

b) The dependence of $d\sigma/du$ can be measured only in experiments # 165 and # 212. In proposal # 165 the u range is covered point to point. This implies a careful determination of the normalization.

c) The apparatus of proposal # 212 is the only one which is able to measure quasi two-body channels giving a forward baryon decaying into a proton plus a pion. This is due to its large momentum acceptance and its wide forward solid angle.

II - Two-body and quasi two-body backward scattering below 100 GeV/c on polarized target

A more careful examination of possibility of using a polarized target in our magnet has shown that the cheapest way was to use a conventional butanol polarized target. This implies the use of shims of limited size in order to have a $dB/B = 4 \cdot 10^{-4}$. The homogeneity of the field in the momentum measurement region is not drastically altered. With the 18 kG field the butanol target will reach a 70 % polarization. The shimed magnet and the polarized target are sketched on Fig. 2. Figure 3 gives a first design of the cryostat.

With this target the interaction rate is 3.53 times less than with our hydrogen target.

Background rejection

If the kinematical constraints given by the apparatus do not allow a clean rejection of events produced on bound protons from those produced on free polarized protons, the polarization measurement is still possible by the substraction method. In that case the accuracy on P is given roughly by

$$\Delta P \simeq \frac{1}{P_t} \sqrt{\frac{2}{\rho \cdot N_H}}$$

where ρ is the ratio of events on free protons to events on free + bound nucleons fitting elastic scattering.

P_t is the target polarization and N_H the number of events on free protons. Monte Carlo calculations show that, for proposal # 165 one has $\rho = 0.25$; with the additional measurement of the backward pion direction (as in α) ρ increases to 0.51. For our proposal is $\rho \simeq 0.6$

If one wants to compare proposals # 165 and # 212 for polarization measurements giving the same uncertainty P, the efficiency curves of Fig. 1 have to be lowered by a factor R/ρ . R is the ratio of protons in the hydrogen target of each proposal to the free protons of a 20 cm long butanol target. R is 3.53 and 2.93 for proposals # 212 and # 165 respectively.

Remark 1

Measurements of quasi two-body reactions on polarized target are feasible with the spectrometer of proposal # 212, nevertheless the forward solid angle is a little bit small for some reactions (2 or more forward charged decay products). The backward spectrometer of proposal # 212 matched with the forward spectrometer of proposal # 110 would give a more powerfull apparatus for these reactions.

Remark 2

As the geometrical efficiency of the forward focussing spectrometer increases with the beam momentum it could be very useful to match it with a wide solid angle vertex detector (as proposal # 212) to perform two-body physics in the 200 GeV/c range.

III - Further details on the apparatus

Careful studies of the different parts of the apparatus have been performed.

- For the large MWPC (1.8 × 0.9 m) of the backward spectrometer a first module is being built. A mechanical solution has been found to insure a high rigidity to the frames with a minimal lost of useful magnetic volume. Tests in this chamber will start at the end of november.

- In connexion with Prof. Charpak we shall start tests on a small MWPC (15 × 15 cm) with a spacing of 0.5 mm between the read-out wires ($\emptyset$ = 10 μ). If it is verified that these chambers can tolerate the fluxes

required in proposal # 212 we shall use this cheapest solution to build the $H_{0,1,2,3}$ hodoscopes.

- Monte-Carlo studies have shown that the high efficiency threshold Cerenkov counters may be used with only one small diameter (Ø = 5 cm) phototube : this allows to use the small and fast phototube XP 2020. Straightforward mechanical construction is allowed because one can use for the whole p_{LAB} range gases at atmospheric pressure.

(On all these topics notes giving further details may be asked on request).

PROPOSAL	SPECTROMETER LAYOUT	$\Delta\Omega$ (mstrd) for.	back.	$\Delta p/p$ (%) for.	back.	$\Delta\theta$ (mrd) for.	back	Efficiency
165	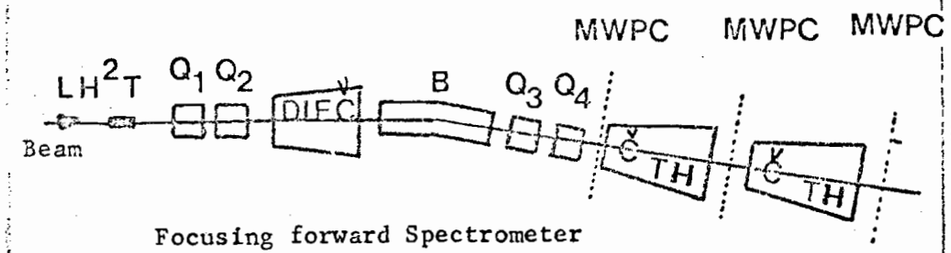 Focusing forward Spectrometer	0.020	/	.032	∞	0.1	± 5.	$\simeq$ 0.1 increases with s. momentum transfer u range covered point to point
212	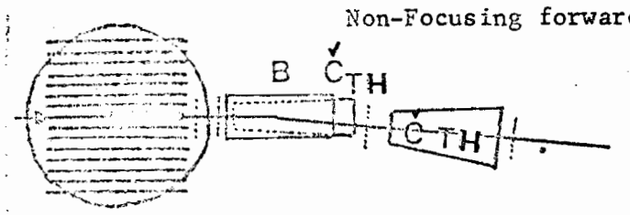 Non-Focusing forward Spectrometer Large Solid Angle Spectrometer	2.540	3.10^3	0.8-3.	0.7	0.1	± 6.	$\simeq$ 0.4 cst. as a function of u and s.
α	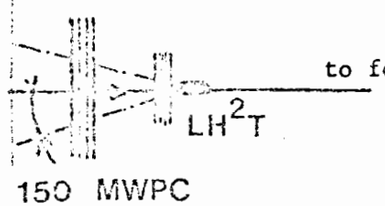 to focusing spectrometer same as ≠ 165	0.04	214.	0.05	∞	±0.1	±6.	$\simeq$ 0.15 only near u = 0.
β	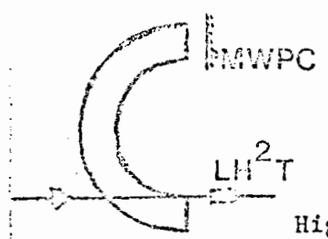 High resolution backward spectrometer	/	12.	∞	0.01			$\simeq$ 0.007 only near u = 0.

TABLE 1

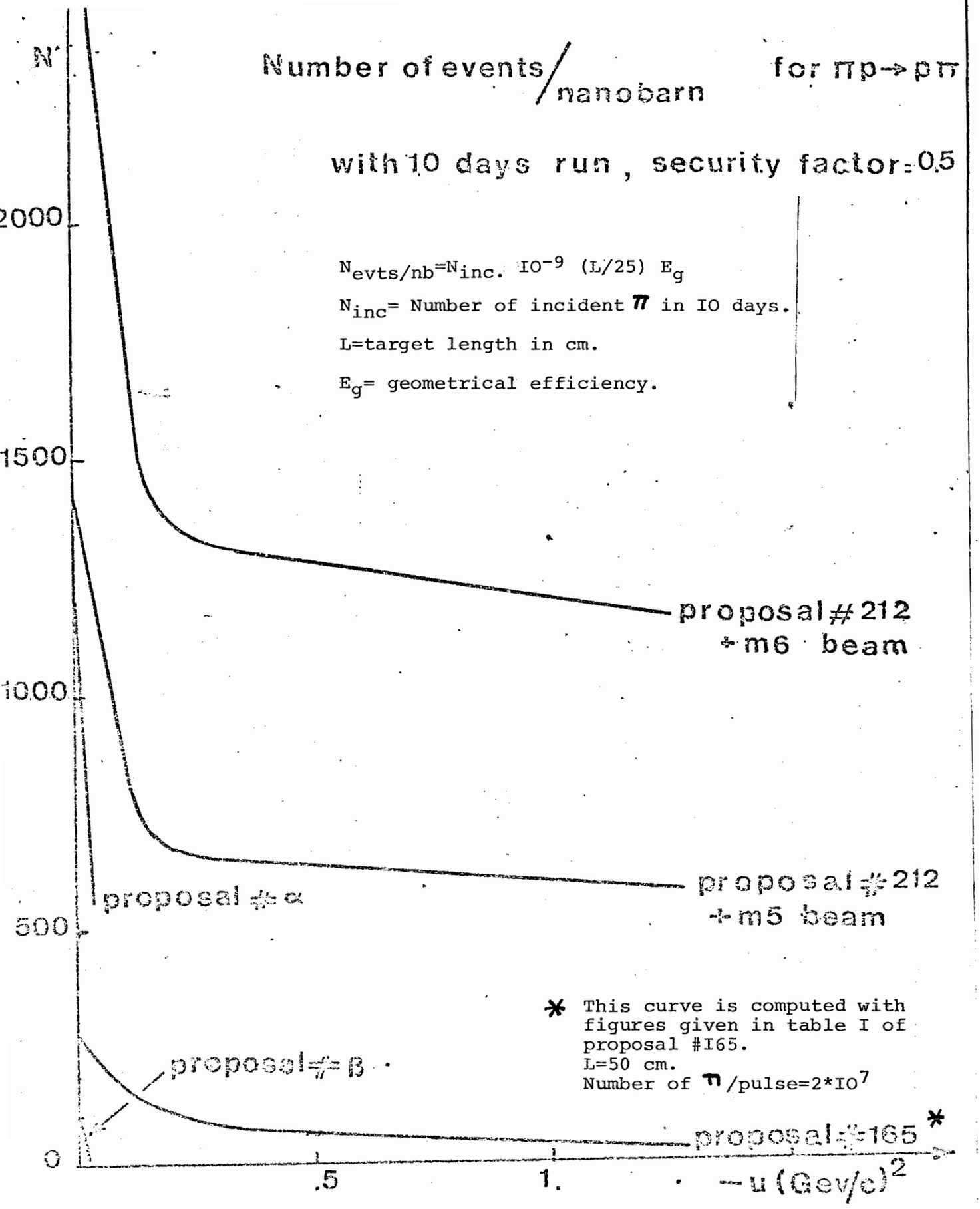
N
Number of events/nanobarn for πp→pπ
with 10 days run, security factor=0.5
2000
1500
1000
500
0
$N_{evts/nb}=N_{inc}.\ 10^{-9}\ (L/25)\ E_g$
N_{inc}= Number of incident π in 10 days.
L=target length in cm.
E_g= geometrical efficiency.
proposal #212 + m6 beam
proposal #212 + m5 beam
proposal # α
proposal # β
proposal #165 *
* This curve is computed with figures given in table I of proposal #165.
L=50 cm.
Number of π/pulse=2*10^7
.5
1.
−u (Gev/c)^2

Fig 1

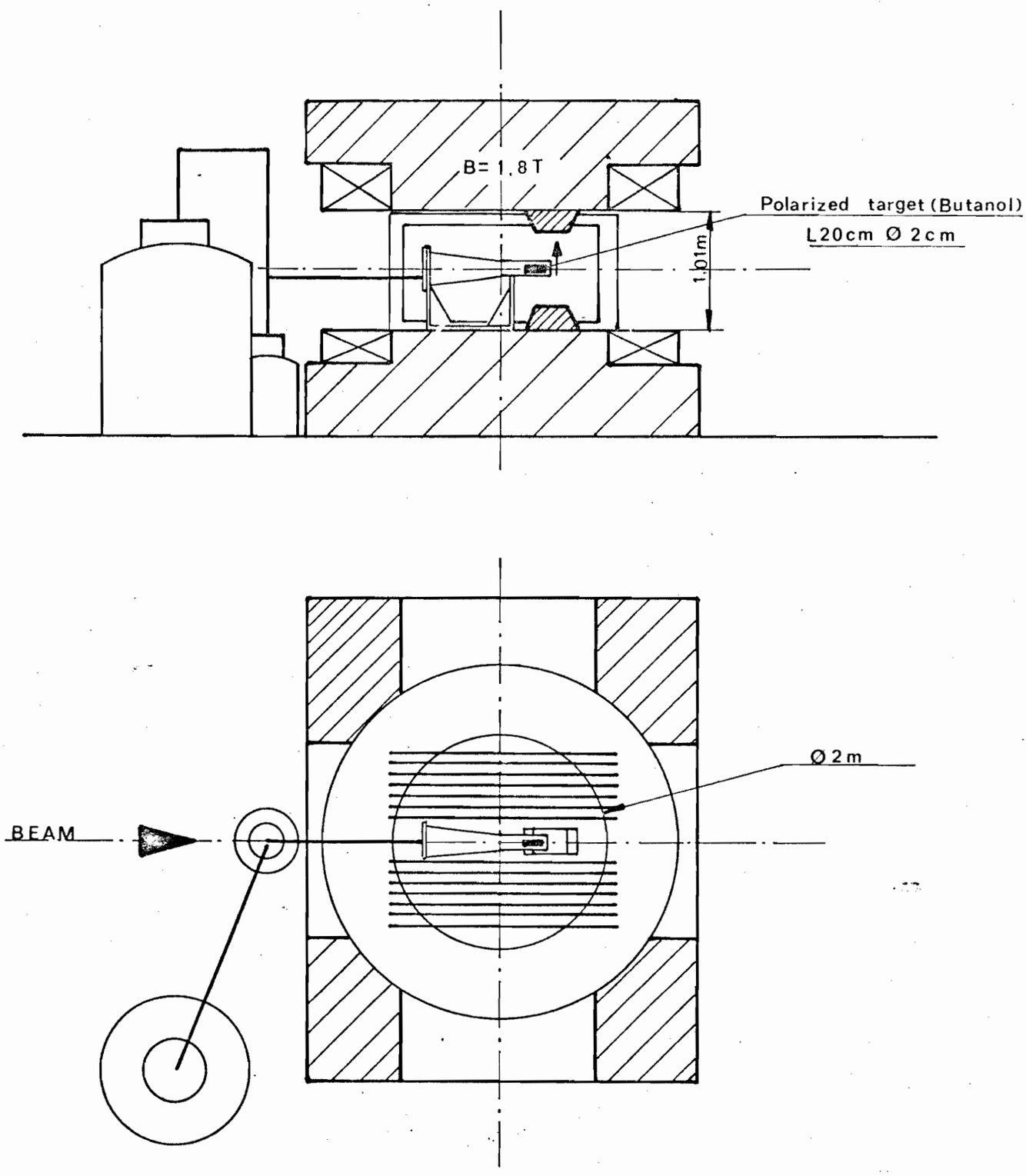

Fig 2

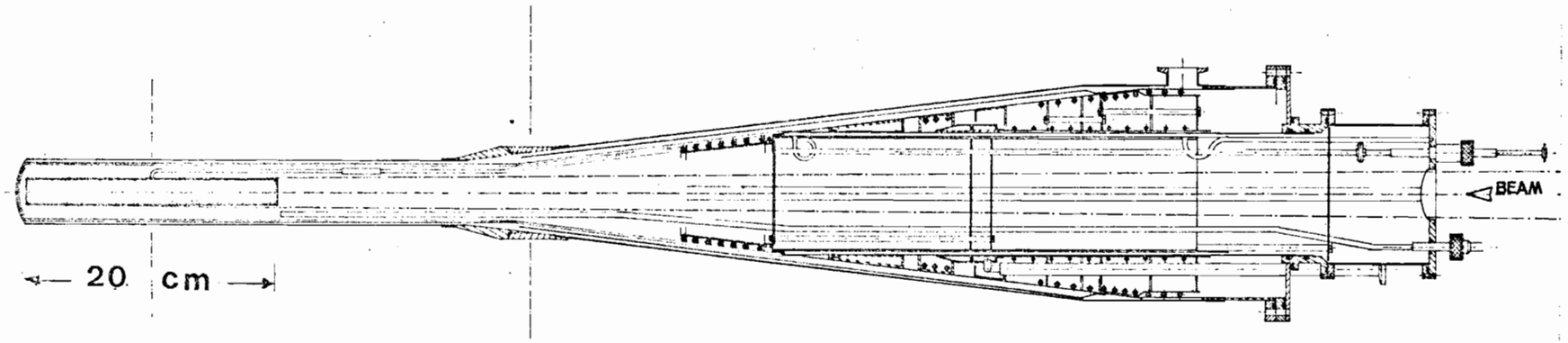

Fig. 3