NAL PROPOSAL NO. 167

Scientific Spokesman:
D. F. Bartlett
Department of Physics
University of Colorado
Boulder, Colorado 80302

FTS/Off-Net: 303-447-1000
443-2211

"STATIC" ELECTRIC AND MAGNETIC FIELDS NEAR THE INTERNAL PROTON BEAM AT NAL

D. F. Bartlett, P. G. Brabeck
University of Colorado

E. Bleser
National Accelerator Laboratory

February 14, 1972

"STATIC" ELECTRIC AND MAGNETIC FIELDS NEAR THE INTERNAL PROTON BEAM AT NAL

Are the static electric and magnetic fields near a beam of relativistic protons simply those expected for a charge density λ and a current $I = c\beta\lambda$? We propose to investigate the following aspects of this question:

a) Is the proton's charge invariant as it is accelerated from 10 GeV to 200 GeV?

b) Does curl $E = 0$ near a static beam?

c) Does div $E = 0$ near a static beam?

d) Does $I = \beta c\lambda$?

D. F. Bartlett and P. G. Brabeck
Department of Physics, University of Colorado, Boulder CO 80302
and

E. Bleser
National Accelerator Laboratory, Batavia IL

Scientific Correspondent: D. F. Bartlett

February 14, 1972

II Experimental Justification

Much effort has already been devoted to the study of the long range fields near a beam of moving particles. Ionization chambers, electrostatic pickup plates, tuned rf cavities, and Faraday cups have all been used successfully to monitor beam intensities. The phenomena of energy loss by ionization, small angle scattering, and bremsstrahlung are manifestations of long range electric forces and are all found to be adequately explained by existing theory. Finally, Coulomb's law, the Lorentz transformation, and the superposition principle are all one needs to predict the E and H fields around a beam of particles.[1] Why then should we want to study these fields in detail?

It is true that classical electromagnetic theory would have to be modified were an anomaly to be found in the proposed experiment. We feel, however, that the sturdiness and beauty of the present theory should not be a barrier to our undertaking. Rather we should ask what features of the proposed experiment have already been tested. The answer is that only one measurement: namely the invariance of charge to motion has been well tested. The observed neutrality of atomic helium and molecular deuterium shows that for velocities less than two tenths the speed of light, the charge of the proton differs from its "rest" charge by no more than 1 part in 10^{20}.[1] At higher energies, electrostatic pickup monitors of the internal beam at the Cosmotron, PPA, ZGS and PS have shown no fall-off with time during the accelerating cycle (at the level of a few percent).[2] Finally, even in the TeV range of energies a particle's momentum as determined by a magnet ($\Delta P/p \propto q$) agrees with its momentum as determined by ionization loss or small angle scattering ($\Delta P/p \propto q^2$).[3] We do not know of any experiments that bear directly on the measurements B , C or D described below.

We also do not know of any similar experiment being planned elsewhere. For us the advantage of NAL is that it is the highest energy proton accelerator. (We are prejudiced in believing that the proton is more likely than the electron to have an anomalous long range field). By mounting our apparatus in the main ring of NAL, we hope to monitor a current which is comparable to LAMPF though inferior to ISR. Both these machines have of course a lower energy than NAL. The constancy of the current at ISR would be advantageous for some of our planned experiments and detrimental to others.

III Experimental Arrangement

The experiment consists of four related measurements made in an apparatus placed in one long straight section.

A) Monitor and Test of Charge Invariance

Suppose that the charge of a proton Q were not a constant but a function of the proton's velocity $Q = Q(v)$. If the proton beam passes through an isolated conducting shell, the potential of this shell will vary slowly during the acceleration cycle.[4] Our planned arrangement is that of figure 1, below. The beam passes through holes in upstream and downstream copper hemispherical shells. The potential differences, V_u and V_d between these hemispheres and a concentric grounded sphere are measured. The sum $\overline{V_u + V_d} \approx 100$ mV for the designed beam intensity of 5×10^{13} protons/pulse. Of course the initial beam from the accelerator is not likely to be this intense. The Johnson noise limit of our voltmeter however is about 10nV so we should be able to make accurate measurements even with a beam of 10^{-2} to 10^{-3} of the designed current.

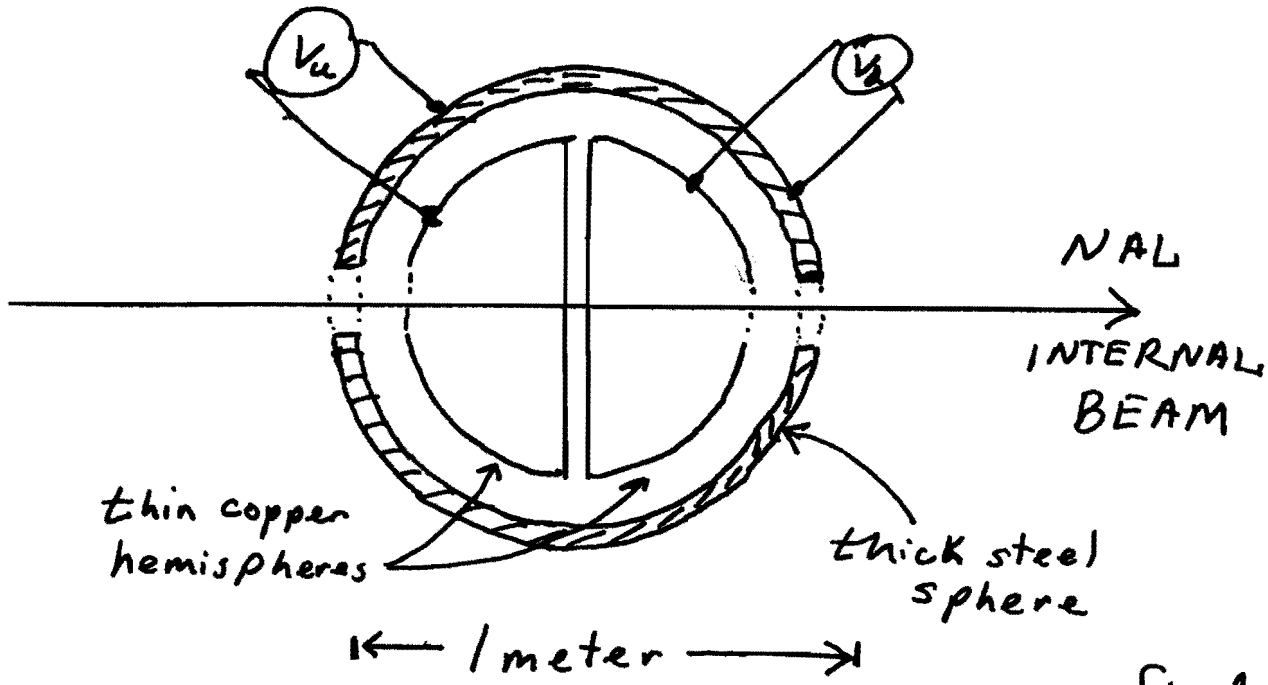

fig 1

B) Curl E = 0?

The difference between the potentials of the upstream and downstream hemispheres $V_u - V_d$ is a measure of a solenoidal term in a steady state E field. Imagine for instance that the electric field for an ultra-relativistic single charge were not peaked at 90 degrees to its direction of motion but rather at 89 degrees. Then for a steady current of such particles, curl $E \neq 0$ and $V_u - V_d \approx 0.01\ (V_u + V_d) \approx 1$ mV, an easily detectable potential.

C) Div E = 0?

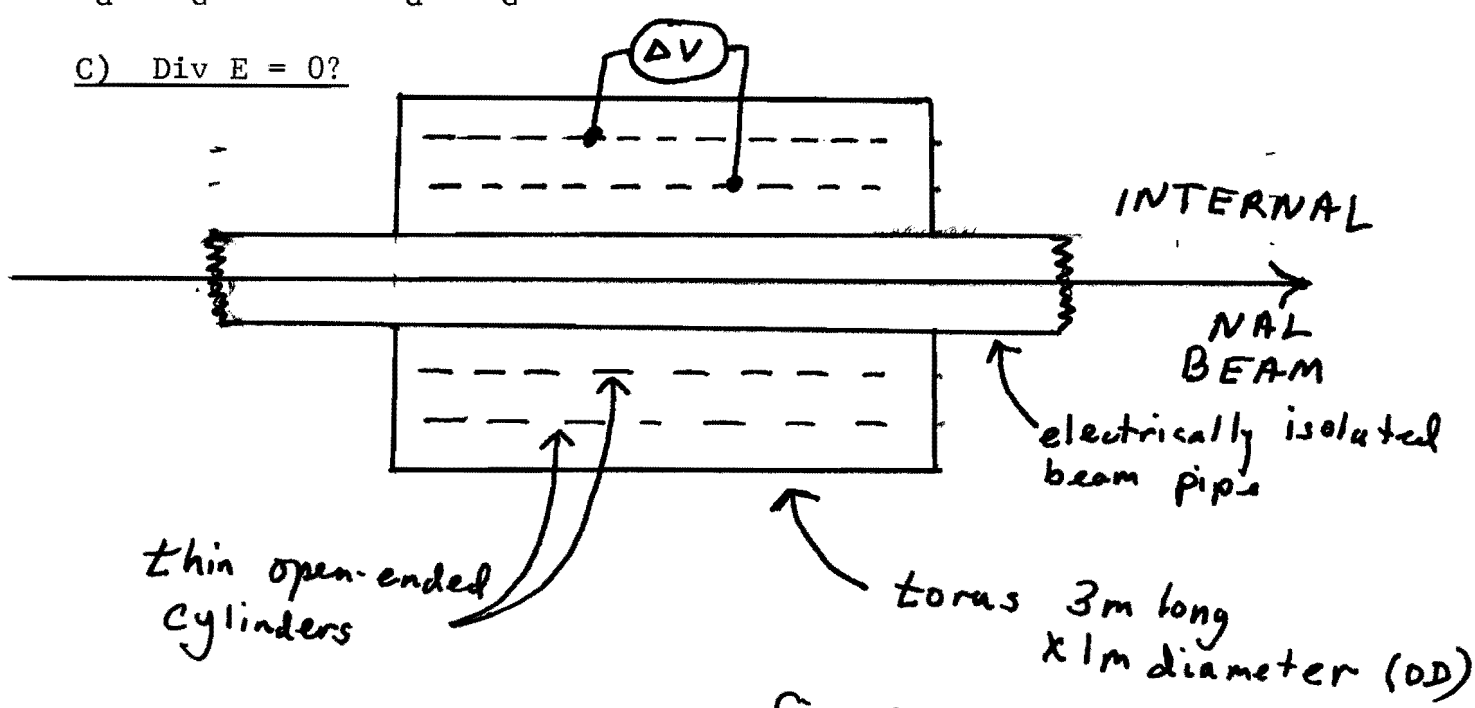

fig. 2

Is the radial dependence of the E field near the beam simply $E_r \alpha 1/r$ as predicted by Coulomb's law? This question is investigated by measuring the potential difference ΔV between two long thin coaxial cylinders inside a torus whose inner diameter is the beam pipe. If the cylinders are uncharged, ΔV should equal 0. But if the electric field around the beam has a radial dependence different from that of the charges induced on the beam pipe, $\Delta V \neq 0$. (See Figure 2)

D) $I = \beta c \lambda$?

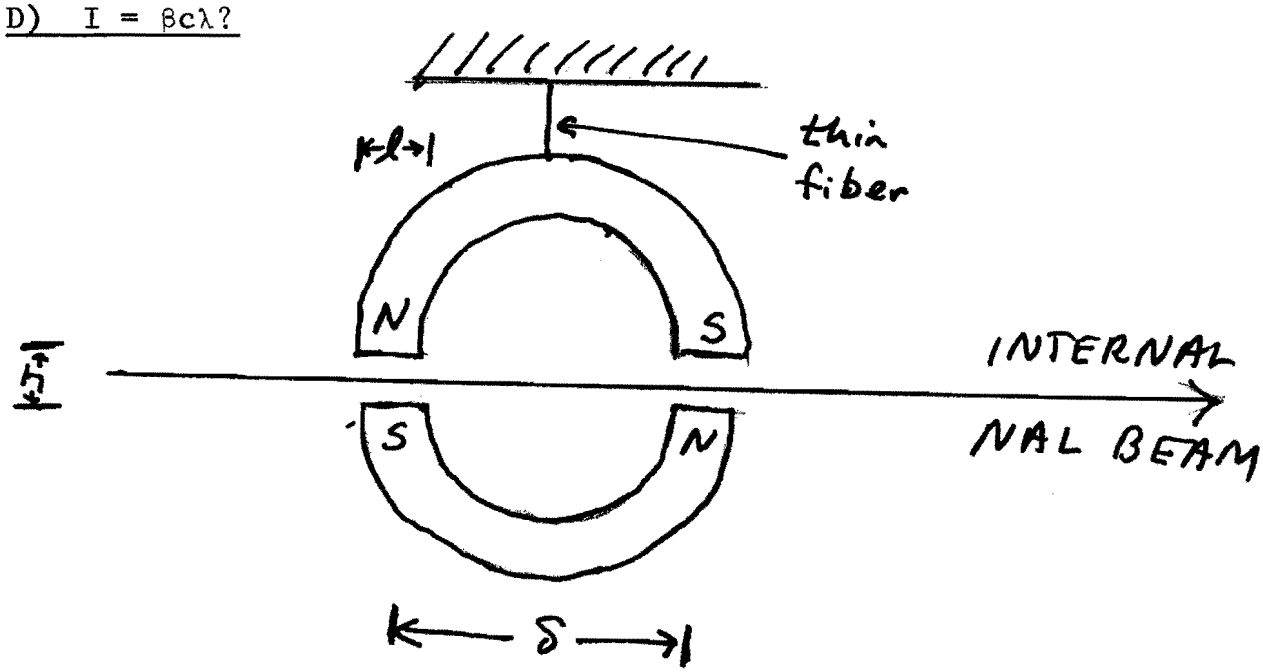

δ = 30cm
h = 7.5cm
l = 10cm
thickness = 10cm

fig. 3

The internal beam current is to be measured absolutely by the torque transmitted to a horseshoe magnet suspended directly over the beam. This current is then compared to the charge density λ as determined in measurement A to test the relation $I = \beta c \lambda$. The beam current is readily detectable. An Alnico magnet of the size

indicated above suspended by a quartz fiber will swing about one degree in response to an average beam current of 20 mA. (Since the time constant of the detector is 10 secs., however, it will integrate over beam fluctuation whose period is less than a fraction of a second). In practice, we plan to "buck out" the beam current with a measurable ohmic current in a pipe coaxial with the beam. The ohmic current is to be adjusted so that there is no net torque on the horseshoe magnet.

Readout and Running Time

The basic amplifier necessary for all the measurements save the last is a commercially available FET amplifier with an input impedance of 10^{12} ohms. The analogue output of this amplifier will be scanned by a signal averager (Hewlett Packard 5480B or equiv.). The averager divides the relevant portion of the machine cycle into 1000 channels, stores a digitized reading of the measured voltage in each of these channels, and sums over many beam bursts. Finally, every half hour or so the output of the signal averager is to be read out on tape, processed by a small computer or read out on line to the NAL PDP 10. (Assuming that funds are available to buy a signal averager, on-line hookup is not necessary).

The time required to run this experiment is almost identically the time necessary to "debug" the apparatus. We plan to construct and test most of the equipment at the University of Colorado, but there are bound to be many background problems at NAL. We are anticipating some such problems:

a) Nearby cables carrying current for the main ring magnets will dramatically perturb the horseshoe magnet if the latter is not well shielded.

b) Protons lost during the acceleration cycle can give a spurious signal if they stop in our thin voltage detectors.

c) The lowest resonance frequency of the spherical detector is about 250 MHz. It is conceivable that a harmonic of the 50 MHz rf could excite this cavity.

The equipment could be installed during the summer of 1972 and meaningful results had by the summer of 1973.

IV Apparatus

We plan to disturb the vacuum of the main ring as little as possible. Specifically, we propose enclosing the beam in a 6 in. diameter non-conducting pipe as it passes through the spherical detector and in an ellipsoidal metal pipe as it passes between the pole tips of the horseshoe magnet. This work would of course be done at NAL. The status of other facets of the apparatus is given below:

2 mating steel hemispheres 1.0 meter Dia 5 cm wall	Already Built	CU
2 mating copper hemispheres .95 m Dia 0.2 cm wall	"	CU
2 FET amplifiers	Supplemental Request to AEC	CU
low impedance current amp (for measurement D)	"	CU
Signal Averager	"	CU
Torus and cylinders for Msm't C		NAL
Magnetic Shielding		NAL
Particle Shielding (if req'd)		NAL
Remote area for data acquisition		NAL
Read out box for Signal Averager	Supplemental Request to AEC	CU
Overall Layout		NAL

FOOTNOTES

1) For a particularly clear discussion of minimal requirements necessary to derive the E and H fields near a beam see E. M. Purcell, Electricity and Magnetism, McGraw Hill (1963) Chapter 5.

2) See, for instance C. E. Swartz, RSI 24, 851 (1953) and R. L. Martin, p. 43, Symposium on Beam Intensity Measurement, (1968) Daresbury Nuclear Physics Laboratory, Daresbury U.K.

3) Caution must be used, however, in using the well observed motions of particles in electromagnetic fields to make definite statements about the electromagnetic fields of the moving particles themselves. Recall that these motions are given entirely by the Lorentz force law which does not separate e from m, and that the energy and momentum of ultrarelativistic protons are not measured directly (i.e., by a calorimeter and ballistic pendulum respectively) but rather by the motion of the proton in a magnetic field from which its momentum is derived assuming its charge to be constant.

4) Of course premature loss of protons during the accelerating cycle will give a monatonic decrease to this potential. This loss of protons, however, does not affect the suitability of Measurement A to serve as a monitor for measurements B, C, and D.