NAL PROPOSAL No. 150

Scientific Spokesman:
J. K. Walker
Experimental Facilities
National Accelerator Laboratory
Batavia, Illinois 60510

FTS/Commercial 312 - 231-6600 ext 453

STUDY OF TWO PARTICLE DISTRIBUTIONS IN THE SECONDARIES PRODUCED IN PROTON-PROTON COLLISIONS

J. Sauer, R. Shafer, T. Collins, A. Roberts,
D. Theriot, D. Carey, J. K. Walker, J. Johnson

July 8, 1971

STUDY OF TWO PARTICLE DISTRIBUTIONS IN THE SECONDARIES PRODUCED IN PROTON-PROTON COLLISIONS

J. Sauer, R. Shafer, T. Collins, A. Roberts,

D. Theriot, D. Carey, J. K. Walker, J.Johnson

Date: July 8, 1971

Correspondent: J. K. Walker

STUDY OF TWO PARTICLE DISTRIBUTIONS IN THE SECONDARIES PRODUCED IN PROTON PROTON COLLISIONS

ABSTRACT

We propose extending our study of single particle spectra in p-p interactions, to study the two particle distributions of secondaries. The proton-proton interaction is unique in two respects compared with other hadron proton interactions. The proton beam intensity is much greater than any secondary beam intensity and in addition, has a higher energy. Secondly, in proton-proton collisions due to the symmetry in the center of mass system, observations of the low energy single particle secondaries in the laboratory system permit a complete study of the single particle spectra. We propose studying the two particle spectra in which the two particles have longitudinal cms momenta of opposite sign. This results in one particle having less than 2.4 GeV/c in the laboratory and the other particle generally having >>10 GeV. The low momentum particle will be detected with the spectrometer which we are presently constructing. The high momentum particle will be detected with a total absorption nuclear cascade detector. Mass identification on the high energy will not be made.

The object of this experimental proposal is to find clear cut qualitative features of high energy hadron-hadron collisions as they are displayed in two particle cross sections. These results coupled with our presently approved study of single particle spectra will provide many of the basic qualitative features of high energy strong interaction dynamics.

I. JUSTIFICATION

There does not exist a real theory of strong interactions at present. The models of high energy processes that one studies are no substitute for such a theory. It is the aim of this experimental proposal, coupled with Proposal No. 63 to help characterize the general features of multiple particle production independently of any model.

We propose studying

$$p + p \rightarrow a + b + \text{anything}$$

where a, b, can be any one of the following particles π^+, π^-, K^+, K^-, p or $\bar{p}$. For the purpose of this proposal we shall concentrate on a discussion where a is a proton and b is any of the long-lived charged hadrons. Of course, we will simultaneously record data with particle a as a pion or kaon.

There is a well known analogy which links multiparticle production cross sections to the multiparticle distribution functions of a classical gas. The scaling laws predicted by the multiperipheral model may be introduced via this analogy. In addition, the conceptual development of the Feynman parton model of high energy collisions depended to a significant extent on this analogy. Finally, the thermodynamic model of Fermi and Hagedorn is largely based upon the analogy. In a real gas a knowledge of the density and density correlation functions (as a function of temperature and pressure, say) determines all the properties of the gas of practical interest. By analogy, a knowledge of the density and density-density correlations of the

"elementary particle gas" at high energy should be invaluable in characterizing its properties.

The density of the gas is simply the invariant single particle spectrum for the scattering problem (this will be different for the different species of secondary particle π^+, K^- --). The density-density correlations of the gas correspond to the two particle correlation function (again this will be different for different species of particles). In this way, the gas analogy makes clear that any attempt to study multiple production should include experiments on the single particle distributions and the two-particle correlation functions.

We shall try now to be more specific and give examples of the type of qualitative features that nature may reveal in these experiments. Consider the diagram

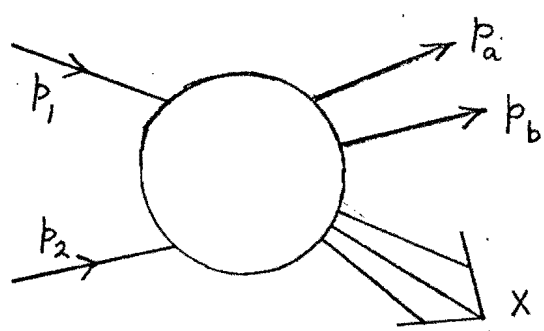

where p_1, p_2 are proton 4-vectors, p_a, p_b are the 4-vectors of the detected particles and x is the undetected hadron state.

The measured differential cross section

$$\frac{d\sigma}{d^3p_a/E_a \; d^3p_b/E_b}$$

is a function (F) of six variables.

We may write these six variables as

$$S = (p_1 + p_2)^2$$

$$x_a = 2p_a^{11}/\sqrt{S}$$

$$x_b = 2p_b^{11}/\sqrt{S}$$

$$|\vec{p}_{a\perp}|$$

$$|\vec{p}_{b\perp}|$$

and $\vec{p}_{a\perp} \cdot \vec{p}_{b\perp}$

The basic question is: what simple features does the function F exhibit at high energy?

We list some features that have been suggested in the last year. At this stage we should acknowledge stimulation by the ideas of Ken Wilson of Cornell on possible experiments on multiple production.

1. <u>Scaling Hypothesis</u>:

$$\left.\frac{d\sigma}{\sigma T}\right|_{\substack{S \to \infty \\ x_a,\, x_b \text{ fixed} \\ \vec{p}_{a\perp},\, \vec{p}_{b\perp} \text{ fixed}}} \sim \frac{d^3p_a}{E_a}\,\frac{d^3p_b}{E_b}\, F\,(x_a,\, x_b;\, |\vec{p}_{a\perp}|,\, |\vec{p}_{b\perp}|;\, \vec{p}_{a\perp} \cdot \vec{p}_{b\perp})$$

In other words, at high enough energy the function F becomes a function of 5 rather than 6 variables; -- the S dependence drops out.

2. <u>dx/x Proposed Law</u>:

$$\left.\frac{d\sigma}{\sigma T}\right|_{\substack{\text{large fixed } S \\ \vec{p}_{a\perp},\, \vec{p}_{b\perp} \text{ fixed}}} \sim \frac{d^3p_a}{E_a}\,\frac{d^3p_b}{E_b}\, F$$

where it is proposed that F may be a constant for x_a, $x_b \lesssim 0.3$.

3. Proposed Factorization Law:

$$F\ (S,\ x_a,\ x_b; |\vec{p}_{a\perp}|, |\vec{p}_{b\perp}|,\ \vec{p}_{a\perp} \cdot \vec{p}_{b\perp})$$

$$= I\ (S)\ G(x_a,\ x_b)\ H(|\vec{p}_{a\perp}|\ \vec{p}_{b\perp}|, |\vec{p}_{a\perp} \cdot \vec{p}_{b\perp})$$

4. Correlation Lengths:

1 Here one studies, for example

$$\frac{d\sigma}{\sigma_T}\ \Bigg|\ \begin{array}{l} S \text{ large and fixed} \\ \vec{p}_{a\perp},\ \vec{p}_{b\perp} \\ x_a \text{ fixed} \end{array}$$

as a function of x_b.

One can compute the two particle correlation function g from this data.

We define

$$g\ (S,\ x_a,\ x_b,\ |\vec{p}_{a\perp}|, |\ p_{b\perp}|,\ \vec{p}_{a\perp} \cdot \vec{p}_{b\perp})$$

$$= F\ (S,\ x_a,\ x_b,\ |\vec{p}_{a\perp}|\ |\vec{p}_{b\perp}|,\ \vec{p}_{a\perp} \cdot \vec{p}_{b\perp})$$

$$- f_a\ (S,\ x_a,\ |\vec{p}_{a\perp}|)\ f_b\ (S,\ x_b,\ |\vec{p}_{b\perp}|)$$

where $f_a\ (S,\ x_a,\ |\vec{p}_{a\perp}|)$ and $f_b\ (S,\ x_b,\ |\vec{p}_{b\perp}|)$ are the single particle spectra functions of particles a and b. Qualitatively, the most interesting property of the correlation function is if it exhibits a correlation length, i.e., see if it goes to zero for large $S_{+-} = (p_a + p_b)^2$. For the purpose of computation of rates in this proposal we shall assume that the correlation function g is zero.

5. Azimuthal Dependence

We define the angle ϕ as

$$\phi = \cos^{-1} \frac{\vec{p}_a \cdot \vec{p}_b}{|\vec{p}_a| \; |\vec{p}_b|}$$

The basic question of interest here is the dependence of the amplitude F on the azimuthal angle ϕ. This question will be studied as a function of x_a, x_b, $\vec{p}_a$ and $\vec{p}_b$.

These are some examples of clear cut qualitative features that may emerge for the structure of the production amplitude F in this type of experiment. Of course, similar qualitative features should emerge from the study of the single particle spectra. No doubt nature is more subtle than we can anticipate and will provide us, after much hard experimental effort, with different but more rich insights into the structure of the hadron hadron scattering amplitude. We believe that discovering the general characteristic features of these processes is more important than having precise numerical data on particular processes (e.g. 5 body final states) just to test a particular model. Finally, we hope these characteristic features that are discovered will give a profound insight into our understanding of strong interaction theory.

II. APPARATUS

A double focussing magnetic spectrometer is being constructed for studying the single particle distributions in proton-proton interactions. The solid angle accepted by the spectrometer is about 0.2 millisteradian and the maximum operable momentum

is 2.4 GeV/c. The momentum band pass of the spectrometer is about 7% and individual particle momenta will be determined to about +1.0%. The angular resolution for particles traversing the spectrometer is about ±2 milliradian. The angular range over which the spectrometer operates is 5° to 175° in the laboratory system. The angular range corresponds to covering essentially all of the backward hemisphere in proton-proton collisions up to 500 GeV incident protons. Particle mass determination is achieved with four Čerenkov counters. The entire spectrometer sits on a rolling platform whose over-all length is only 24 feet. Figure 1 shows the layout of the spectrometer and Table 1 gives the design characteristics.

A 1 cm thick liquid hydrogen target will be used. The proton beam intensity will be measured using several monitors and it is anticipated that eventually reliable relative monitoring of the beam will be achieved at about the ±1-2% level of accuracy at all proton beam energies. Good relative beam monitoring is required to study the energy dependences of the distribution functions (breaking of the scaling laws). The small (?)s dependent effects are probably vitally important in understanding the approach to asymptopia. We consider that in this respect our study will have a distinct advantage over similar work at the I.S.R.

The fast forward hadron will be detected using a total absorption nuclear cascade (TANC) detector. This detector is a series of sheets of iron (about 2½" thick) and sheets of scintillator. The length and radius of the detector is large enough such that the hadron incident upon the detector has all

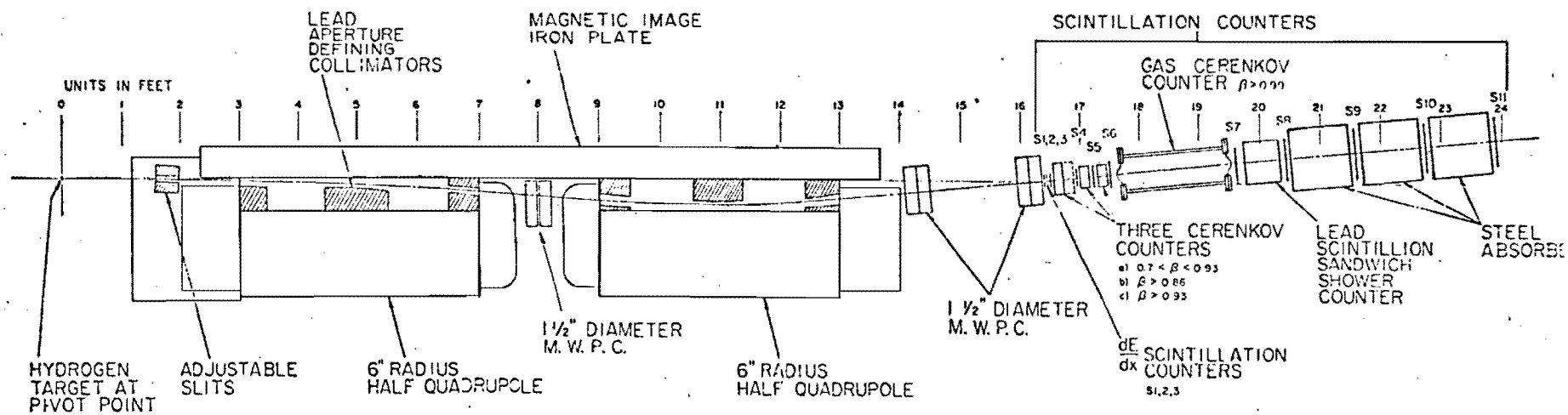

2.4 GeV/c SPECTROMETER

Fig. 1

TABLE 1

BASIC SPECTROMETER CHARACTERISTICS	
MAXIMUM MOMENTUM	2.4 GeV/c
HORIZONAL ANGULAR ACCEPTANCE	5.0 m.rads.
VERTICAL ANGULAR ACCEPTANCE	40.0 m.rads.
SOLID ANGLE ACCEPTANCE	0.2×10^{-3} ster.
MOMENTUM ACCEPTANCE	7.3 %
SPATIAL RESOLUTION M.W.P.C.	± 0.5 m.m.
MOMENTUM RESOLUTION	± 1.2 %
PRODUCTION ANGULAR RESOLUTION	±2 m.rads.
NUMBER OF HALF QUADRUPOLES	2
POWER REQUIREMENT (MAX)	100 KW
TOTAL LENGTH	24 FEET

of its energy absorbed by the detector. A small TANC detector constructed and tested at CERN is shown schematically in Fig. 2. The total length of steel in this case was only 80 cm and the hadron cascade was sampled 20 times. The pulse heights, corresponding to the energy deposited, in each scintillator, are summed up and it was shown that the pulse height is proportional to the incident hadron energy. The variation of energy resolution with energy appears to be approximately E^{-1}, however, for the purpose of this proposal we shall assume a somewhat more conservative $\sqrt{E}$ variation. This results in an energy resolution of ±5% at 100 GeV and we shall assume above 100 GeV that the resolution remains approximately constant at ±5%.

The characteristics which make a TANC detector particularly appropriate for this first study of two particle distributions are:

a. Large solid angle of acceptance.

b. Broad band momentum acceptance (essentially 100%).

c. An energy resolution which is quite adequate for this type of physics where we are interested in discovering the major qualitative features of the process.

d. The detector is extremely simple in construction and inexpensive compared with ANY type of magnetic spectrometer capable of analyzing up to 500 GeV/c particles.

e. It is an easy mechanical job to move the TANC detector around the beam line to study the ϕ dependence of the two particle distribution. The same is not true of a >hundred GeV magnetic spectrometer.

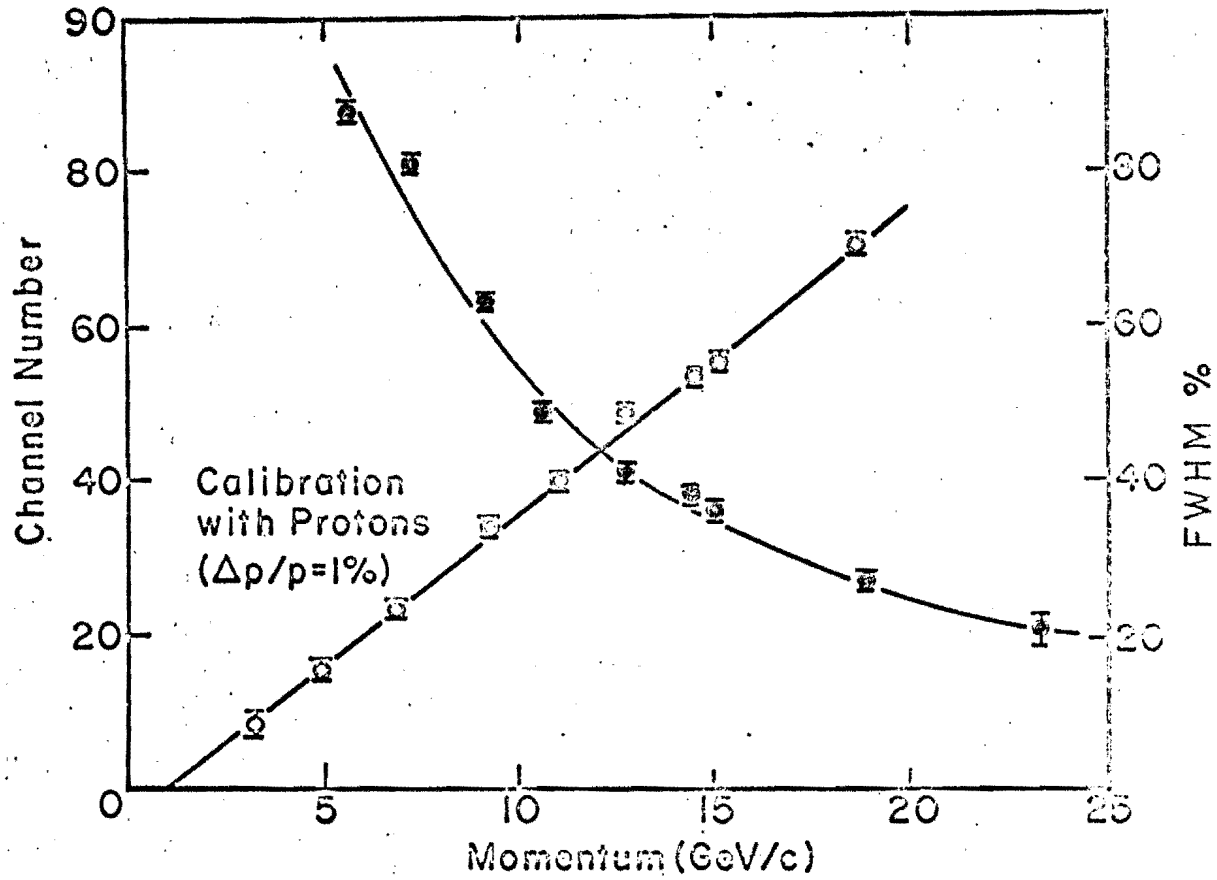

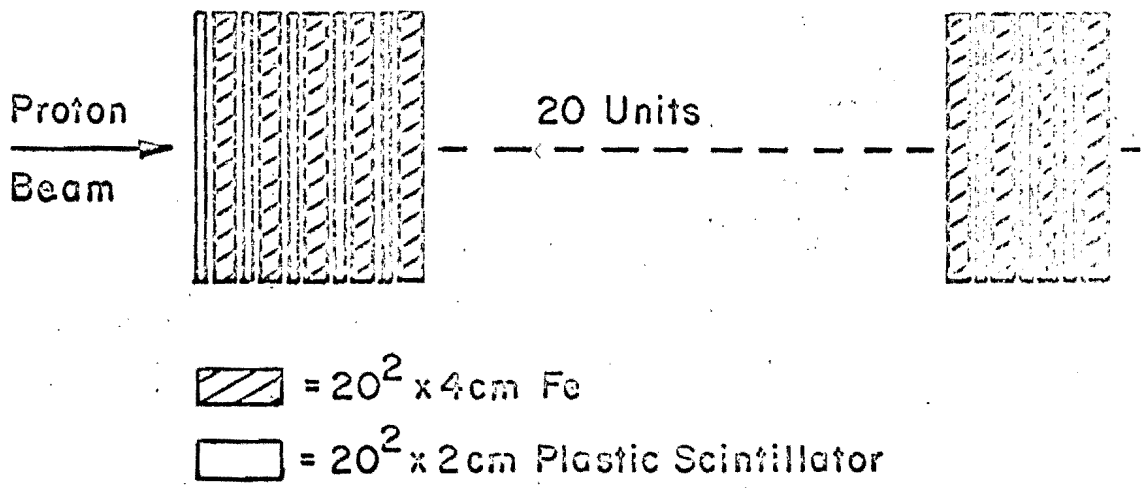

Hadron Cascade Total Absorption Counter

Fig. 2

We propose constructing a TANC whose dimensions are 1' x 1' x 10' with sampling every 2-1/2". It has been shown by the Cal Tech neutrino group (B. Barish - private communication) that this will result in a uniformly sensitive area of detector of about 6" x 6". The TANC is shown in more detail in Figure 3.[1]

The proposed experimental layout is shown in Figure 4. The TANC detector is located 200' downstream from the target. The beam pipe between the target and the TANC increases in radius from 3" to 2'. The angular resolution of hadron detection in the TANC detector is determined by a 10 x 10 counter hodoscope. The resulting angular resolution is about ±0.15 mrads. With a 0.5 cm diameter beam spot at the target we expect the angular divergence of the beam to be somewhat less than ±0.15 mrads. This provides good resolution on the transverse momentum. For example, if we consider a 100 GeV hadron being detected at say 3.0 mrads to the incident beam we have

$$p = 300 \text{ MeV/c}$$

$$\Delta p = \pm 15 \text{ MeV/c}$$

For the same event we will have $x = 2\, p_L\, (\text{cms})/\sqrt{S}$ $\approx 0.5 \pm 0.025$ for ±5% energy resolution at 100 GeV and we are assuming here that the incident proton beam has 200 GeV/c momentum.

Figure 5 shows the region in $p_\perp$, x space which the TANC detector covers at each angular setting. In addition, some typical detector resolutions are indicated by the boxes.

= 1' × 1' × 2 1/2" Fe

= 1' × 1' × 1/4" PLASTIC SCINTILLATOR

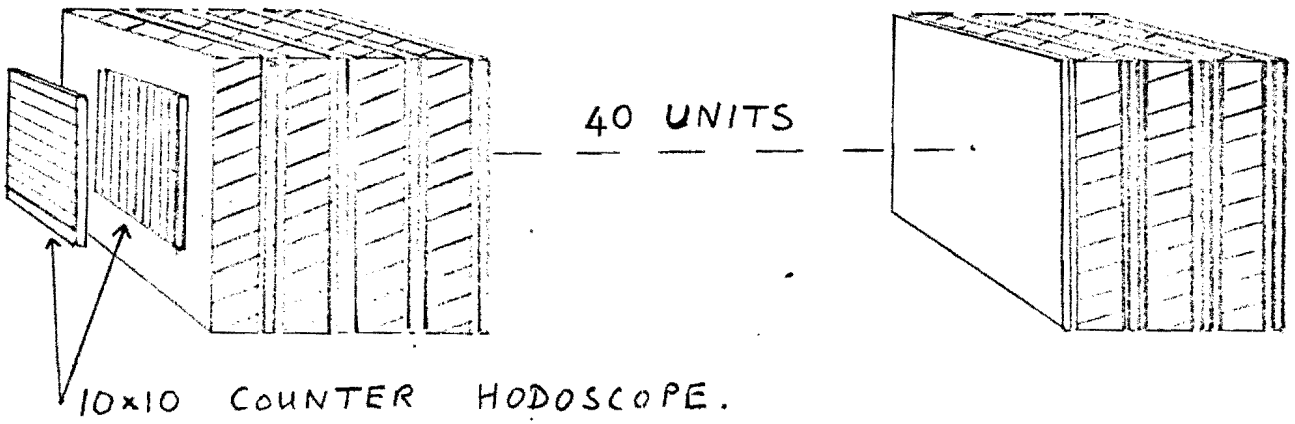

TOTAL ABSORPTION NUCLEAR CASCADE (TANC) DETECTOR

Fig 3

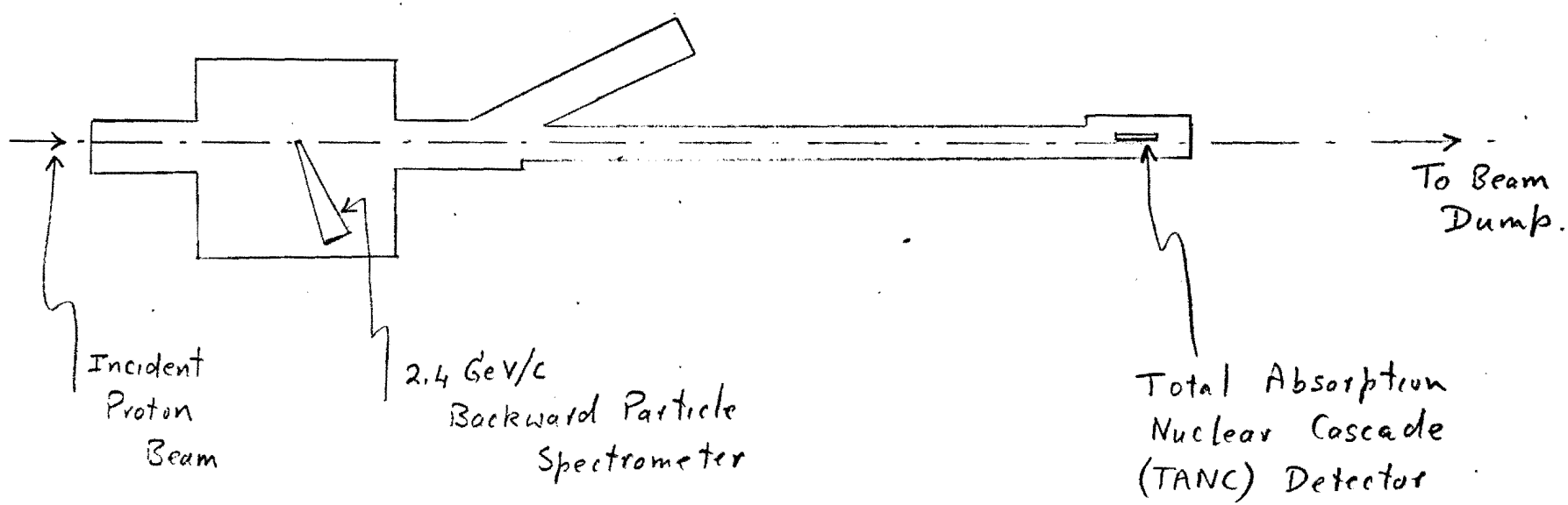

Proton Laboratory (Left Section)

Fig. 4

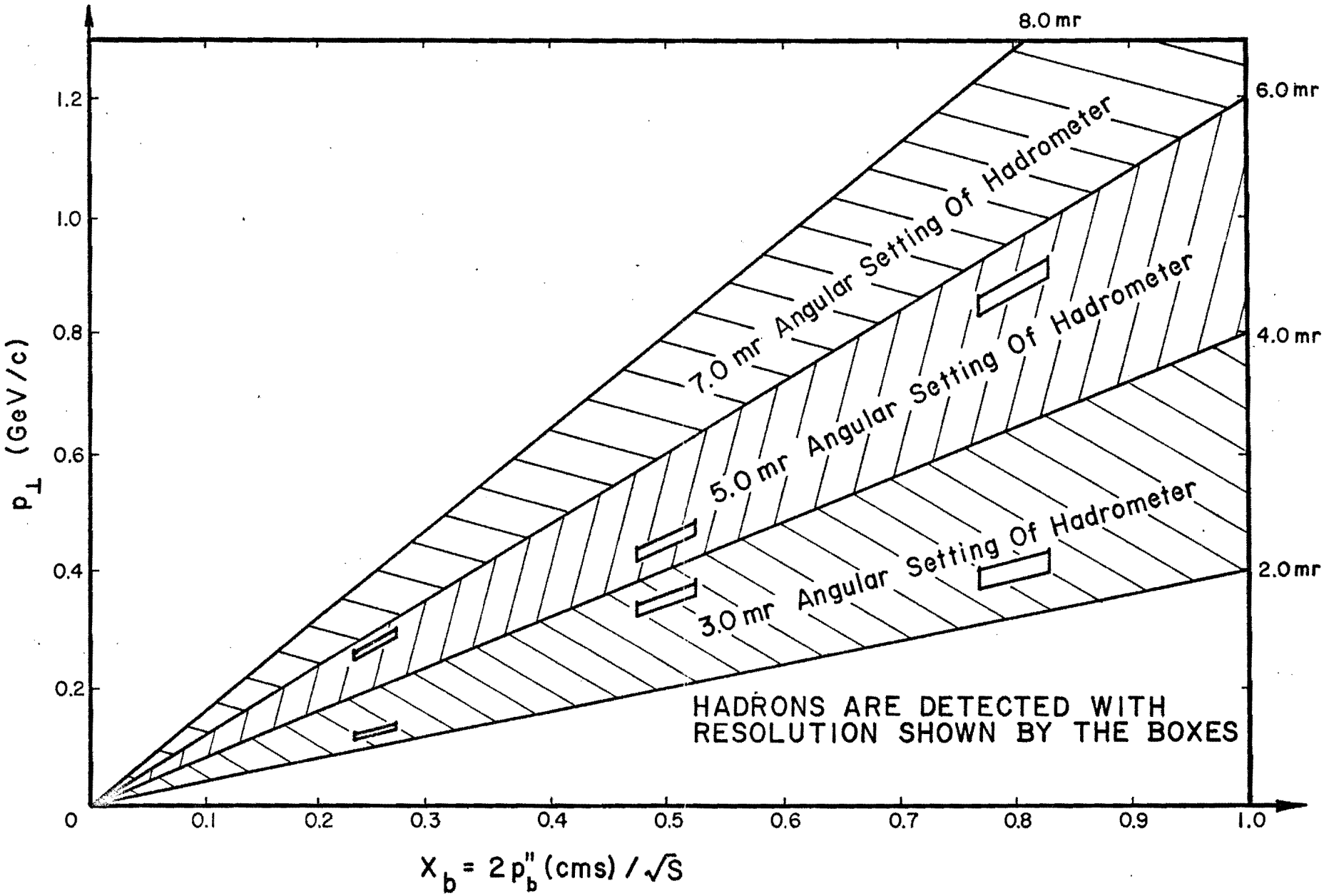

ACCEPTANCE IN PHASE SPACE OF PARTICLE 'b' BY THE TANC DETECTOR

FIGURE 5

III. RATES

We consider an incident beam of 200 GeV/c (the detection system works equally well at 500 GeV/c) and an intensity of 10^{10} protons per pulse. With a hydrogen target 1 cm thick there are about 10^7 interacting protons per pulse.

1. Backgrounds

Consider first the TANC detector located at 3.0 mr which will be the position where the simple singles counting rate is highest. Figure 6 shows the momentum spectrum of protons and pions produced at 3.0 mr based on the Hagedorn-Ranft model. The solid curve shows the predicted distribution of the sum of both signs of charged pion and protons. It can be seen that the distribution is smooth and quite slowly varying over the range 20 to 180 GeV/c corresponding to $0.1 \lesssim x_b \leq 0.9$. In fact, the summed hadron distribution only varies by about ±30% in this interval. We have folded the anticipated energy resolution function of the TANC detector into the summed hadron distribution. We find that the difference between the predicted distribution and that which we expect to observe is less than 3% at all momenta. The experimental resolution therefore produces a small effect on the distribution and can easily be corrected in the analysis of the data. Similar hadron distributions are shown in Fig. 7 for the TANC detector at 5.0 mr.

Integration of the summed hadron cross section over all momenta at 3.0 mrad gives 12.3×10^{-3} hadrons per microsteradian per interacting proton. Hence within the 5 μsterad

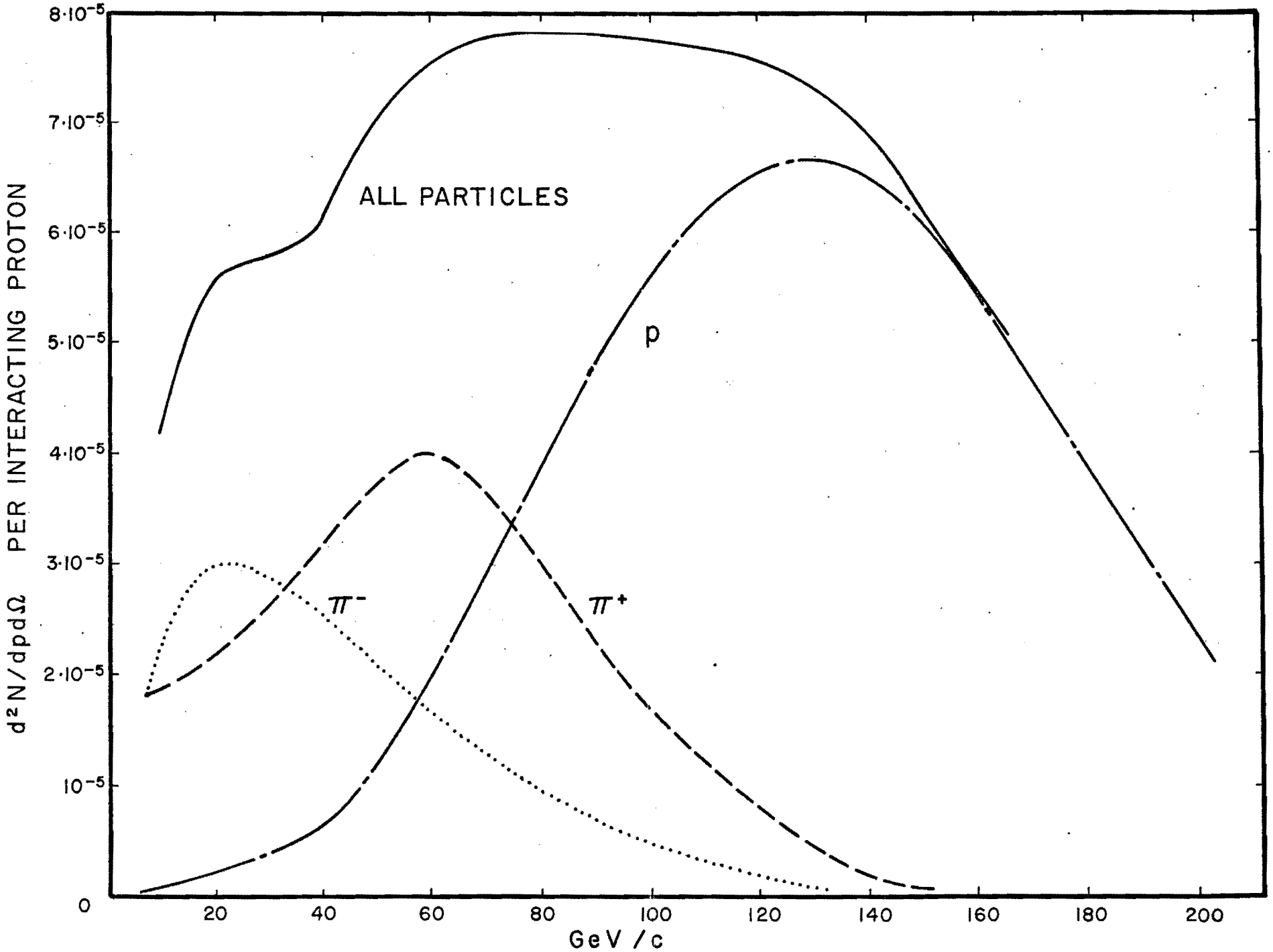

NUMBER OF PARTICLES PER GeV/c μ STERADIAN PER INTERACTING PROTON AT 3 mr

FIGURE 6

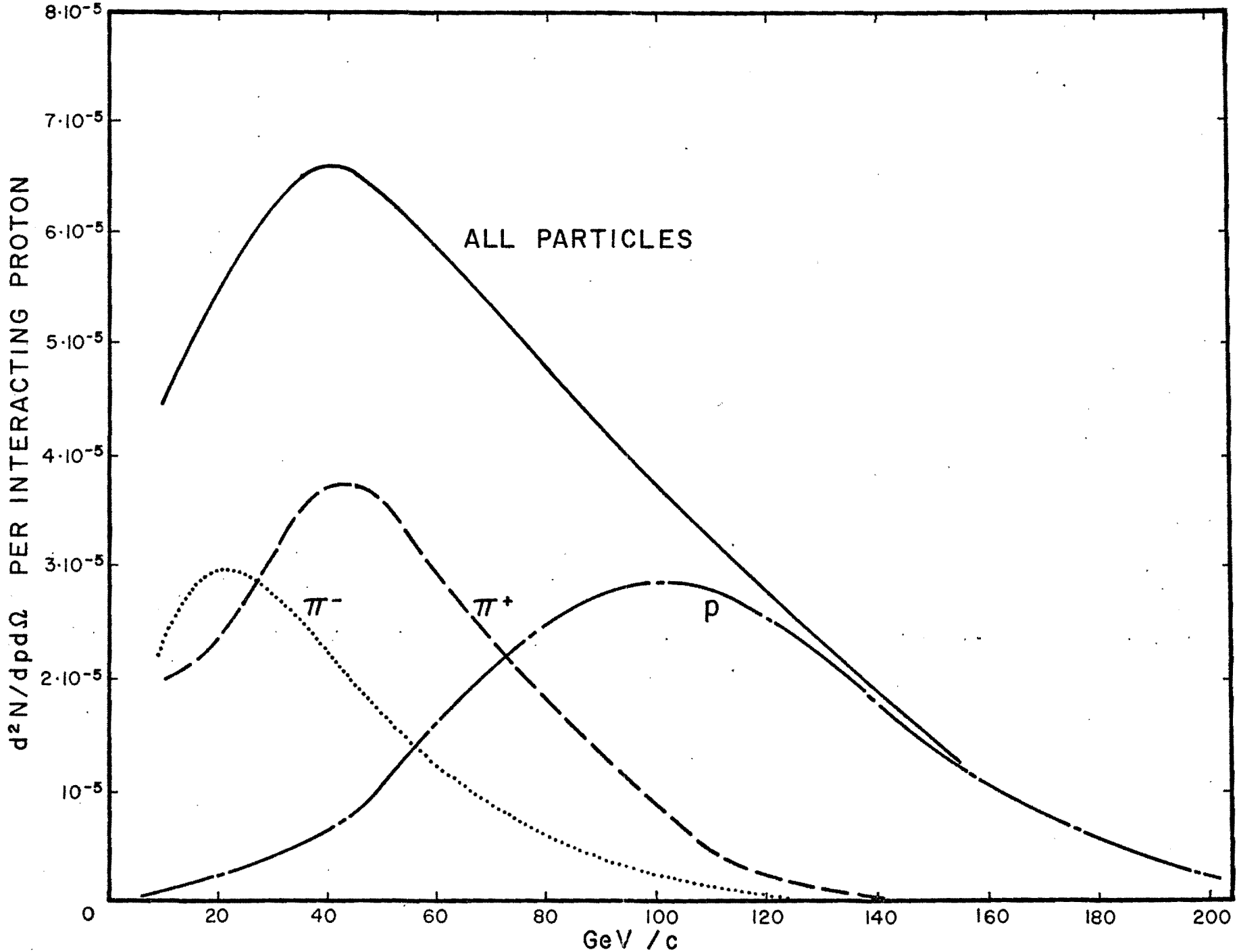

NUMBER OF PARTICLES PER GeV/c μ STERADIAN PER INTERACTING PROTON AT 5 mr

FIGURE 7

acceptance of the TANC detector we expect 6.2×10^{-2} counts per interacting proton.

Consider now the proton detection rate in the 2.4 GeV/c spectrometer. Figure 8 shows the Hagedorn-Ranft predicted proton spectra at various laboratory angles as a function of momentum. We have chosen three widely separated angle momentum combinations of the spectrometer as typical operating conditions. These are indicated by boxes in Fig. 8 and subsequently in Fig. 9. In particular, the choice of 5° and 2.4 GeV/c leads to a proton counting rate of

$$\frac{d^2N}{dpd\Omega} \times \Delta p \times \Delta\Omega$$

$$= 36 \times 10^{-5} \times (7.3 \times 10^{-2} \times 2.4) \times 0.2$$

$$= 1.26 \times 10^{-5} \text{ protons/pulse per interacting proton}$$

We may now calculate the correlated and uncorrelated coincidence rates between the 2.4 GeV/c spectrometer and the TANC detector.

a. Correlated Coincidence Rates

We assume that the correlation function g (as defined earlier) is zero. Hence the correlated coincidence (true) rate is the product of the two single particle rates. Thus the true rate for proton detection at 5° and 2.4 GeV/c in coincidence with an event in the TANC detector at 3.0 mrads

$$= 1.26 \times 10^{-5} \times 6.2 \times 10^{-2}/\text{interacting proton}$$

$$\simeq 8 \text{ events per pulse with } 10^7 \text{ interactions per pulse.}$$

These events are distributed over the range of x_b and $p_\perp$ of the acceptance of the TANC detector (see Figure 5).

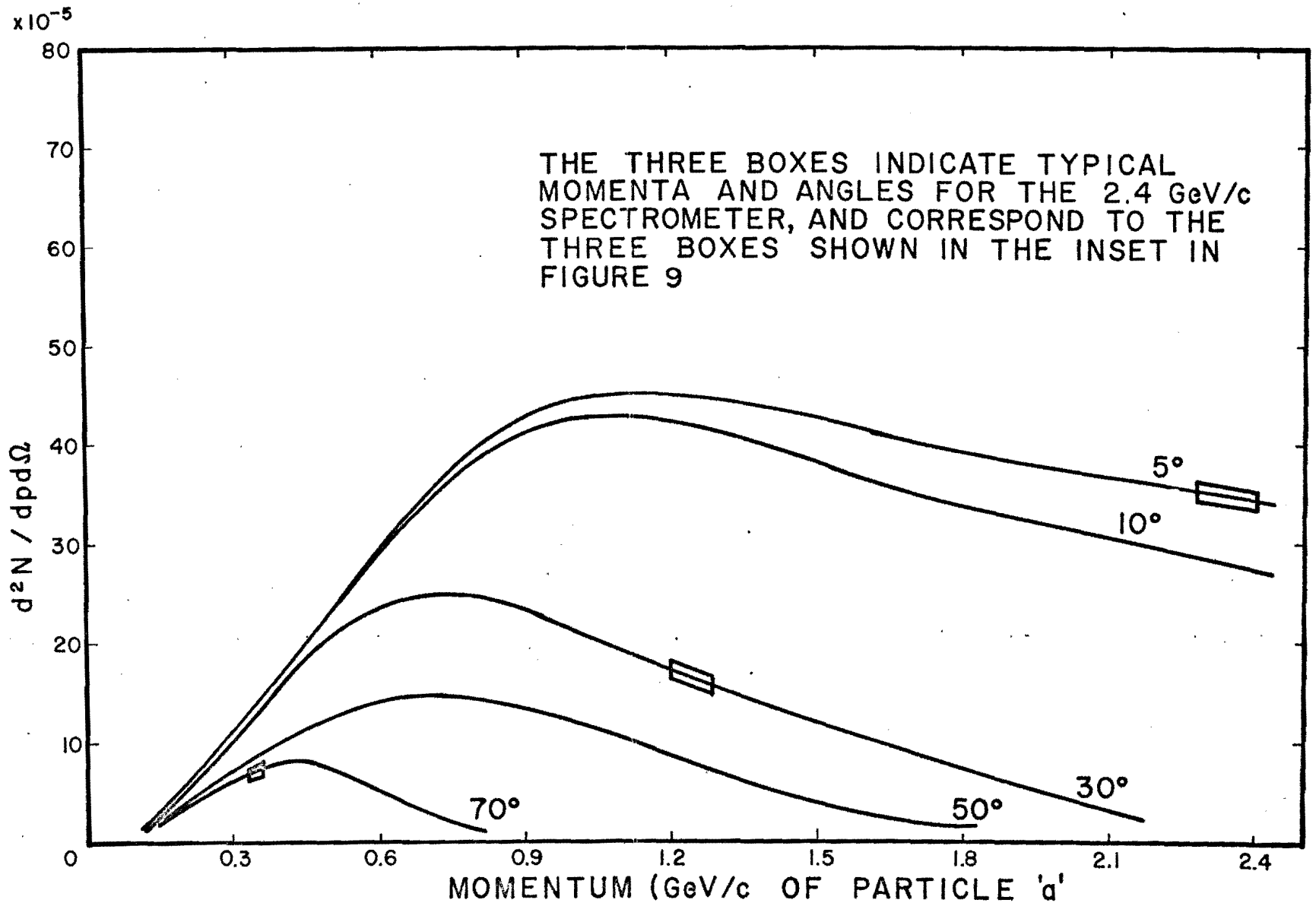

NUMBER OF PROTONS PER MILLESTERADIAN PER GeV/c PER INTERACTING PROTON AT SEVERAL LAB ANGLES.

FIGURE 8

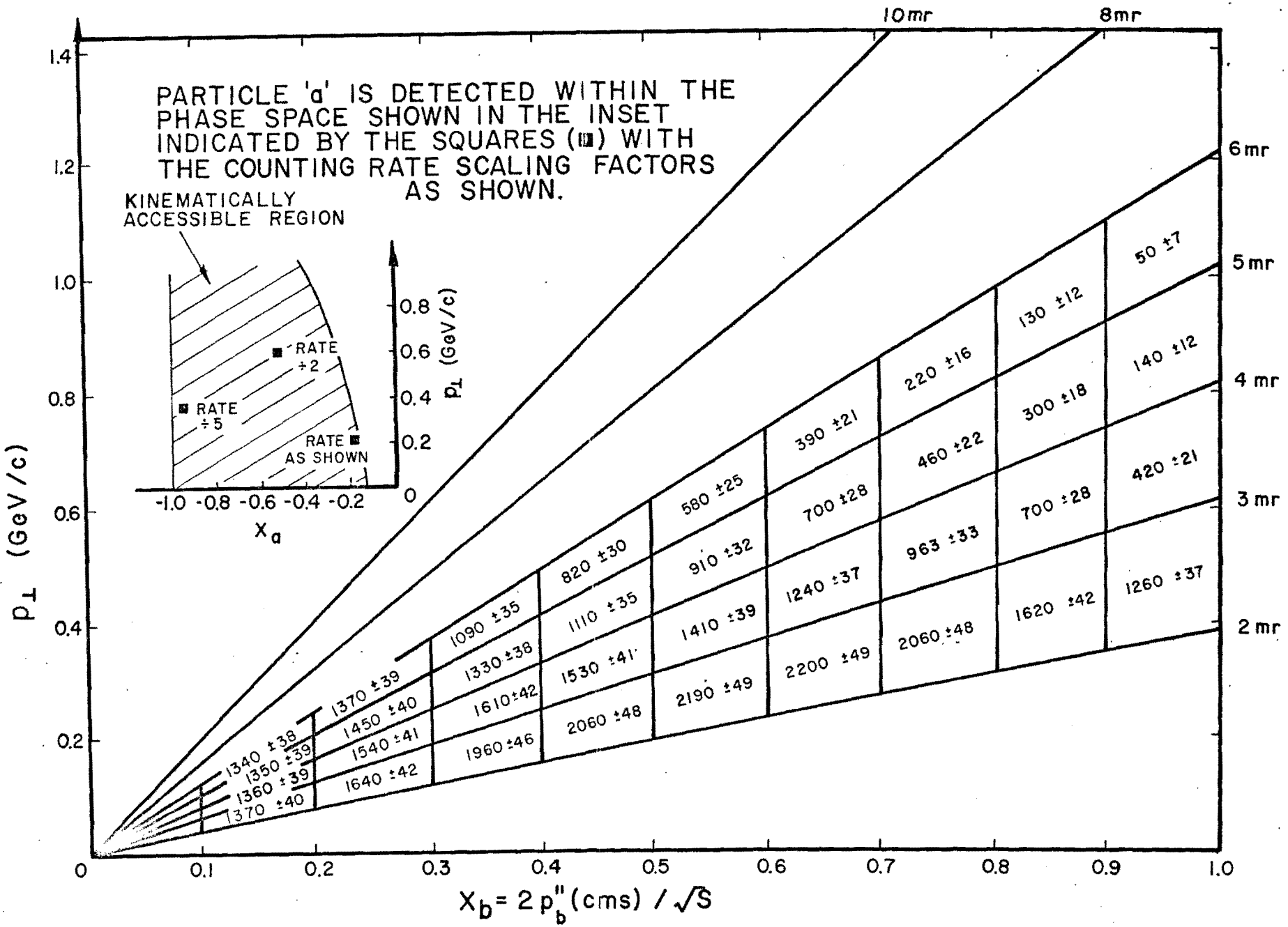

RATES FOR PARTICLE DETECTION IN $p + p \rightarrow a + b +$ ANYTHING
WHERE a = PROTON b = HADRON
(4 HOUR RUN)

FIGURE 9

b. Uncorrelated Coincidence Rates

The uncorrelated or random coincidences are determined by the resolving time of the coincidence system between the two detectors and by the effective time during which the beam pulse occurs. For these two numbers we take 5.0 nanoseconds and 0.5 seconds respectively. These numbers are realistic and achievable. The resulting uncorrelated coincidence rate for the above conditions is

$$(1.26 \times 10^{-5} \times 10^{7}) \times (6.2 \times 10^{-2} \times 10^{7})$$

$$\times \frac{5 \times 10^{-8}}{0.5} \text{ events per pulse}$$

$$= 0.8 \text{ events per pulse}$$

This results in a random rate which is an order of magnitude less than the true coincidence rate.

Figure 9 shows the data which will be accumulated in a four-hour run. The data has been binned in boxes which are several times the detector resolution width in both x_b and $p_\perp$. The errors shown on the data rates include the contribution from the subtraction of the 10% uncorrelated background. It can be seen that about ±3% accuracy in most bins can be achieved within four hours.

The over-all rates are reduced by factors of two and five for the two other coincidence configurations for particle 'a' that are shown in Fig. 9.

We therefore anticipate that useful data can be accumulated with high accuracy over a large range of the variables $x_a, p_{a_\perp}, x_b, p_b$ and of course ϕ.

IV. DATA INTERPRETATION

The quantity measured in this experiment is the cross section for two particle detection

$$d\sigma_{a,b} = \frac{d^3p_a}{E_a} \frac{d^3p_b}{E_b} F(S;\ x_a,\ x_b; |\vec{p}_{a\perp}|, |\vec{p}_{b\perp}|; \vec{p}_{a\perp}\cdot\vec{p}_{b\perp})$$

Figure 10 shows the regions of phase space in which the measurements will be made. Phase I of this experiment measures the single particle distributions for negative x_a.

$$d\sigma_a = \frac{d^3p_a}{E_a} f_a(S;\ x_a,\ |\vec{p}_{a\perp}|)$$

Particle identification is made in these measurements. Due to the symmetry of the proton proton interaction the single particle 'b' cross-section

$$d\sigma_b = \frac{d^3p_b}{E_b} f_b\ (S;\ x_b, |\vec{p}_{b\perp}|)$$

(where 'b' refers to the sum of charged hadrons) is completely defined from our single particle 'a' measurements.

Thus we will know the functions F, f_a and f_b over the regions shown in Figure 10.

The two particle correlation function

$$g = F - f_a \cdot f_b$$

can then be obtained from our data. In addition, the various qualitative features discussed earlier can be studied in detail over the range of variables shown in Figure 10.

V. CALIBRATION

The most simple reaction to study with at least two

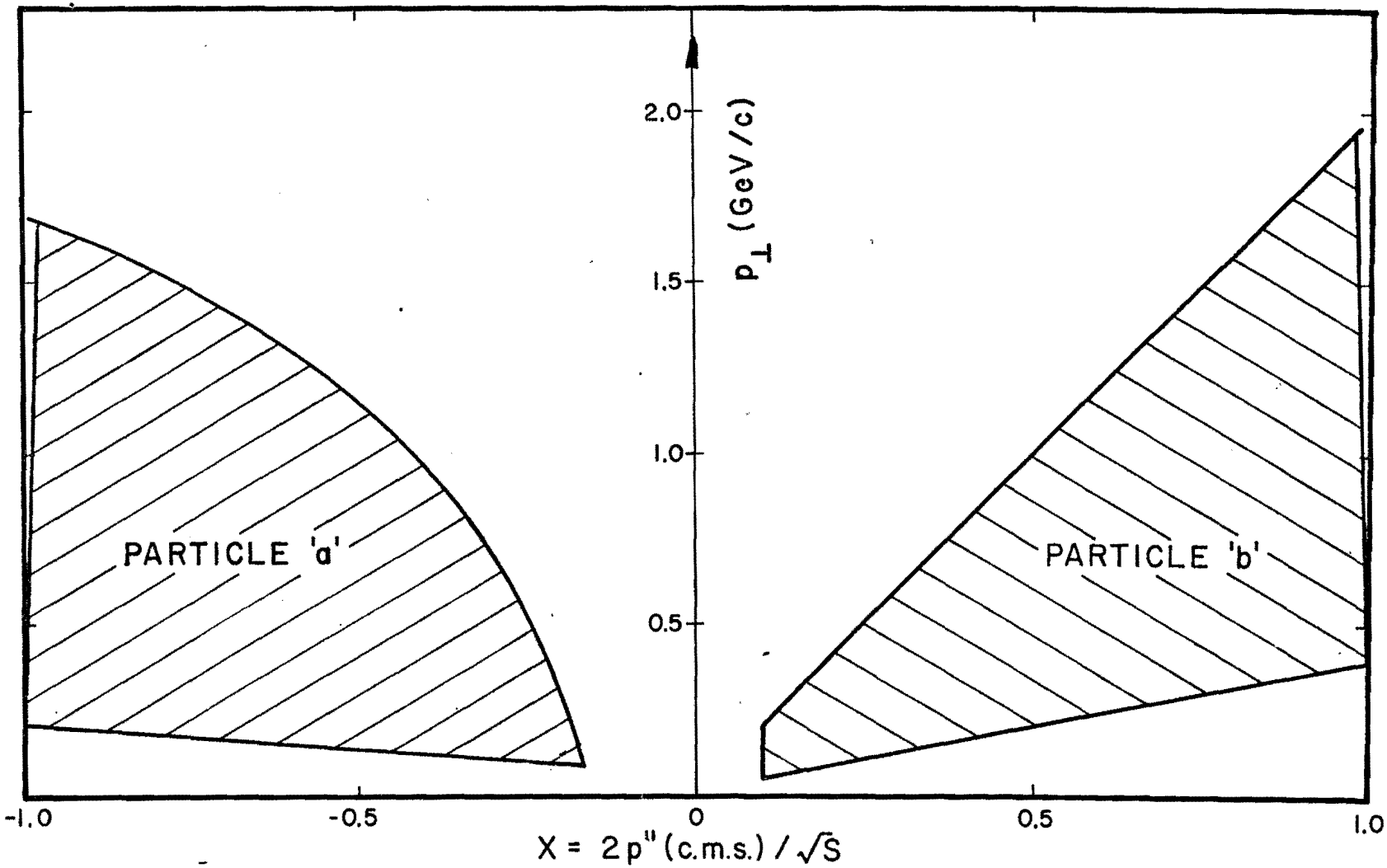

REGIONS OF THE KINEMATIC VARIABLES WITHIN WHICH MEASUREMENTS OF THE TWO PARTICLE CROSS SECTION FOR $p+p \rightarrow a+b+$ ANYTHING CAN BE MADE. THIS GRAPH IS FOR THE CASE OF 200 GeV INCIDENT ENERGY.

FIGURE 10

particles in the final state is the elastic proton proton scattering. In this case $x_a \approx -1.0$, $x_b \approx +1.0$, and $\vec{p}_a = -\vec{p}_b \lesssim 1.5$ GeV/c- this corresponds to the outermost boundary of the acceptance regions shown in Fig. 10. It is anticipated that by the time this experiment is performed there will have been several measurements on the elastic process in this energy range. These measurements will be done at both NAL (experiments #'s 7, 50, 69, 73) and at the I.S.R. It is unlikely that this proposal will add to our knowledge on the elastic process in a significant way. On the other hand, we would like to use the elastic process as a tool to check our understanding of

a) Energy calibration and resolution function of the TANC detector with the normal background conditions of the two particle inclusive experiment.

b) Electronic resolving times, discrimination levels, pulse pile-up, etc.

c) Due to the coplanarity of the elastic process, it provides a stringent check of our over-all geometric alignment and angular calibration of the two detectors.

For these reasons we consider the elastic process as an ideal tool to calibrate our equipment.

The rates for elastic scattering are high. Typically the rate is several hundred events per pulse with $|\vec{p}_a| = 0.5$ GeV/c. Thus the rate is quite adequate to do a rapid calibration of the entire detection system.

VI. TIME SCHEDULE

We anticipate that the major part of the single

particle spectra (Phase I) data will be taken by October 1971. We propose that installation of the TANC detector should proceed shortly thereafter. We request 150 hours of parasitic test time in November and December 1972. For a general survey of the two particle distributions we request 300 hours of beam time at 200 GeV and 300 hours at 400 or 500 GeV. This data collection can begin early in 1973.

To meet this schedule, construction of the TANC detector should begin in July 1972.

VII. REQUIREMENTS FROM NAL

a) Beam time as indicated above.

b) Construction funds for the TANC detector. We estimate a cost of $25K for this item.

c) It is essential to have adequate space at the location of the TANC detector. The design of the Proton Laboratory should take account of this requirement.

It can be seen that the requirements for this exploratory investigation of this kind of physics are quite nominal.

SUMMARY

At this stage, we believe the physics justification to study two particle correlations in hadron-proton collisions is very strong. The proton-proton scattering is a particularly appropriate first case for studying these correlations due to good beam qualities and very simple, inexpensive and well tried detection techniques being required. We believe it is important at this stage that the design of the Proton Laboratory

should take this proposal into account.

It is our conviction that these two phases of the experiment, namely, single particle spectra and two particle correlation spectra, will yield many of the most important qualitative characteristics of high energy hadron dynamics.

[1]The TANC detector does not provide any mass or charge identification. Detection of neutral long lived hadrons (e.g. K_L^o and neutrons) would be accomplished using about 5" of iron and a veto counter immediately in front of the 10 x 10 counter hodoscope.