NAL PROPOSAL No. 102

Correspondent: T. L. Jenkins
Physics Department
Case Western Reserve U.
Cleveland, Ohio 44106

FTS/Commercial 216 - 368-4100

PROPOSAL FOR AN EXPERIMENT TO STUDY THE REACTION $K^- p \rightarrow \bar{K}^\circ n$ AT NAL ENERGIES

W. R. Frisken, T. L. Jenkins, W. M. Smith
A. G. Strelzoff, C. R. Sullivan, W. S. Brockett
G. T. Corlew, A. R. Kirby, E. T. Clark, III

Case Western Reserve University

December 14, 1970

COO-1749-20

Proposal for an Experiment to Study the Reaction $K^- p \rightarrow \bar{K}^o n$ at NAL Energies

We propose to measure $d\sigma/dt$ for $K^- p$ charge exchange from t=0 to $t= -2(BeV/c)^2$ at laboratory energies ranging from 30 BeV to the highest attainable beam energies. The purposes for doing the experiment are:

1. To check the validity of the Pomeranchuk-Okun' rule through the sensitivity of this reaction to the difference between $K^- p$ and $K^- n$ total cross sections.
2. To test the Regge pole predictions for this reaction which are based on ρ and A_2 exchange.

The experimental arrangement consists of a hydrogen target almost totally enclosed in an anti-house and scintillation counters and proportional chambers to detect the decay of the K_s^0. We propose initially to run at 30, 45, 60, 75, and 90 BeV in a beam of 10^6 particles/pulse with $\Delta p/p$ of .5%. The K^-/π^- ratio should be about 2%. An allotment of 600 hours will allow an accumulation of 10^4 events at each energy setting and adequate tune-up time.

Senior Experimenters:

W. R. Frisken, T. L. Jenkins, W. M. Smith, A. G. Strelzoff, C. R. Sullivan

Graduate Students

W. S. Brockett, G. T. Corlew, A. R. Kirby

Technician:

E. T. Clark, III

Case Western Reserve University Cleveland, Ohio

14 December 1970

Telephone (FTS and Commercial): (216) 368-4100

I. Theoretical Motivation for the Experiment

A. Test of the Pomeranchuk-Okun' Rule.

The experiments of Allaby et al.,[1] (figure 1) indicate sizable differences remaining at Serpukhov energies between K^-p and K^-n total cross sections. The prediction that $(\sigma_{K^-p})-(\sigma_{K^-n})\to 0$ as lab energy goes to infinity is known as the Pomeranchuk-Okun' rule.[2] It implies that at asympototically high energies total cross sections are independent of isotopic spin or, stated another way, that all charge exchange cross sections should vanish at high energies. The prediction that $(\sigma_{K^+p})-(\sigma_{K^-p})\to 0$ at infinite energy is well known as the Pomeranchuk theorem[3] which states that particles and anti-particles on the same target should have the same cross sections.

The Serpukhov cross section differences mean either that the two theorems are violated in the K-nucleon system or that asymptotic energy has not yet been reached.

By the optical theorem and charge independence, differential $K^-p \to \bar{K}^0n$ charge exchange in the forward direction is given by

$$\left.\frac{d\sigma}{dt}\right|_{t=0} = \frac{\pi}{k^2}\,(\mathrm{Real}(K^-p)-\mathrm{Real}(K^-n))^2 + \frac{1}{16\pi}(\sigma(K^-n)-\sigma(K^-p))^2$$

where Real(K^-p) and Real (K^-n) are the real parts of the elastic forward scattering amplitudes of the respective reactions.

Present data are consistent with the real parts being zero. Thus a measurement of $d\sigma/dt$ at $t=0$ is a sensitive, null test of the equality of $\sigma(K^-n)$ and $\sigma(K^-p)$. The difference in the two total

cross sections is measured directly in the same experiment instead of in two separate experiments, and there are no Glauber corrections to consider as there are in deuterium target experiments (necessary to measure $\sigma(K^-n)$).

K^-p charge exchange is a test of the Pomeranchuk-Okun' rule rather than the Pomeranchuk theorem. In π^-p charge exchange, both theorems apply since π^- and π^+ are antiparticles. K_s^o regeneration experiments test only the particle-antiparticle theorem. Thus K^-p charge exchange is a separate piece of information necessary together with the regeneration experiment for an understanding of possible Pomeranchuk violating effects in the K- nucleon system. If the Pomeranchuk-Okun' rule were violated it would mean that vacuum (i.e., I=0) exchange could not dominate high energies.

B. Regge Pole Predictions

Fits to existing K^-p charge exchange data can be made on the assumption of ρ and A_2 exchange and exchange degeneracy (Phillips and Rarita).[4] The phases of the ρ and A_2 are such that the $K^-p \to \bar{K}^o n$ amplitude is purely imaginary. Comparison of the data with measured values of K^-p and K^-n total cross sections bears this out (Figure 2). If this remains so at higher energies, $K^-p \to \bar{K}^o n$ at t=0 is truly a measure of $\sigma(K^-p) - \sigma(K^-n)$. Thus if $d\sigma/dt_{t=0}$ does not go to zero $\sim 1/p_{lab}$ as predicted by ρ exchange, but persists at high energy, this would be an indication not only of a Pomeranchuk-Okun' violation, but also of some strange non-Regge behavior. One

such model of how a violation might occur has been calculated by Barger and Phillips[5] (Figure 3).

We also propose to measure $d\sigma/dt$ out to $t = -2\ (\mathrm{BeV}/c)^2$. This data should be of considerable interest, for example in testing Regge Pole models.

II. Previous Experiments

The present experimental data obtained by the CERN-ETH spark chamber group (Astbury, et al[6]) together with the Regge Pole fits of Phillips and Rarita are shown in Figure 4. From their data we take our expected cross section as $\sigma = 500\ \mu\mathrm{barn}/\mathrm{Beam\ Energy\ (BeV)}$.

III. Experimental Method

A. General

Figure 5 is a plan view of our proposed experimental arrangement. The essence of our method is to surround a hydrogen target with a series of counters to veto charged particles and gamma rays. Then the downstream trigger scintillators detect neutral particles that decay in the decay region; for example $K_S^o \rightarrow \pi^+ + \pi^-$. The measurement region is to make possible an accurate measurement of the π^+ and π^- angles in the lab in order to make a careful reconstruction. Either spark or proportional wire chambers of conventional design will be used to make these measurements. Negative Kaons are selected by gas Cerenkov counters with appropriate thresholds. A

differential counter would provide greater rejection, but threshold counters are adequate provided there is room for them. Whenever a K^- signature is received along with a trigger scintillator pulse and no anti pulse, the track locations in the beam hodoscopes and wire chambers are read into an on-line computer.

Some parameters of our set-up are as follows:

LH_2 target length	3 feet
Length of experiment	$L=E_{beam}$; E in BeV, L in feet.
Wire chamber size	Largest is 3 feet square, rest scaled accordingly (subtends an angle of 50 mrad at the target)
Beam rate	10^6 particles/pulse
K^-/π^- ratio	2%
Total data taking run time	500 Hours
Tune up time	100 Hours
Total time requested	600 Hours
Total events	1×10^4 events/energy setting
Fraction of K_1^o lifetimes covered	2/3
Fraction of $\bar{K}^o$ decays to $\pi^+\pi^-$	1/3
Event rate	0.2 event/pulse at 30 BeV or about 10^4 events in 50 Hours.

This rate estimation assumes there will be no enriched K^- beams available when this experiment is run. We have taken the 3.5 mr beam with

a length of 1300 feet as an example in estimating the K^-/π^- ratio as 2 percent.

B. Background Suppression

The background is of two types:

I) $K^- + p \rightarrow \bar{K}^o + n$ + extra neutral pion(s).

These are events which produce a high energy K^o that fits two-body kinematics and at least one additional π^o that escapes detection by the anti-counters.

II) Reactions with neutrals like:

A. $K^- + p \rightarrow \Xi^o + K^o$

B. $K^- + p \rightarrow K^o + \bar{K}^o + \Lambda^o$

Events of type I are most dangerous if the π^o is low energy. We plan to anti these events with very high efficiency by constructing a heavy liquid Cerenkov counter with which to surround the target in all but the forward direction. This counter will have very poor efficiency for neutrons from $K^- + p \rightarrow \bar{K}^o + n$ and about six radiation lengths for converting the gammas from neutral pions.

Events of type II-A are accompanied by a slow Ξ^o which can not escape the anti house around the target. If events of type II-B include a slow Λ^o they will be vetoed also. If the Λ^o is detected and the K^o's escape, this can trigger the system but is very unlikely to reconstruct properly. Various angular cuts on the data can be used to check for and eliminate the presence of Λ^o's.

The total cross section for reactions II-B is 50 μb at 6 BeV/c.[7] As one goes to higher energy one would expect the "backward" portion of this cross section (i.e. where the Λ receives much of the beam momentum) to diminish rapidly. Therefore, we do not expect this to produce a serious contamination.

C. Reconstruction

The events can be completely reconstructed, even though no magnet is involved, by measuring the angles of the K_s^o decay pions. We considered the use of a magnet but do not feel that it contributes enough to background suppression to warrent the necessary effort, expense and loss of solid angle. Constraints in reconstruction are that the decay is $K_s^o \rightarrow \pi^+ + \pi^-$, that the K_s^o lies in the decay plane and intersects the beam line, and two body kinematics. Each event is once over determined (one constraint fit) except for a small percentage of events whose decay plane is close to the production plane.

The length of the experimental layout is chosen so that the direction cosines of the K^o decay products and the beam particle direction can be measured to an accuracy of about one percent. This assumes a location accuracy of $\pm$ .5 mm in the chambers. This gives $\Delta t = .02\ t$ for most of the data.

D. Beam Particle Identification

It is necessary to reduce the contamination of π^- in the beam to a few percent of the K^- flux. Although a differential

counter would be desireable, threshold counters would be adequate. Since several hundred feet of space are required for the pion anti counters, a number of shorter counters might have to be placed where possible in the beam. These pose no problem since they are low pressure devices and are easy to construct and operate.

IV. Available Equipment

Case Western Reserve can furnish all the equipment for the experiment except the hydrogen target. The target would be of standard design with no special features. We have available all the electronic logic and wire chamber read-out equipment, a PDP-8/E computer, phototubes and scintillators and have facilities for winding proportional wire chambers and constructing magnetostrictive chambers. We would also be willing to construct the necessary threshold beam Cerenkov counters, and help in tuning and developing the beam.

References

1. Allaby et al., Phys. Letters 30B (1969), 500.

2. I.Ia. Pomeranchuk, Soviet Phys. - JETP 3, 306 (1956). L. B. Okun' and I. Ia Pomeranchuk, Soviet Phys. - JETP 3, (1956), 307.

3. I. Ia. Pomeranchuk, Soviet Phys. - JETP 7, (1958), 499.

4. R. J. N. Phillips and W. Rarita, Phys. Rev. 138 (1965), B723; and 139 (1965), B1336.

5. V. Barger and R. J. N. Phillips, Phys. Rev. D 2 (1970), 1871.

6. P. Astbury et al., Phys. Letters 16 (1965), 328; and 23 (1966), 396.

7. D. G. Scotter, et al., Nuovo Cimento 62A (1969), 1057.

Figure Captions

1. Total cross section data on K^-p and K^-n from Allaby et al.[1]

2. $(d\sigma/dt)_{t=0}$ versus K^- laboratory momentum, p_{lab}, for the reaction $K^-+p\rightarrow\bar{K}^o+n$ from Astbury et al.[6]

3. Predictions for $(d\sigma/dt)_{t=0}$ based on conventional ρ and A_2 Regge poles (solid line) and Pomeranchuk theorem violation (dashed curve), from Barger and Phillips.[5]

4. Data of Astbury et al.[6]

5. Plan view of proposed experimental layout.

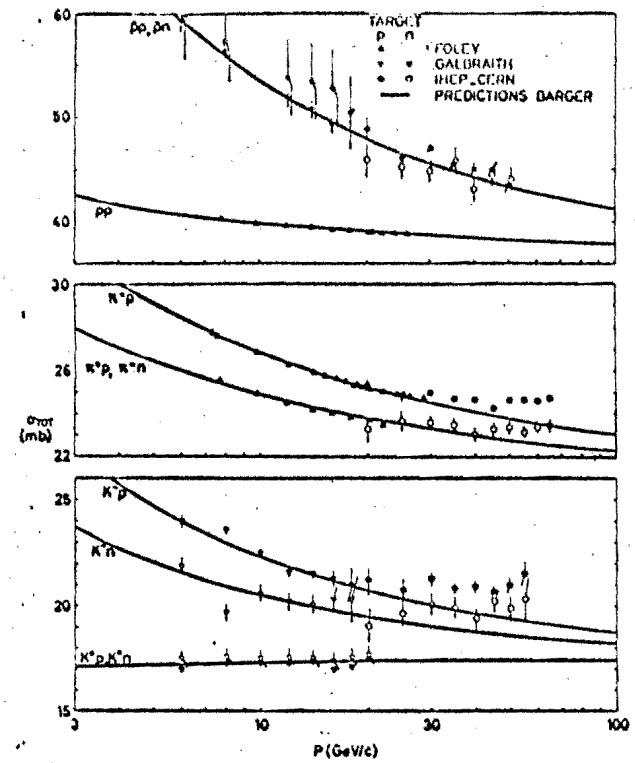

Fig. 1

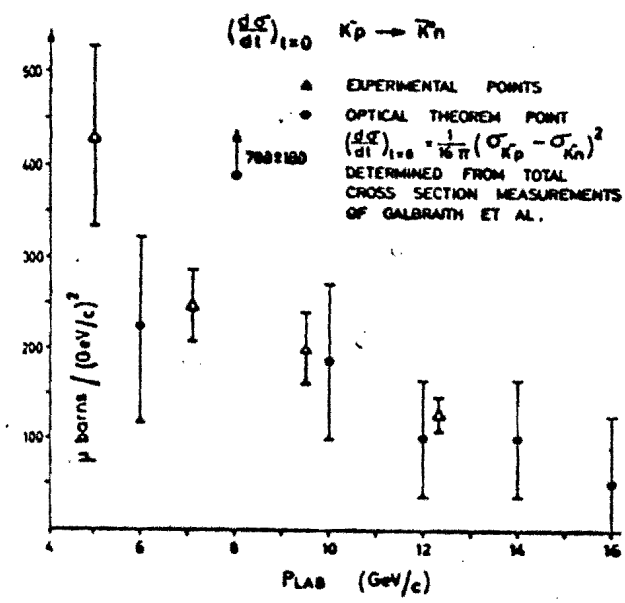

Fig. 2

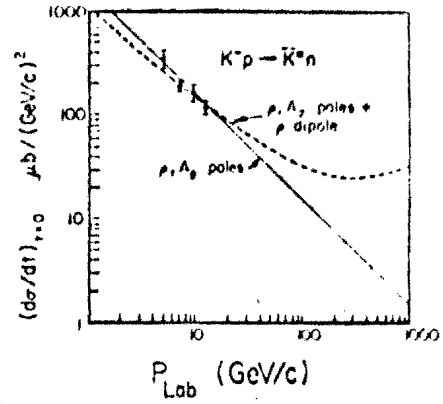

Fig. 3

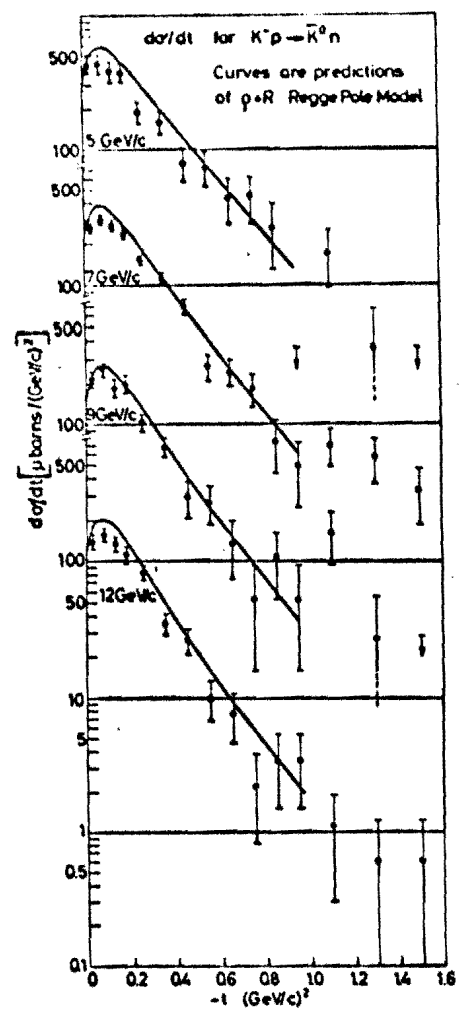

dσ/dt versus momentum transfer $-t$ at 5, 7, 9.5 and 12 GeV/c.

Fig. 4

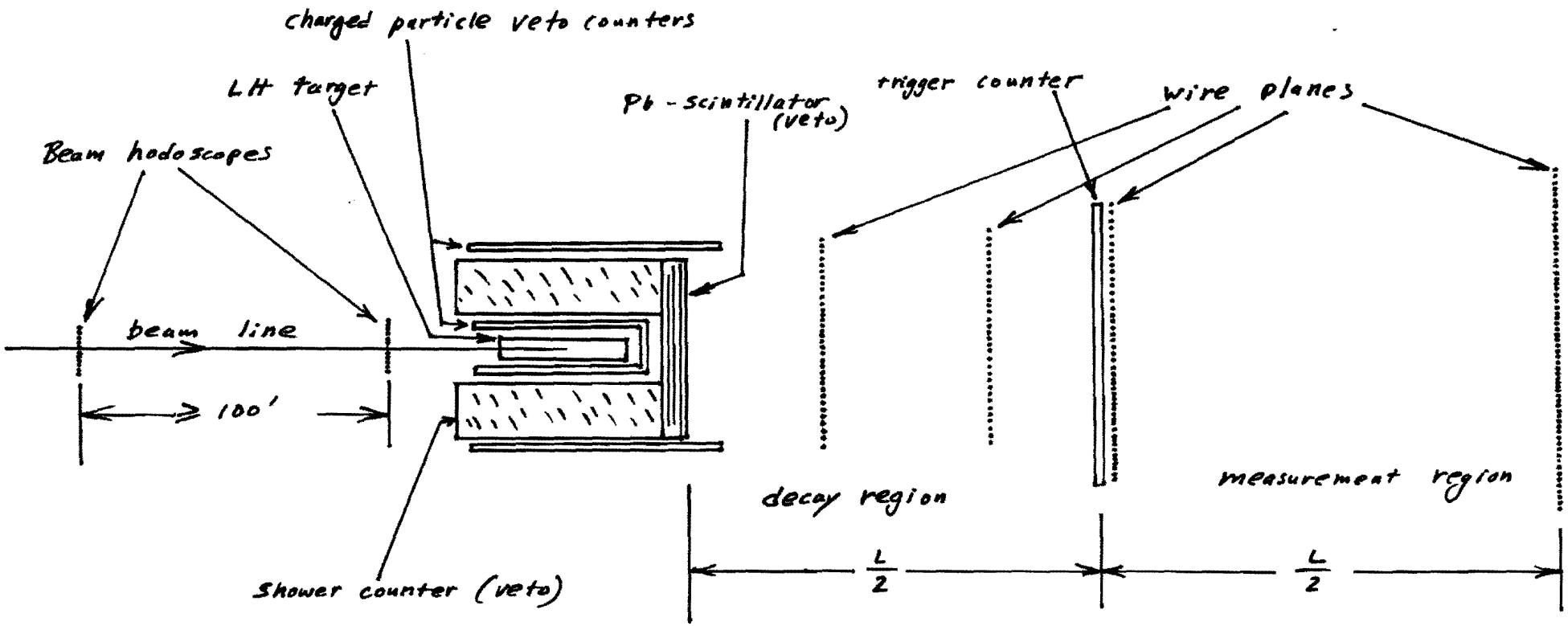
charged particle veto counters
LH target
Pb - scintillator (veto)
trigger counter
wire planes
Beam hodoscopes
beam line
100'
decay region
measurement region
L/2
L/2
Shower counter (veto)

Figure 5