NAL PROPOSAL NO. 87

Correspondent: W. Lee
Nevis Laboratories
P. O. Box 137
Irvington, New York 10533

Commercial: 914-591-8100

PROPOSAL TO SEARCH FOR HEAVY LEPTONS AND INTERMEDIATE BOSONS FROM PHOTON-NUCLEON AND PHOTON-NUCLEI COLLISIONS

W. Lee, J. Appel - Columbia University

M. Tannenbaum - Harvard University

D. Yount - University of Hawaii

L. Read - National Accelerator Laboratory

July 20, 1970

PROPOSAL TO THE NATIONAL ACCELERATOR LABORATORY

PROPOSAL TO SEARCH FOR HEAVY LEPTONS AND INTERMEDIATE BOSONS FROM PHOTON-NUCLEON AND PHOTON-NUCLEI COLLISIONS

W. Lee, J. Appel - Columbia University
M. Tannenbaum - Harvard University
D. Yount - University of Hawaii
L. Read - National Accelerator Laboratory

ABSTRACT

We propose an experiment to search for the production of pairs of heavy leptons and pairs of intermediate bosons in high energy photon interactions with nucleons and nuclei:

$$\gamma + \text{Nucleus} \rightarrow \ell^+ + \ell^- + \text{anything}$$

$$\text{and} \quad \gamma + \text{Nucleus} \rightarrow W^+ + W^- + \text{anything}$$

In this experiment, we will demonstrate conclusively the existence or non-existence of heavy leptons in the mass range from 0.5 to about 7 GeV/c^2. Also, the experiment will demonstrate conclusively the existence or non-existence of an intermediate boson W in the same mass range. Since the photoproduction cross section for intermediate vector boson pairs is very sensitive to the anomalous magnetic moment of the boson, the observation of the rate of production of W's, (if M_W is in the observable mass range $2 < M_W < 7$ GeV/c^2), will enable us to determine the value of the anomalous magnetic moment of the boson.

Correspondent: W. Lee, Columbia University

Date: July 20, 1970

TABLE OF CONTENTS

		Page
I.	Introduction	2
II.	Theory	4
	a) Pair-production cross sections	4
	b) Decay modes, lifetimes	7
III.	Experimental arrangement	7
	a) Tagged photon beam	7
	b) Trigger	8
	c) Event rate calculations	9
	d) Rejection of background events	10
	e) Costs and schedules	10
IV.	Concluding Remarks	10

I. INTRODUCTION

The possible existence of heavier leptons ($\ell^{\pm}$) than the muon and the electron, and of an intermediate vector boson $(W)^{\pm}$ to mediate weak interactions, have been widely discussed in the last few years in the literature.[1] In view of these discussions, we do not need to re-state the obvious importance of an experimental search for the existence of $\ell^{\pm}$ and W in the new energy range which will become accessible at the National Accelerator Laboratory. In brief, we can summarize these searches in the following way:

(a) There is no known reason to believe that the electron and muon constitute a unique family of charged leptons: it will be interesting to learn if they are members of a larger family of charged leptons. In an attempt to further our understanding of these questions, our experiment is designed to demonstrate conclusively the existence or non-existence of other charged leptons, in the mass range $0.5 < m_{\ell} < 7$ GeV/c^2.

(b) Is there a real particle--the so-called weak intermediate vector boson (W) - which carries the weak interaction force in an analogous way to the photon of the electromagnetic force and--in a qualitative sense--to the pion of the strong force? In this continuation of the searches for the existence of the W which were carried out several years

ago, our experiment is designed to demonstrate conclusively the existence or non-existence of the $W^{\pm}$-boson, in the mass range $2 < m_W < 7$ GeV/c^2. This experiment complements the experiment already proposed by some of us (NAL Proposal #70), where the search for the W is carried out over the mass range $7 < m_W < 25$ GeV/c^2.

The design of our (simultaneous) experiments to search for $\ell^{\pm}$ and $W^{\pm}$ is based on the photoproduction of $\ell^{\pm}$ or $W^{\pm}$ pairs by a tagged high-energy photon beam. The cross sections for these reactions

$$\left.\begin{array}{rl} & \gamma + \text{Nucleus (or Nucleon)} \rightarrow \ell^+ + \ell^- + \text{anything} \\ \text{and} & \gamma + \text{Nucleus (or Nucleon)} \rightarrow W^+ + W^- + \text{anything} \end{array}\right\}$$

have been calculated by Y. S. Tsai.[2] We detect the charged decay products of $\ell^+ \ell^-$ (W^+W^-). In particular, we search for the production of two charged particles i.e., $\mu^{\pm}e^{\pm}$, $\pi^{\pm}e^{\pm}$, $\pi^{\pm}\mu^{\pm}$, $\mu^{\pm}\mu^{\pm}$, $e^{\pm}e^{\pm}$. etc., at large transverse momenta, using conventional electronics technique to identify the π, μ, and e, and to measure their momenta and angles of production. The trigger for an $\ell^+\ell^-$ or W^+W^- "candidate" is that two oppositely charged particles, for example, one a μ and the other an e, are produced, both at large angle with respect to the incident photon beam, and both on the same side of the photon beam. (The lepton or boson pairs decay independently, so there is an $\sim$25% chance that both the μ and the e decay products from the separate decays are in the same sense ("left", say). Anti-coincidence counters are placed around the production target,

to confirm the non-production of other particles in the photon-nucleus collision--except for the weakly coupled neutrinos and antineutrinos. Thus, the trigger consists of a $\mu^- e^+$ or $\mu^+ e^-$ pair--with very large individual and total transverse momentum with respect to the photon beam--all of this indicating the separate leptonic decay of two independently decaying massive objects into a lepton plus one (or more) neutrinos and antineutrinos.

The experimental apparatus required for this experiment is identical to what is required for NAL Proposal #70 (Study of Lepton Pairs from P-Nucleus Interactions, Search for Intermediate Bosons and Lee-Wick Structure). Also, most of the authors of this proposal are involved with NAL Proposal #70. Therefore, we would expect to run the experiment proposed here upon completion of that experiment.

The principal facility required at NAL, in addition to the equipment for Proposal #70, is the provision of a high-energy tagged-photon beam (up to k_γ = 300 GeV/c, using 500-GeV protons).

The upper mass limit (between 7 and 9 GeV/c^2) of the sensitivity of this experiment in the search for $\ell^\pm$ and $W^\pm$ is based upon an assumed running time of 1,000 hours.

II. Theory

(a) Pair production cross sections.

The energy-angle distribution of ℓ^+ (or ℓ^-) near the

forward angle $\theta \ll 1$ for a heavy lepton ℓ^+ (or ℓ^-) and for relativistic ℓ's $[E^+ \gg m_\ell$ and $E^- = (k - E^+) \gg m_\ell]$ per nucleon, ignoring nucleon form factor is

$$\frac{d^2\sigma}{dEd\Omega} = \frac{2}{137} r_o^2 \frac{m^2}{m_\ell^2} \frac{E^2\gamma^2}{k^2} \left[\frac{16\ell(1-y)}{(1+\ell)^4} - \frac{(2-y)^2}{(1+\ell)^2}\right.$$

$$\left. - \left[\frac{2-2y+y^2}{(1+\ell)^2} - \frac{4\ell(1-y)}{(1+\ell)^4}\right] \ell n \left(\frac{q_m^2}{m_\ell^2(1+\ell)^2}\right)\right. \qquad (1)$$

where $r_o = 2.818 \times 10^{-13}$ cm = classical electron radius

m = .51 MeV = mass of the electron

m_ℓ = mass of heavy lepton

E = energy of the heavy lepton detected

k = energy of the incident photon

$\gamma = E/m_\ell$

$\ell = \gamma^2\theta^2$

$y = \frac{k}{E}$

$q_{min} = \frac{km_\ell^2(1+\ell)}{2E(k-E)}$ = minimum momentum transfer

Integration of Eq. #1 with respect to the solid angle can be carried out explicitly and yields

$$\frac{d\sigma}{dE} = \frac{4}{137} r_o^2 \frac{m^2}{m_\ell^2} \frac{1}{k} \left[1 - \frac{4}{3}\frac{E(k-E)}{k^2}\right] \left[\ell n \frac{2E(k-E)}{km_\ell} - \frac{1}{2}\right] \qquad (2)$$

Equation 2 can be integrated with respect to E approximately to obtain total cross-section.[2]

$$\sigma = \frac{4}{137} \cdot \frac{7}{9} r_o^2 \cdot \frac{m_e^2}{m_\ell^2} \ell n \frac{k}{m_\ell} \quad . \qquad (3)$$

Table I gives the total pair production cross-section as a function of incident photon momentum and heavy lepton mass.

TABLE I. (σ in unit of 10^{-34} cm^2)

	m_ℓ=1 BeV	3	5	7	9
k=100 BeV	20	1.7	.52	.23	.14
200	23	2.0	.64	.3	.18
300	25	2.2	.71	.33	.2

In Table II we show the minimum momentum transfer squared (q^2_{min}) as a function of incident photon momentum and heavy lepton mass.

TABLE II. ($q^2_{min} = \left(\frac{2m_\ell^2}{k}\right)^2$ in BeV^2)

	m_ℓ=1	3	5	7	9
k=100	.0004	.03	.26	1.0	2.6
200	.0001	.0081	.065	.25	.65
300	.00004	.0033	.029	.11	.29

(Note that we have not included coherent production cross sections in our estimates). The suppression of the cross-sections given in Table I due to the form factor of the nucleon is assumed to be small for $q^2_{min} \lesssim 0.3$ $(GeV/c)^2$ [3]. This seems a reasonable assumption (in view of the results of e-p experiments at SLAC), since the form factor W_2 (q^2,ν), which is the

relevant form factor when we look for "anything" in the final state, is not suppressed very much in the region $0 < q^2 \lesssim 0.3$.

(b) Decay modes and lifetimes.

The principal decay modes of a heavy lepton are assumed always to have a neutrino associated with ℓ:

$$\begin{aligned} \ell &\to e + \nu_\ell + \bar{\nu}_e \\ &\to \mu + \nu_\ell + \nu_\mu \\ &\to \pi + \nu_\ell \\ &\to K + \nu_\ell \\ &\to \vdots \end{aligned}$$

The decay rate is

$$\Gamma_{\ell\to e\nu\bar{\nu}} \cong \Gamma_{\ell\to\mu\nu\bar{\nu}} = \frac{G^2 m_\ell^5}{192\pi^3} .$$

It is sufficient to add that the experiment is not set up to observe directly at ℓ but its decay product. It should be added that we do not look for the decay mode $\ell\to\mu(e) + \gamma$.

III. Experimental Arrangement.

a) Tagged photon beam.

A photon beam of 100-300 GeV could be obtained by adding the appropriate sweeping magnets, radiator, and slits, to a charged hadron beam produced by 400-500 GeV protons. Such a beam has been proposed by F. Sculli at the 1970 NAL Summer Study.[4] A 40-100 GeV photon beam of a similar design has been studied for use in Experimental Area #2, which is restricted to 200 GeV/c protons and is not, therefore, a

particularly suitable location for this experiment.

In the modified very-high-energy beam, we estimate an e^+ (or e^-) intensity of about 3.10^7 e/pulse at 200 GeV/c electron energy and $\frac{\Delta P}{P} = 2\%$, using 10^{13} interacting 400-GeV primary protons. With a radiator of about 0.1 radiation length thickness in the electron beam, and with a tagged photon energy bandwidth $\frac{\Delta k}{k}$ of about 30%, we estimate an intensity of about 10^6 tagged photons/pulse.

(b) Trigger

The experimental arrangement is shown in Fig. 1. The tagged-photon beam impinges on a beryllium target of thickness one radiation length. To one side of the photon beam (right hand side in Fig. 1), we place a charged particle detector and a neutron detector, in order to anti all known particles of $\gtrsim$ 1 BeV. Neutrinos and anti-neutrinos, being very weakly coupled particles, will escape detection. On the other side of the photon beam (see Fig. 1), there is a momentum-analyzing magnet with two sets of scintillation counter hodoscopes on either side of the magnet. This system measures the charged particle momenta and also demonstrates that there are only two particles to the left of the photon beam direction. Particle identification for $e^{\pm}$ is done by pulse height in Pb-glass counters, and muons and hadrons are separated with a hadron-filter anticoincidence veto. The momenta of the muon and the electron are measured to ±5% by the analysis magnet, which deflects a charged particle either upward or downward, depending

on the sign of its charge.

The complete event trigger consists of a tagged photon + anti (in the right hand side) + 2 charged particles in the left hand side. For the ℓ^+ and ℓ^- we expect the geometric detection efficiency to be $\sim 1/5$. For the W^+ and W^-, we expect the corresponding detection efficiency to be $\sim \frac{1}{5} \times B^2$,

$$\text{where } B = \left\{\frac{\text{Rate } (W\to\mu\nu) + \text{Rate } (W\to e\nu)}{\text{Rate } (W\to \text{all})}\right\}$$

i.e., the detection efficiency $\approx \frac{1}{5} \times \frac{1}{4} = 1/20$ for $B = \frac{1}{2}$.

(c) Event Rate Calculations.

For 10^6 photons per pulse and 10^6 pulses, we expect to detect the number of $\ell^+\ell^-$ events shown in Table III.

TABLE III.

	$m_\ell=1$	3	5	7	9
k=100 BeV	12,000	1,020	750	-	-
200	14,000	1,200	380	180	-
300	18,000	1,320	420	200	120

For W^+W^- production with no anomalous magnetic moment, we expect to detect the number of events shown in Table III, divided by 5 if the total lepton branching ratio for W-decays is 1/2, and then multiplied by some number slightly larger than 2 due to the spin of W.[5]

For a $W^\pm$ with an anomalous magnetic moment of $\kappa = 2, 1, -1, -2$, the event rate increases relative to the rate

for $\kappa = 0$, roughly by factors of 50, 7, 2.5, 20, respectively. The size of the anomalous magnetic moment can be measured by studying energy and angle distributions of e, and μ. If T violation is due to the electricdipole moment of a $W^{\pm}$, it will show in the term $\bar{k} \cdot (\bar{p}^{+} \times \bar{p}^{-})$.

(d) Rejection of Background Events.

Possible sources of background in this experiment include the following:

(i) High energy e^+e^- pair production. Most of these are not detected since $\theta_{min} \geq \frac{2m_\mu}{k}$ at all times. [θ_{min} is the minimum detection angle for e's and μ's].

(ii) Low energy e^+e^- pairs produced at fairly large angles. The low-energy e^+ and e^- are swept away by the analysis magnet.

(iii) In the detection of lower mass $\ell^+\ell^-$ pairs, we will run at lower intensity to reduce accidental problems.

(e) Costs and Schedule

The equipment needed for this experiment is the same as that required for NAL Proposal #70, so that if Proposal #70 is approved, then no additional equipment will be requested by this experimental group.

This experiment will be ready to run upon completion of NAL #70, provided that a 100-300 GeV tagged-photon beam is available at NAL by that time.

IV. Concluding Remarks

In the immediate future, we plan to make more precise cross section calculations for $\ell^+\ell^-$ and W^+W^-. We also expect to calculate an angular and momentum distribution of decay products with a Monte Carlo computer program in order to calculate the event rates more precisely and to improve the

design details of the experiment, although no major changes in the design are anticipated.

We have previously noted that most of the authors of this proposal are also involved with the M_W = 10-25 GeV search experiment (NAL Proposal #70). It is our desire that the experiment proposed here be approved to run after the completion of that experiment (Proposal #70).

In summary, we believe that the experiment proposed here will settle the question of the existence of $\ell^{\pm}$ and $W^{\pm}$ for the mass range up to about 7 GeV/c^2. If W boson exists, and its mass is $\lesssim$ 7 GeV/c^2, then its anomalous magnetic moment will also be measured in this experiment.

We are very grateful to Prof. Y. S. Tsai for many enlightening discussions.

References

1) See, for example, Search for Heavy Leptons, C. Heusch and J. Sandweiss, 1969 Summer Study, Vol. 4, p. 111. See, for example, Study of Lepton Pairs from Proton-Nuclear Interactions, Search for Intermediate Bosons and Lee-Wick Structure, W. Lee, L. Lederman, J. Appel, M. Tannenbaum, L. Read, J. Sculli, T. Yamanouchi and T. White, NAL Proposal 70.

2) Y. S. Tsai = SLAC Users Handbook P. D-3-41. The inter-nucleon distance of a heavy nucleus is d=1.2 fermi - 6 GeV^{-1}. From Table II, we see that $q^2_{min}d^2$ is small compared with unity when $m_\ell < 5$ GeV, hence coherent production of $m_\ell < 5$ GeV is not negligible and Eq. (1) tends to underestimate the cross section. When q^2_{min} approaches the mass of the proton, Eq. (1) is not applicable because it ignores the proton recoil, magnetic moment of the nucleon and inelastic excitation of nucleons. All of these effects can be taken into account in terms of two form factors in the reaction e + nucleus → e + anything. The reaction cross sections for γ^+ nucleus → $W^+ + W^-$ + anything were studied by S. M. Berman and Y. S. Tsai, Phys. Rev. Letters 11, 483 (1963). The energy-angle distribution of heavy leptons from γ^+ nucleus → $\ell^+ + \ell^-$ + anything was calculated by Y. S. Tsai and Van Whitis and the results of the calculation have been checked experimentally by Perl et al., for photoproduction of $\mu^\pm$ (see Phys. Rev. Letters 18, 360 (1967)).

The computer programs for these calculations are available at SLAC computation-group library. The reason why we use Eq. (1) instead of these more elaborate calculations is that we believe Eq. (1) is quite adequate for estimating approximate experimental rates if we make an intelligent estimate of the effects of the nucleon form factors.

3) Eq. (1) was obtained by integration of one of the leptons in the Bethe Heitler cross section for a lepton pair production. For the unscreened version of the Bethe-Heitler cross section, the target is assumed to be <u>an infinitely-heavy point charge.</u> When the momentum transfer is so large that the nucleon form factors become substantially less than unity, the target nucleon tends to break up, and the results of the SLAC inelastic electron scatterings must be used. The experimental results can be written as

$$\frac{d\sigma}{d\Omega dE'} = \left.\frac{d\sigma}{d\Omega}\right)_{\text{Mott}} \cdot \left[W_2(q^2,\nu) + 2\, W_1(q^2,\nu) \cdot \tan^2 \frac{\theta}{2}\right]$$

where $\left.\frac{d\sigma}{\Omega}\right)_{\text{Mott}} = \dfrac{\alpha^2 \cos^2 \frac{\theta}{2}}{4E^2 \sin^4 \frac{\theta}{2}}$ is the Mott cross section.

The above expression represents the scattering of a spin $\frac{1}{2}$ particle from <u>an infinitely-heavy point charge,</u> with $W_2(q^2,\nu) \cong 0.3/\nu(\text{GeV})^{-1}$ experimentally. The SLAC experiment also shows that $\sigma_\ell/\sigma_t \sim 0$, hence $W_1/W_2 \cong (-q^2 + \nu^2)/(-q^2)$. These experimental results are true only when $\nu^2 >> -q^2$, thus in general, W_1 is much larger than W_2. Nevertheless, in order to be conservative, let us ignore W_1 and integrate both

sides of the above equation with respect to ν. We obtain

$$\int \frac{d\sigma}{d\Omega dE'} dE' = \left.\frac{d\sigma}{d\Omega}\right)_{Mott} \cdot \frac{0.3}{-q^2} \ln \frac{\nu_{max}}{\nu_{min}}$$

Ignoring the logarithmic factor, we conclude that the suppression for large t events cannot be worse than 0.3/(-t), which is not very severe.

The other suppression factor comes from phase space. Let us denote the kinematics of $\gamma+P \to W^+ + W^-$ + "anything" by

M_1 = invariant mass of $W^+ + W^-$,

M_2 = invariant mass of "anything",

S = total $\gamma+P$ center of mass energy squared.

then the phase space suppression factor is

$$I = [1 - 2\ (M_1^2 + M_2^2)\ S^{-1} + (M_1^2 - M_2^2)^2\ S^{-2}]^{1/2}$$

The results of this suppression factor are again very small.

4) A high energy Electron Beam at NAL is studied by Morrison and is reported in Summer Study Report 1970 (SS-171) by F. Sciulli. We like to thank Drs.Morrison and Sciulli for making their work available to us.

5) Private communication, Y. S. Tsai.

FIG 1

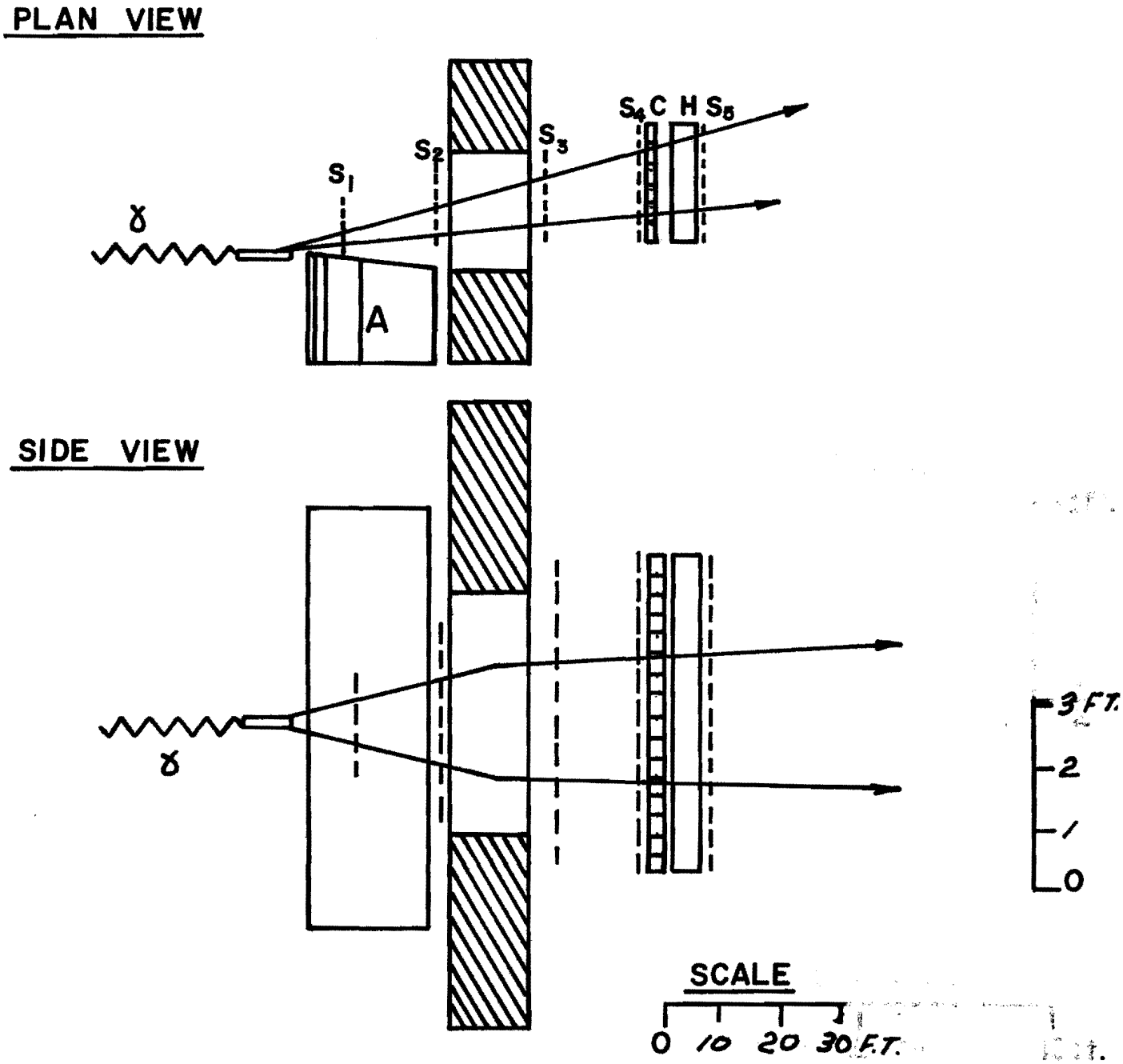

S_1, S_2, S_3, S_4	;	SCINTILLATION DETECTOR HODOSCOPE
C	;	PB GLASS DETECTOR
HS_5	;	HADRON ANTI
A	;	SCINTILLATION DETECTOR, PB GLASS--ANTI

Fig. 1. Plan view and side view of apparatus for this experiment.

An Addendum To

PROPOSAL TO SEARCH FOR HEAVY LEPTONS AND INTERMEDIATE BOSONS FROM PHOTON-NUCLEON AND PHOTON-NUCLEI COLLISIONS

(NAL Proposal No. 87)

W. Lee - Columbia University

M. Tannenbaum - Harvard University

D. Yount - University of Hawaii

A. Wattenberg - University of Illinois
T. O'Halloran
M. Gormley

L. Read - National Accelerator Laboratory

February 25, 1971 Correspondent: W. Lee

I. INTRODUCTION

We propose here an experiment using a 0°, high-energy, high-intensity photon beam to:

(i) measure the cross section for rho-meson photoproduction with 20-200 GeV photons,

(ii) explore the mass range from 1-10 GeV for the presence of $J^P = 1^-$ states,

(iii) determine the existence or non-existence of particles, such as the so-called "heavy lepton" and intermediate-vector-boson, in the 1-10 GeV mass range. If the intermediate-vector-boson exists in this mass range, we will determine its anomolous magnetic moment from the production cross section.

There are primarily two properties of the photon which make it inherently attractive to us. First, the coupling of the photon to charged leptons is well-known. The pair-production cross section has been tested to very small distances. A knowledge of the energy spectrum of a photon beam allows one to calculate the absolute rate and the angular distribution for the production of charged pairs of any mass. The reliability of these calculations will allow us to determine whether or not particles, such as the so-called "heavy lepton," exist in the mass range 1-10 GeV. To our knowledge, the use of a photon beam to determine the existence or non-existence of such particles in this mass range is unique.

The second property of the photon which we intend to exploit is: the photon is coupled to the $J^P = 1^-$ family of particles. The role of the 1^- states has been crucial to the understanding of the strong, electromagnetic and weak interactions. The use of a high-energy photon beam provides

a very natural mechanism for the diffractive production of such states, and will allow us to explore the mass region up to 10 GeV.

We have compared the advantages and disadvantages of carrying out this experimental program in a 0° neutral beam with those in a tagged-photon beam. Because the pair-production cross section varies inversely as the square of the particle mass, the increased intensity available in the 0° neutral beam extends the mass range over which a practical rate can be obtained. The most suitable location for this program would be in a 0° neutral beam in the proposed "Proton Laboratory". We request and recommend that such a beam be incorporated into the planning of the "Proton Laboratory" at the earliest possible stage.

II. THEORY

(1) Pair Production

The features of pair production relevant to this experiment are discussed in our proposal (NAL Proposal #87); we briefly summarize them here. We produce a charged-particle pair (λ^+, λ^-) via the interaction

$$\gamma + N \rightarrow \lambda^+ + \lambda^- + N \quad .$$

Table I of our original proposal gives the total cross section for various incident beam energies and various masses of $\lambda^\pm$ (m_λ). The $\lambda^\pm$ are expected to be short-lived ($\tau < 10^{-11}$ sec) with significant decay modes both leptonically and semi-leptonically. Among the channels detected in this experiment are

$$\lambda^\pm \rightarrow \pi^\pm + m\nu \qquad m = 1, 3, .$$
$$\left.\begin{array}{l} \mu^\pm + m\nu \\ e^\pm + m\nu \end{array}\right\} \quad m = 2, 4, .$$

To observe the $\lambda^{\pm}$ we will measure the transverse-momentum spectrum of e, μ or π pairs, or combinations thereof. In Figure 1 we display the transverse-momentum spectrum of the e, μ and π in the laboratory for the decay of a m_{λ} = 5-GeV particle via single-neutrino emission (or any two-body decay). We point out that the pronounced peak and sharp cutoff at $m_{\lambda}/2$ of the transverse-momentum spectrum depends upon the mass of the parent particle <u>but is independent of the energy of the incident photon</u>. Consequently, the use of a momochromatic photon beam is not essential for detecting such particles. The width of the peak in the transverse-momentum spectrum will be broadened due to the distribution of finite transverse momenta with which the $\lambda^{\pm}$ are produced. In our experiment this effect does not make a significant contribution to the width.

We have also calculated the transverse-momentum spectrum of the e or μ in the three-body leptonic decay

$$\lambda \rightarrow \binom{\mu}{e} + \nu + \nu$$

If the matrix element for this decay follows the conventional V - A theory, then the transverse-momentum spectrum of the final-state lepton possesses a sharp cutoff at $m_{\lambda}/2$. Consequently, the cutoff of the transverse-momentum spectrum of the decay particle is the same for both the two-body and three-body decay modes, although the actual distributions are different.

Obvious candidates for $\lambda^{\pm}$ which would be detected in this experiment are the so-called "heavy lepton" and the intermediate-vector-boson ($W^{\pm}$). The rate for W-production and our ability to measure the anomalous magnetic moment of the W, if it exists, are discussed in our original proposal.

(2) Production of 1^- States

To simplify the discussion, we consider only 1^- states which would be detected by their two-pion decay mode. We point out, however, that our equipment is also sensitive to other decay modes (e.g., $e^+e^-, \mu^+\mu^-$). States with masses in the 1-10 GeV range, hereafter called ρ', which decay into two pions would be observed in our data in a simple and straight-forward manner. Resonance structure in the dipion mass spectrum would be expected. Events in the resonance region which are produced diffractively would be tested for consistency with $J^P = 1^-$ by examining the decay angular distribution. We note that a knowledge of the incident-photon energy is not required to perform these tests. Consequently, a tagged-photon beam is not essential for this part of the experiment.

III. EXPERIMENTAL ARRANGEMENT

(1) Neutral Beam

We request that NAL incorporate a 0° neutral beam in the proposed "Proton Laboratory." A possible beam configuration is shown in Figure 2. Although Figure 2 illustrates a rather specific neutral beam, we emphasize that essentially all of the beam parameters are negotiable except for the very small beam angle.

The proposed beam is approximately 300 feet long. The proton target is followed by two NAL main-ring magnets which sweep the primary protons and other positively-charged particles into a beam dump; negative particles are deflected into the magnet iron. To attenuate neutrons, a small-diameter ($<$ 2 inches) transfer tube approximately 100 feet long is placed in the neutral beam downstream from the beam dump. The transfer tube contains liquid D_2, which has the highest available ratio of interaction to radiation length.

To permit collimator installation, the transfer tube is constructed in several sections and is located in the gaps of standard NAL main-ring magnets operating at modest fields.

The photon beam itself is defined by the proton beam spot ($\sim$2 mm diameter) and by the beam-defining collimator (C1 = 4 mm) just downstream of the two sweeping magnets. Additional collimators (C2 = 25 mm, C3 = 35 mm and C4 = 50 mm) are used to "scrape off" the photon-beam halo and do not intercept the beam envelope defined by the proton beam spot and the beam-defining collimator. The neutron flux will be attenuated by 10^{-4} in this setup, while the photon beam intensity is reduced by about 3×10^{-2}. Except for the use of neutron attenuators, this photon beam geometry is quite similar to that used with the SLAC 2.2-m streamer chamber.

Figure 3 shows the energy spectrum after the attenuation by D_2 of the neutron and photon fluxes (calculated from Hagedorn-Ranft) per 10^{13} interacting protons. In calculating these fluxes, we have assumed that the π^0 production cross section is half the sum of the π^+ and π^- cross sections and that all photons originate from π^0 decay. The neutron yield at 0° is conservatively assumed to be equal to the calculated proton yield. The high-energy yields for the neutral beam shown in Figure 3 are approximately 1000 times larger than those expected for a tagged-photon beam (c.f. NAL Proposal #87). In Figure 3, we also compare the shape of the photon spectrum in the 0° neutral beam with that of a 200-GeV bremsstrahlung beam. We note the remarkable similarity of the two spectra.

(2) Experimental Detectors and Trigger

The arrangement of the experimental detectors is

shown in Figure 4. The photon beam impinges on a 0.1-radiation-length beryllium target placed 10 feet upstream from the entrance of a vertical bending magnet with a gap 3ft X 14ft X 1.5ft and a field of 15 KG. The detection system consists of three proportional-chamber hodoscopes (H1,H2,H3) and two particle-identification systems(PID) for separating electrons, muons and hadrons.

The three hodoscopes are located 9 ft (H1), 25 ft (H2) and 50 ft (H3) from the target and contain both vertical and horizontal wires. The momenta of charged particles are determined from the vertical position measurements of the three hodoscopes. The wire spacing is 3 mm, corresponding to a momentum resolution at 40 GeV/c of $\pm 2\%$. The horizontal hodoscopes measure the projected production angle. Scintillation counters could also be used in this application.

The particle-identification system shown in Figure 5 consists of a 40-radiation-length lead-lucite shower counter followed by scintillation counters sandwiched between 24 collision lengths of iron. For an electron the energy resolution of the shower counter is expected to be

$$\Delta E = \pm 5\% \left[\frac{10\,(GeV)}{E\,(GeV)} \right]^{1/2}$$

The separation of π, μ and e should be reliable to 99% or better.

The trigger consists of a six-fold coincidence produced by two charged particles, both having very large transverse momentum. Independent measurements of the momentum and energy of final-state electrons provide a high degree of redundancy. In addition, all reconstructed events are required to originate at a vertex within the target.

IV. RATES AND BACKGROUNDS

(1) Detection Rates for $\lambda^{\pm}$

The detection rates for various $\lambda^{\pm}$ masses given in our proposal (NAL Proposal #87) need to be revised due to: (1) the increased photon fluxes available in the 0° neutral beam and (2) the more stringent requirements of the detection system, e.g., longitudinal momentum $\geq$ 30 GeV/c. The event rates for various particle masses are shown in Table I for 10^6 pulses

Table I

m_λ (GeV)	Number of Events
1	150,000
3	13,500
5	4,000
7	1,820 *
9	252 *

* In these cases the transverse momentum is so large that we can trigger on a single final-state particle.

(2) Detection Rates for Massive 1^- States

We know of no reliable way of estimating the production cross section by a diffractive mechanism for the reaction

$$\gamma + A \rightarrow A + \rho' \quad \hookrightarrow \pi^+ + \pi^-,\ e^+ + e^-,\ \mu^+ + \mu^-$$

Neither do we know how to estimate the $\pi^+\pi^-$ background.

Consequently, we have made no rate calculations for this process. We point out, however, that a measurement of this background is, in itself, of great interest even if the ρ' does not exist.

(3) Photon-Induced Backgrounds

The arrangement of our equipment discriminates strongly against the principal photon induced background, the production of large-angle electron-positron pairs. The calculated rate at which single electrons strike our detectors is less than 10^3 per pulse. These calculations intentionally overestimate the electron production rate because (1) the unscreened version of the Bethe-Heitler cross section has been used and (2) the form-factor suppression of the pair-production cross section at large momentum transfers has been underestimated. Even with these conservative assumptions, we anticipate no difficulties with photon-induced backgrounds.

(4) Neutron-Induced Backgrounds

The number of π^+, π^- and $\pi^0 \to 2\gamma$ produced by neutrons has been calculated using Hagedorn-Ranft, and the neutron flux shown in Figure 3. The total number of charged pions and photons striking our detectors from neutron-induced interactions is less than 10^4 per pulse. The K_2-induced background is less than the neutron-induced rate.

V. EXPERIMENTAL PROGRAM

(1) Measurement of Photon-Beam Spectrum and Intensity

The beam monitors to be used in measuring the photon

flux and in determining the photon energy spectrum are shown schematically in Figure 6a. The primary monitor is an ionization quantameter filled with hydrogen gas at 1 atm and calibrated to $\pm$ 0.3% at energies below 20 GeV. We anticipate that the quantameter output will be linear in energy to about this accuracy over the full energy range of the high-intensity beam; we note, however, that roughly half the energy in this beam is carried by photons of less than 50 GeV so that, in practice, the extrapolation of the 20-GeV calibration is not extreme. The approximate intensity range for precise monitoring is shown in Figure 6b and covers nine decades, exceeding the maximum intensity expected, 3×10^{11} GeV / 10^{13} interacting protons, by about two orders of magnitude.

As reference monitors, we plan to use two ion chambers (probably two ion chambers in the same gas container with Argon-CO_2 filling at 1 atm), a scintillation counter, and a Cerenkov counter consisting of 1 meter SF_6 at 1 atm pressure. The ion chambers and scintillator are sensitive to electrons and positrons of quite low energy, while the Cerenkov monitor detects electrons and positrons above 12 MeV. The practical operating intensities for these devices, assuming they detect pairs from 0.01 radiation lengths of material in the beam line, are also shown in Figure 6b: together they extend over the full range of beam intensities expected.

The ion chambers will be quite thin ($\sim$ 0.001 radiation length), and they will be located upstream of the target. The Cerenkov counter is somewhat thicker ($\sim$ 0.02 radiation length) and probably will be located downstream of the target. The scintillation counter will probably follow the Cerenkov counter as indicated in the figure. The gain of the Cerenkov monitor in this location will, of course, change dramatically when the 0.1-radiation-length target is put into the beam. If thicker targets are used, the scintillation counter and Cerenkov monitor will be installed upstream.

The 40-radiation length quantameter is beam-destructive and must be located downstream of the target: its gain will change by about 10% when a 0.1-radiation-length target is put in, assuming the magnetic field of the pair spectrometer sweeps out the charged particles. This effect can easily be measured using the ion chambers as reference monitors.

It is important to note that the total energy carried by the neutrons is about 6% of the photon energy. We estimate that less than 10% of the neutron energy will be absorbed in the lead-plate quantameter (1.6 collision lengths) on the average so that neutrons will change the quantameter response by less than 1%.

After the reference monitors have been calibrated, a shower counter will be driven into the beam just in front of the quantameter. With the spectrometer magnet off, the pulse-height distribution in the shower counter will be recorded using the reference monitors for normalization. Two scintillators (A_1 and A_2 in Figure 6a), separated by 2 cm of lead will be used to veto neutron interactions occurring in the shower counter. The total thickness of shower counter plus quantameter is 80 radiation length of lead = 3.4 collision lengths. Any electromagnetic radiation penetrating this thickness will be of too low an energy to produce a veto coincidence in $A_1 - A_2$. At the same time, neutrons which interact in the shower counter will produce highly penetrating hadrons which veto these events with an efficiency close to 100%.

The practical operating intensity for a typical shower counter is shown in Figure 6b, and it overlaps both the relative and the absolute monitor ranges by at least two decades. A convenient operating range to be used in determining the photon spectrum is $10^8 - 10^9$ GeV/sec, which

extends within 1/30 of the full intensity. Since the ion chambers, scintillation counter and Cerenkov monitor detect mainly low-energy photons, while the quantameter is sensitive mainly to photons in the multi-GeV range, the ratios of the reference and absolute monitor outputs will test whether the spectrum has changed in going to full intensity.

It is worth noting that all of the beam monitors described here are widely used in monitoring photon beams at other laboratories. Other monitors, such as calorimeters and secondary emission quantameters could supplement those selected. We should note further that the determination of the photon spectrum is limited only by the resolution of the shower counter and can easily be carried out to ±2% or better depending upon the type of shower counter selected, lead-scintillator, lead-glass, etc. Such measurements are of considerable interest as a fundamental beam survey upon which tagged-photon beams and various photon experiments can be based.

(2) Measurement of the Differential Cross Section for the Reaction $\gamma + A \rightarrow \rho + A$ for Photon Energies of 20 to 200 GeV

We will measure the differential cross section $\frac{d\sigma(k,t,A)}{d\Omega}$ of the reaction $\gamma + A \rightarrow \rho + A$ proceeding by a diffractive mechanism where A is the atomic number of the target nucleus, k the incident photon energy and t the square of the momentum transfer. The resolution in the measurement of the pion momenta is ± 2% at 40 GeV/c, and the angular resolution is $\pm 2 \times 10^{-4}$ radians. Pions are identified as described in Section III. The resolution of t is ± 0.003 at t = 0.1, and the mass of the rho is measured to ±10 MeV for pions with a momentum of 40 GeV/c.

To optimize the angular resolution for this phase of the experiment, we will use a target 2 mm X 2 mm X 0.1 radiation lengths and a photon intensity of 10^7 per pulse on target. We expect to observe 100 ρ's per pulse. In measuring this cross section we will span the dipion mass range from 500-900 MeV. Since the transverse-momentum of pions from rho decay is very small, we will move the trigger counters and hodoscopes for the differential-cross-section measurement so that they accept particles making a 10 mr angle with the beam line.

VI. EQUIPMENT AND RUNNING TIME

In Table II we have summarized the equipment and running time required to complete the various phases of this experiment.

Table II

Equipment Requirements and Costs

1. Analyzing Magnet This is a 200 KG-ft cold magnet with a 3ft X 14ft X 1.5ft gap. A similar magnet has been designed by Ron Fast for NAL Proposal #70.	$100K
2. Detectors	
a) Proportional Counters (Nevis,Ill.)	$50K
b) Scintillation Counters (Ill.)	$40K
c) Shower Counters (Ill.)	$30K
d) Standard Fast Logic (on-hand, NAL)	-
e) Monitoring Equipment (Ill.)	$10K
f) Interface (Nevis, Ill.)	$35K
g) Computer, SIGMA 2 (on-hand)	-
h) Precision Collimator (NAL,Ill.)	-
	$165K
TOTAL:	$265K

Running Procedures

Phase I. Debugging and the measurement of the photon intensity and its energy spectrum; Two months of low intensity (1/100 of full intensity) and a few days of full intensity, intermittantly.

Phase II. Approximately 10^5 pulses of low intensity (1/10 of full intensity) for the reaction $\gamma + A \rightarrow \rho + A$.

PhaseIII. Approximately 10^6 pulses of full intensity to look for massive objects ($\lambda^{\pm}$).

FIGURE 1.

TRANSVERSE-MOMENTUM SPECTRUM OF e, π, OR μ IN $\lambda^{\pm} \rightarrow \begin{pmatrix} e^{\pm} \\ \mu^{\pm} \\ \pi^{\pm} \end{pmatrix} + \nu$

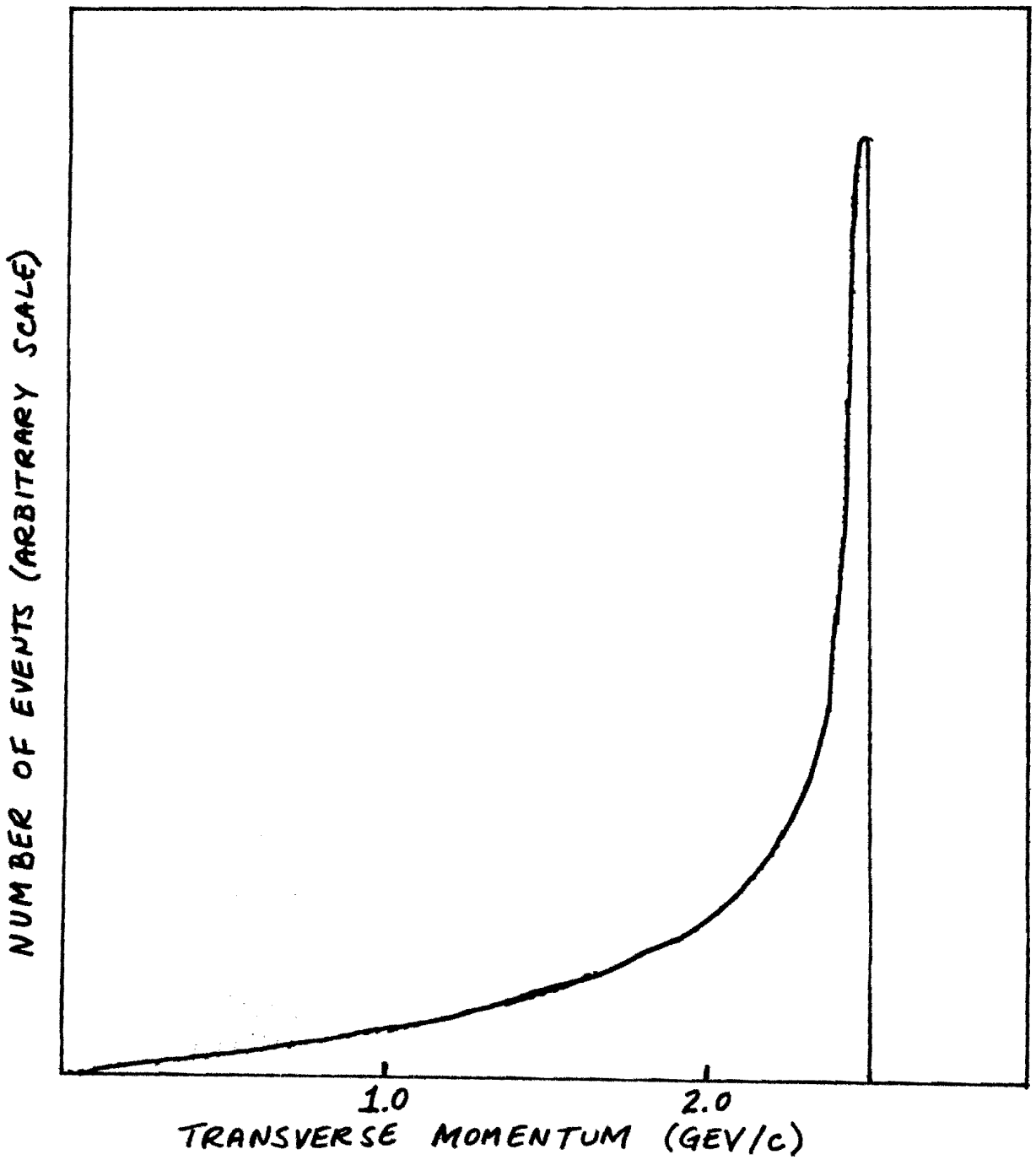

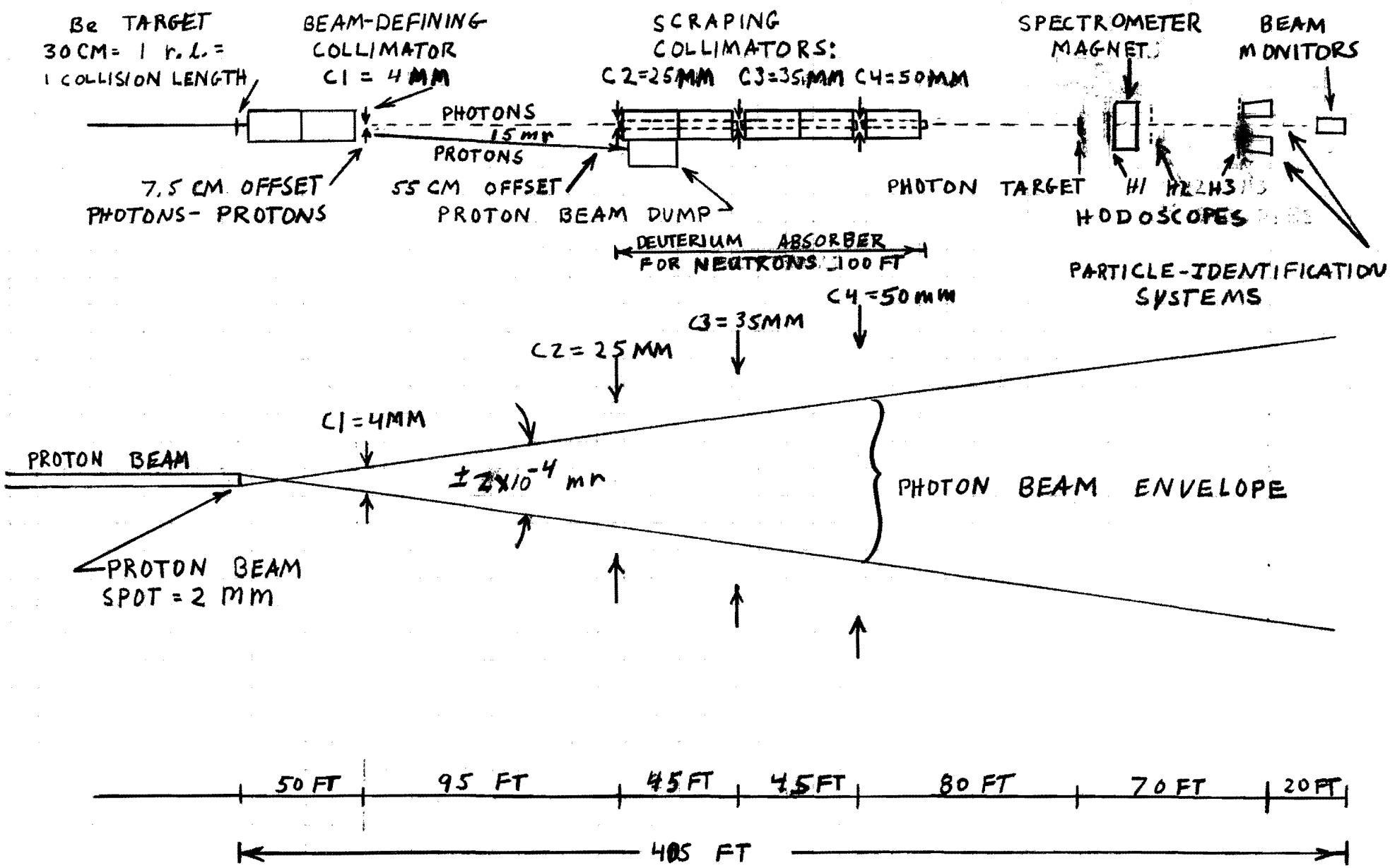
Be TARGET
30 CM = 1 r.l. =
1 COLLISION LENGTH
BEAM-DEFINING
COLLIMATOR
C1 = 4 MM
SCRAPING
COLLIMATORS:
C2=25MM C3=35MM C4=50MM
SPECTROMETER
MAGNET
BEAM
MONITORS
PHOTONS
15 mr
PROTONS
7.5 CM OFFSET
PHOTONS - PROTONS
55 CM OFFSET
PROTON BEAM DUMP
PHOTON TARGET
H1 H2 H3
HODOSCOPES
DEUTERIUM ABSORBER
FOR NEUTRONS 100 FT
PARTICLE-IDENTIFICATION
SYSTEMS
C4 = 50 MM
C3 = 35MM
C2 = 25 MM
C1 = 4MM
PROTON BEAM
±2x10^-4 mr
PHOTON BEAM ENVELOPE
PROTON BEAM
SPOT = 2 MM
50 FT
95 FT
45 FT
45 FT
80 FT
70 FT
20 FT
405 FT

Fig. 2

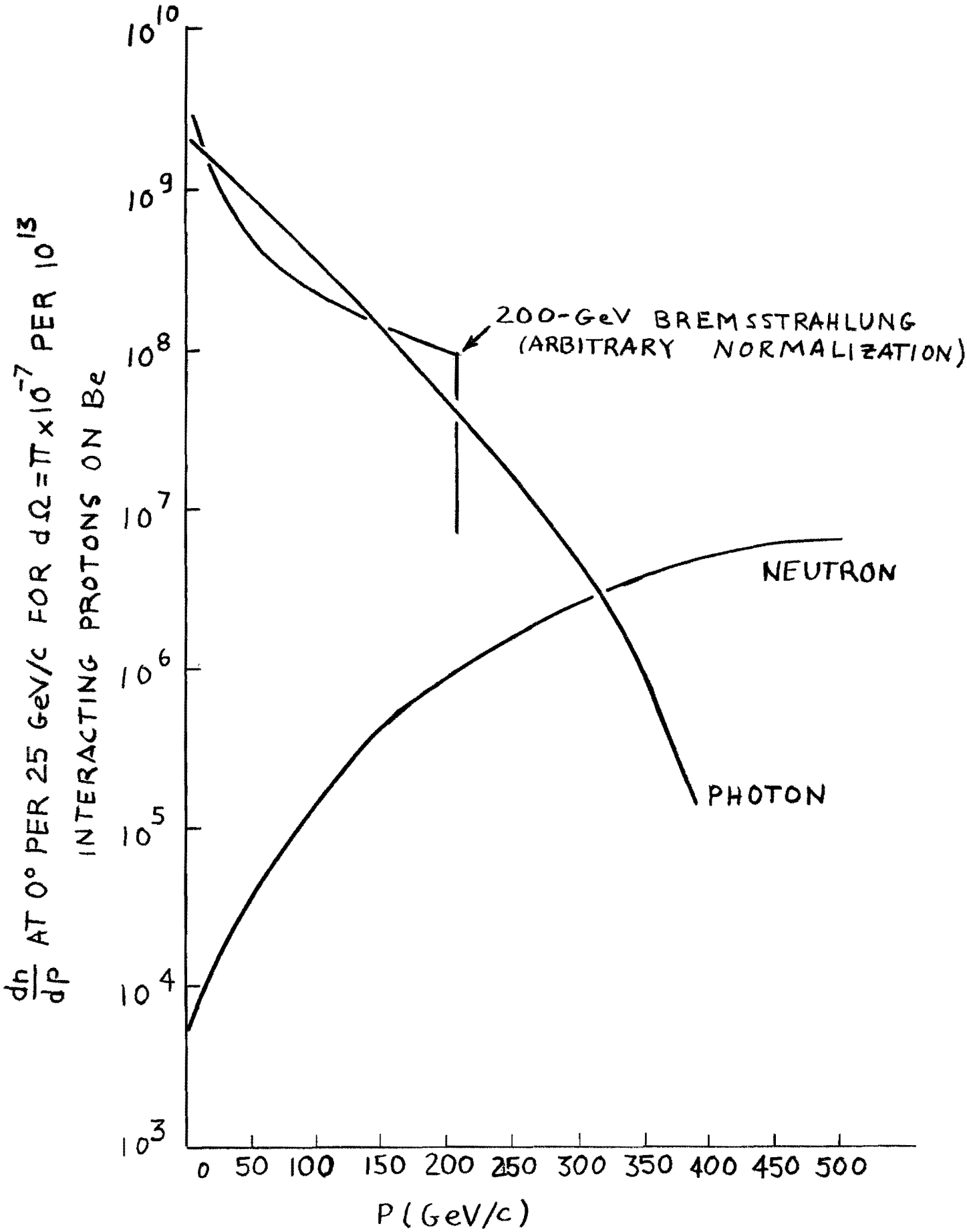
$\frac{dn}{dp}$ AT 0° PER 25 GeV/c FOR $d\Omega = \pi \times 10^{-7}$ PER 10^{13}
INTERACTING PROTONS ON Be
10^{10}
10^{9}
10^{8}
10^{7}
10^{6}
10^{5}
10^{4}
10^{3}
200-GeV BREMSSTRAHLUNG
(ARBITRARY NORMALIZATION)
NEUTRON
PHOTON
0 50 100 150 200 250 300 350 400 450 500
P (GeV/c)

Fig. 3

EXPERIMENTAL SETUP

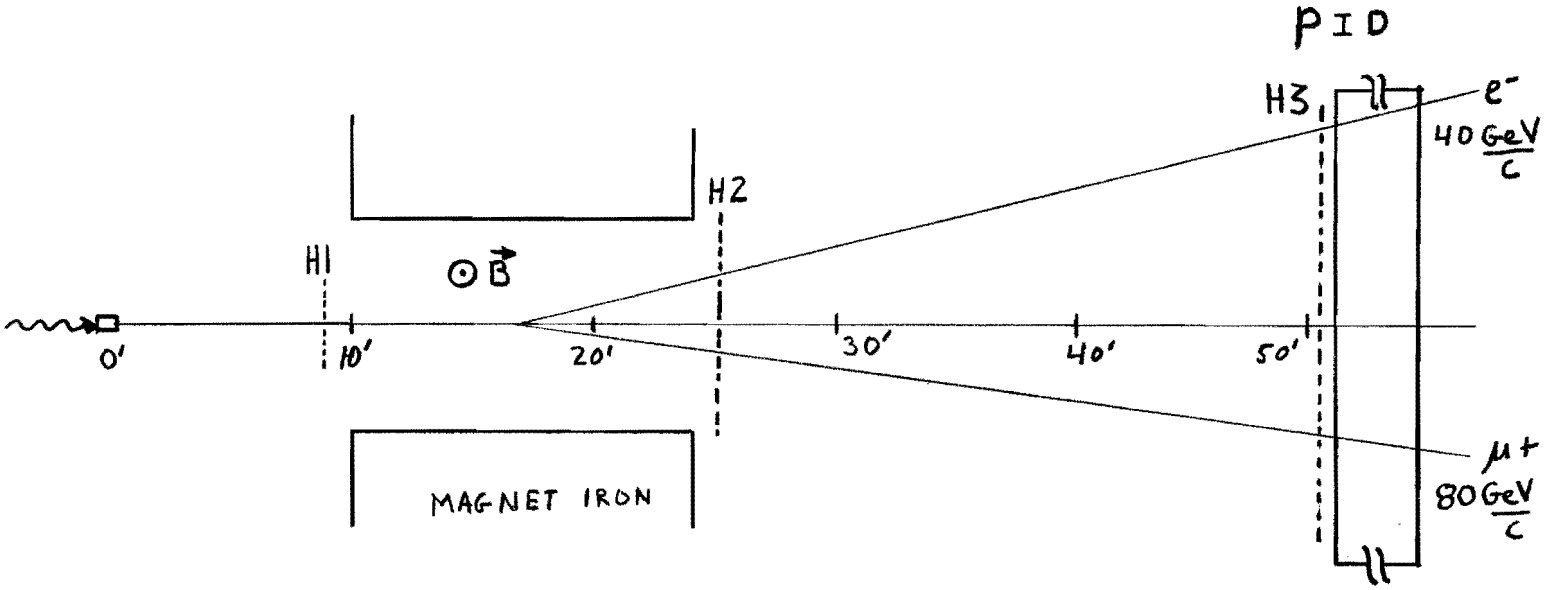

SIDE VIEW

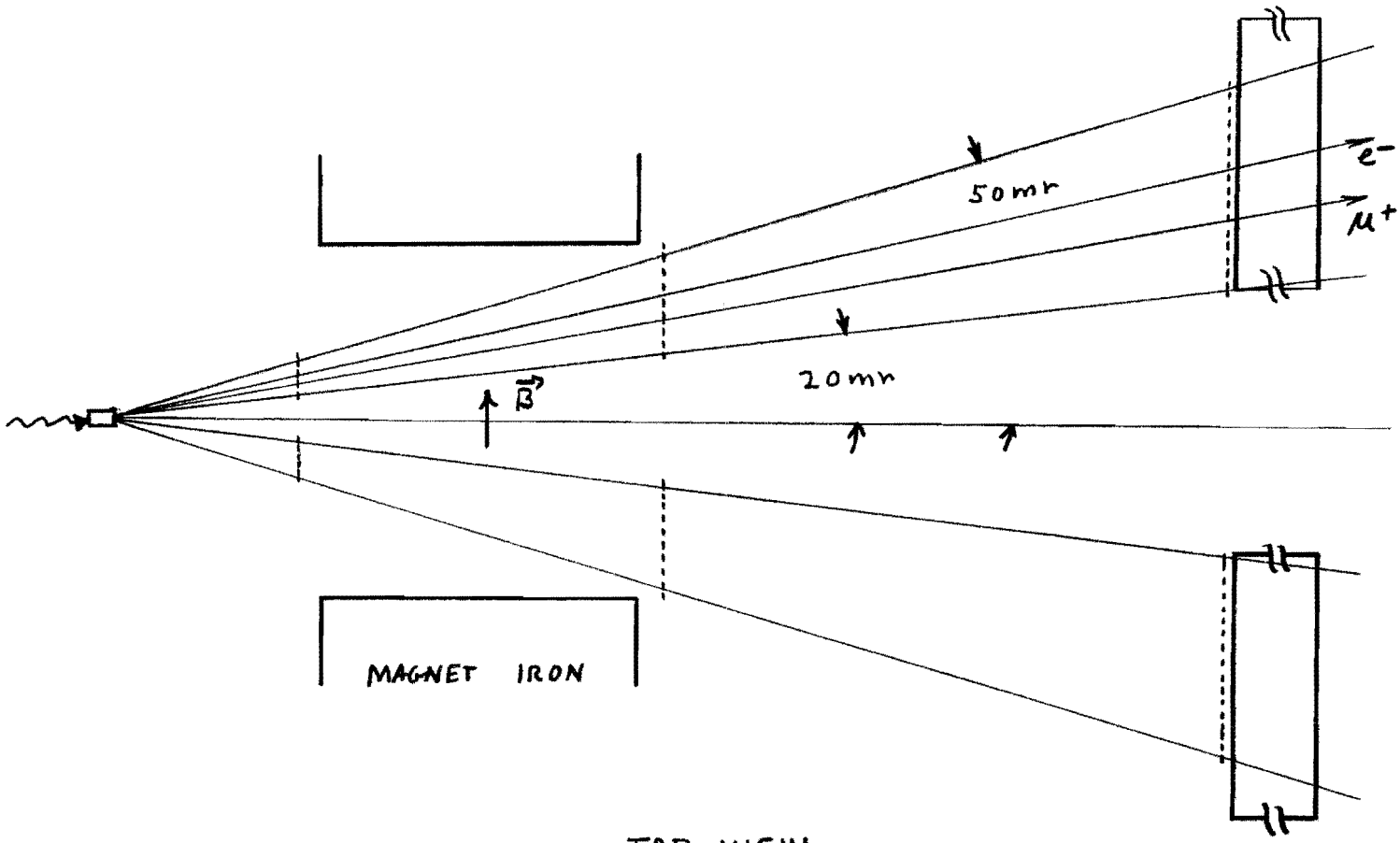

TOP VIEW

Fig. 4

Beam

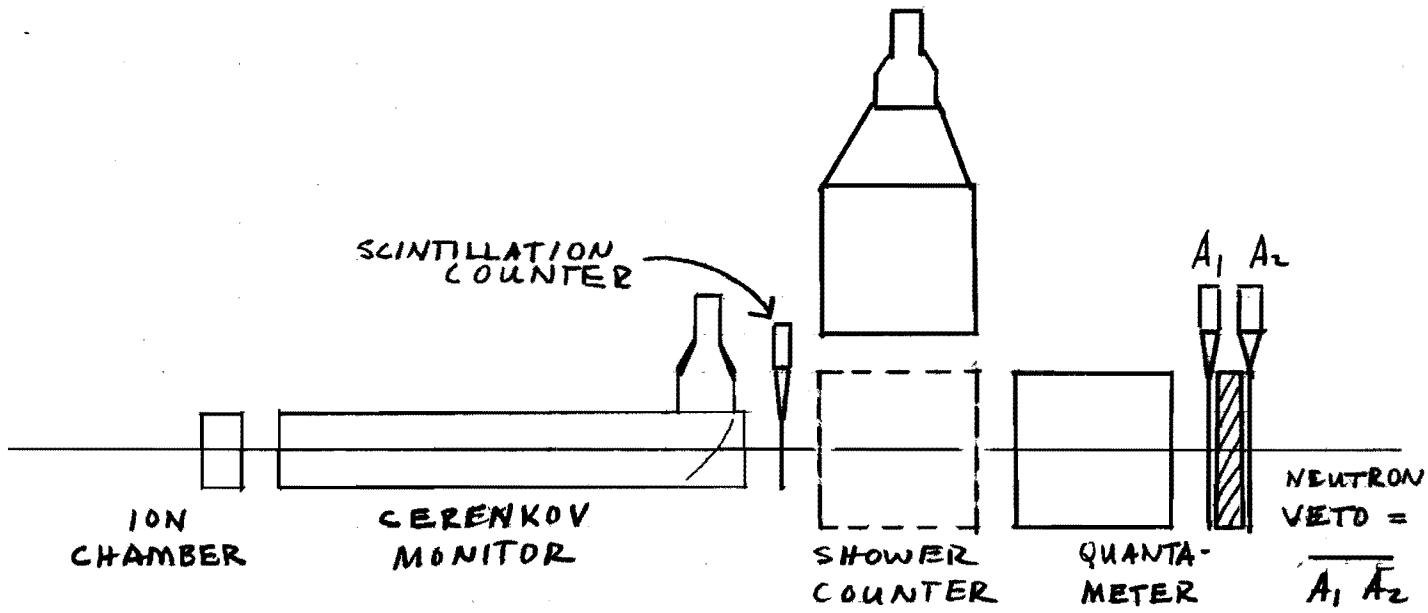

Fig. 6a

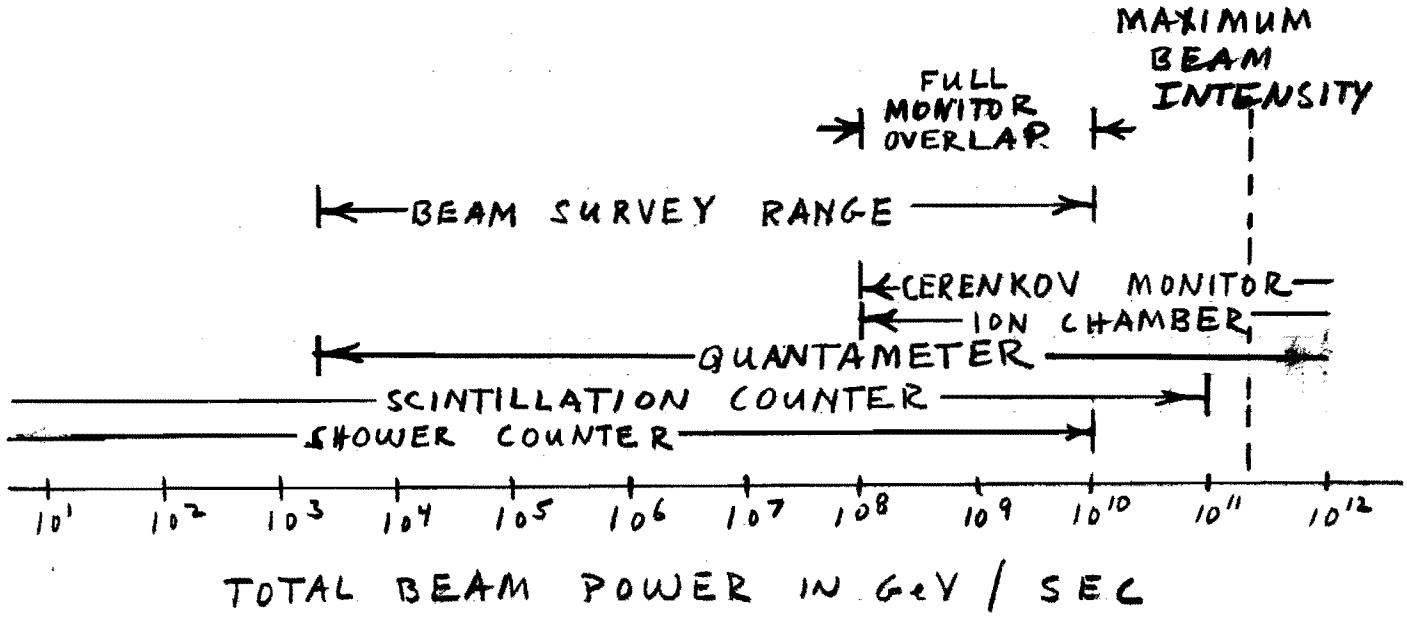

Fig. 6b

CASCADE PS C5811W PRINTED IN U. S. A.