NAL PROPOSAL No. 0061

Correspondent: O. Chamberlain
Lawrence Radiation Lab.
University of California
Berkeley, California 94720

FTS/Commercial 8-415-843-5464

A PROPOSAL TO MEASURE POLARIZATION IN pp, π^-p AND π^+p ELASTIC SCATTERING AT 50, 100, and 150 GeV/c AT THE NATIONAL ACCELERATOR LABORATORY

D. Hill, P. Koehler, T. B. Novey, A. Yokosawa, H. Spinka
Argonne National Laboratory

C. Brown, M. E. Law, C. Lichtenstein, F. Pipkin, J. Sanderson
Harvard University

O. Chamberlain, G. Shapiro, H. Steiner
Lawrence Radiation Laboratory

G. Burleson
Northwestern University

G. A. Rebka
University of Wyoming

R. Ehrlich, V. W. Hughes, D. C. Lu, S. Mori
P. A. Thompson, M. E. Zeller
Yale University

D. Eartly, K. Pretzl
National Accelerator Laboratory

June, 1970

May 1971, New Scientific Spokesman

NAL PROPOSAL No. 0061

Correspondent: T. Novey
Argonne National Lab
Argonne, Ill. 60439

FTS/Commercial 312-739-3189

A PROPOSAL TO MEASURE POLARIZATION IN pp, π^-p AND π^+p ELASTIC SCATTERING AT 50, 100, and 150 GeV/c AT THE NATIONAL ACCELERATOR LABORATORY

D. Hill, P. Koehler, T. B. Novey, A. Yokosawa, H. Spinka
Argonne National Laboratory

C. Brown, M. E. Law, C. Lichtenstein, F. Pipkin, J. Sanderson
Harvard University

O. Chamberlain, G. Shapiro, H. Steiner
Lawrence Radiation Laboratory

G. Burleson
Northwestern University

G. A. Rebka
University of Wyoming

R. Ehrlich, V. W. Hughes, D. C. Lu, S. Mori
P. A. Thompson, M. E. Zeller
Yale University

D. Eartly, K. Pretzl
National Accelerator Laboratory

June, 1970

A Proposal

To Measure

Polarization in pp, $\pi^- p$ and $\pi^+ p$ Elastic Scattering

at 50, 100, and 150 GeV/c

at the National Accelerator Laboratory

D. Hill, P. Koehler, T. B. Novey, A. Yokosawa, H. Spinka
Argonne National Laboratory

C. Brown, M. E. Law, C. Lichtenstein, F. Pipkin, J. Sanderson
Harvard University

O. Chamberlain, G. Shapiro, H. Steiner
Lawrence Radiation Laboratory
University of California, Berkeley

G. Burleson
Northwestern University

G. A. Rebka
University of Wyoming

R. Ehrlich, V. W. Hughes, D. C. Lu, S. Mori
P. A. Thompson, and M. E. Zeller
Yale University

D. Eartly and K. Pretzl
National Accelerator Laboratory

June, 1970

Correspondent: T. Novey

ABSTRACT

We propose to measure the polarization parameter in pp, $\pi^- p$, and $\pi^+ p$ scattering at incident momenta of 50, 100, and 150 GeV/c over the range $0.15 \leq -t \leq 1.5\ (\mathrm{GeV}/c)^2$. The apparatus consists of a polarized proton target, two spectrometer arms which determine the angles and momenta of both outgoing particles, and an on-line computer. The detectors are designed to operate at incident beam rates of up to 10^8 beam particles/pulse. We anticipate an error in the polarization parameter P of $.005 \leq \Delta P \leq .01$ over the range $.15 \leq -t \leq .8\ (\mathrm{GeV}/c)^2$ in 100 shifts of data taking and background studies.

I. INTRODUCTION

The aim of this experiment is an initial exploration of polarization effects in pp, $\pi^- p$, and $\pi^+ p$ and possibly also in $K^- p$, $K^+ p$ and $\bar{p}p$ elastic scattering. It will provide values for the polarization parameter P in the range $0.15 \leq -t \leq 1.5\ (\mathrm{GeV}/c)^2$ at incident momenta of 50, 100, and 150 GeV/c.

We will measure a fundamental parameter which is essential in understanding the elastic scattering of elementary particles in a new energy region. While cross section data provide information about the behavior of a dominant scattering amplitude, the study of polarization phenomena is better suited to observe interference between amplitudes which can differ greatly in magnitude. The high sensitivity of polarization phenomena to interference effects makes such measurements as a function of s and t important in imposing constraints on theoretical models.

In the energy range up to about 20 GeV/c both theoretical models and experimental results[1] indicate that the polarization parameter decreases with increasing energy ($P \sim s^{-1/2}$ for $-t \leq \sim 0.6\ (\mathrm{GeV}/c)^2$). If this behavior continues to NAL energies both theory and extrapolation of experimental results predict polarizations of a few percent. However, the recent $\pi^- p$ cross section results obtained at Serpukhov have cast doubt on the reliability of extrapolations from lower energy.

The zeros and maxima in the polarization parameter as a function of t have been found to be strongly correlated with structure in the corresponding differential cross section. For momentum transfers larger than $-t \sim 0.6\ (\mathrm{GeV}/c)^2$ current data indicate that the s-dependence of the differential cross

section is more complicated than the behavior at lower $|t|$ The polarization parameter also seems to deviate from the $1/\sqrt{s}$ behavior in this region. Our experiment will probe this high momentum transfer region to examine this behavior at higher energies.

Total cross sections for particle-proton and antiparticle-proton collisions seem to be approximately equal at high energies; this is in accord with the Pomeranchuk Theorem. What about the corresponding polarizations? Experiments for momenta up to 14 GeV/c[2] have shown that $P(\pi^+p) \cong -P(\pi^-p)$ in the region $0 \leq -t \leq 1.5\ (\mathrm{GeV}/c)^2$. On the other hand, neither K^+p, K^-p, nor pp, $\bar{p}p$ scattering exhibit such a trend; in fact, these polarizations tend to have the same sign. We will determine whether these trends persist at high energies.

The emphasis of the experiment will be on pp, π^-p, and π^+p scattering. The pp measurements have the advantage of being easiest from the experimental point of view, whereas the πp system has some theoretical advantages in that only two amplitudes are needed for a given I-spin state, as opposed to five for the pp system. Because of the possibility that the polarization parameter could be very small over much of the high energy region to be surveyed, we must strive for a high degree of accuracy. Where the polarization is small, we expect to be able to reduce our statistical and systematic errors on the polarization to 0.005 for a limited number of points.

We plan to run at incident momenta of 50, 100, and 150 GeV/c. It is also desirable to reproduce at least one existing set of data points at lower beam momentum with our apparatus. If good Serpukhov data exist by that time, we may not have to go to much lower momentum to do this. Otherwise, we would want to overlap CERN data at one point.

It seems likely that a high degree of compatibility can be achieved between the experimental set-ups needed for this experiment and the corresponding differential cross section measurements. The two experiments have much in common. With the exception of the polarized target, practically all of the other experimental equipment and data handling systems could be identical. Significant savings in time, effort, and money could be achieved by suitable coordination of these experiments. Our group is prepared to cooperate fully with a differential cross section group to maximize the compatibility of these experiments.

II. EXPERIMENTAL ARRANGEMENT

A. Introduction

The polarization parameter P at a given value of s and t is determined by measuring the asymmetry

$$\varepsilon = \frac{N^+ - N^-}{N^+ + N^-} = P \cdot P_T$$

where $N^+(N^-)$ is the number of events, normalized to the amount of beam incident on the target, scattered elastically into a given solid angle for the target polarization aligned with (against) the normal to the scattering plane. Hydrocarbon targets with proton polarizations $P_T = 0.70$ are now available. Systematic errors can be kept small because the sign of the target polarization can be reversed easily without affecting the geometry or detection efficiency of the apparatus. (Only a slight change in the frequency of the microwaves producing the polarization is required.) Unlike cross section experiments, neither the beam flux nor the detection efficiency need be known absolutely; they only have to be monitored for constancy.

Since the target material contains many nuclei other than hydrogen, the bulk of the scattering is either quasi-elastic from the bound nucleons or inelastic with three or more particles in the final state. The apparatus must thus be capable of distinguishing between elastic events and the quasi-elastic and inelastic backgrounds.

The apparatus was designed to make full use of the expected high beam intensities at NAL. To maximize the constraints on elastic events our detection apparatus consists of two spectrometer systems which determine the direction and momentum of the scattered and the recoil particle. Good angular and momentum resolution as well as high counting rate capability are achieved by the use of proportional (Charpak) wire chambers in both arms. The arrangement and size of the spectrometers is dictated by the laboratory kinematics of high energy elastic scattering: over the entire range $0.15 \leq -t \leq 1.5$ $(\mathrm{GeV}/c)^2$ the projectile scatters $< 2.5^\circ$ from the beam direction and has essentially the same momentum as the beam; the target proton recoils at angles between 80° and 55° with momentum between 0.40 and 1.50 GeV/c. The high beam rates prevent us from installing any counters in the direct beam to identify the incident particle or to determine its trajectory. Two Cerenkov counters in the forward arm identify the detected particle as a π, K, or proton. This permits simultaneous acquisition of data for all three reactions. The recoil arm identifies the detected particle as a proton by time-of-flight.

On the basis of present evidence we expect the elastic differential cross sections to decrease exponentially with t at high energy. Thus we do not anticipate obtaining polarization data of sufficient statistical accuracy for $-t > 1.5$ $(\mathrm{GeV}/c)^2$. The large variation of elastic cross section over this momentum

transfer range necessitates separating the measurements into two or more t regions. At small $|t|$ the cross sections are large enough to permit high statistical accuracy while running at reduced beam rates and thus minimizing backgrounds. For the large $|t|$ region we require beam rates of as great as 10^8 particles per machine burst.

The data will go to an on-line computer which will record the events on tape and carry out some analysis to let us monitor the progress of the experiment. Since the total number of anticipated events is large, the on-line computer may also have to eliminate some bad events before recording the remaining ones. Some portion of this function could probably be more easily carried out with a larger computer, either on line to ours on a time-sharing basis, or off line but readily accessible. We expect our data reduction procedure to be such that good, but not final, polarization values will be available during the run.

B. Beam and Beam Monitoring

We require a high energy, high intensity secondary particle beam capable of going up to 150 GeV/c for both polarities. We expect to be able to utilize beam intensities of up to 10^8 particles per pulse. For positive particles we expect to work with up to 10^8 protons, 10^6 π^+ and 10^5 K^+ per pulse at 150 GeV/c. We would like the π^- and K^- intensities at the highest momentum to be 10^7 and 10^6 particles per pulse, respectively. The shielding of the beam should be adequate to protect our equipment from excessive background.

Since our apparatus does not measure incident beam particle trajectories we request an incident beam parallel to $\pm$ 0.2 mrad horizontally and vertically for a momentum bite between 0.2% and 1%. We can accept a beam spot size

at the polarized target of approximately 2 cm. diameter. With these beam conditions our spectrometers are most efficient in selecting elastic events.

The beam flux will be measured with a sensitive ion chamber; the location and profile of the beam near the polarized target will be monitored. Counter telescopes detecting secondary particles from the target will provide a check on the targeting conditions and monitor the beam flux. If necessary, electron contamination can be eliminated by use of a thin converter in the beam (at the momentum slit) and/or an electron veto Cerenkov counter in the beam before the target.

C. Polarized Proton Target

The target that we plan to use will be of the hydrocarbon type (either butanol or ethylene glycol) with approximate dimensions of 2 cm in diameter and 12 cm in length, oriented along the beam. The target will operate at a temperature of $0.5^{\circ}K$, being cooled by a pumped He^3 system. It will be situated in a magnetic field of 25 Kgauss, uniform to $\pm$ 10 gauss over the target volume. Under these circumstances it is known that polarizations of 70% can be obtained.

The He^3 system will be self-contained and closed. Liquid He^4 used in the precooling will be consumed at the rate of 50 liquid liters per day during full-time operation. We would urge the National Accelerator Laboratory to consider the possibility of a helium recovery and liquefaction system, serving this and other facilities, both for reasons of economy and to avoid loss of an irreplaceable natural resource.

A hydrogen-free "dummy" target will be prepared whose mass matches that of the non-hydrogenous materials in the target. A part of the running will be done with this target to evaluate the quasi-elastic background.

D. The Forward Spectrometer

There are two characteristic features of the kinematics of the forward scattered particle. First, the energy of the scattered particle is almost the same as the beam energy and is only a weak function of the momentum transfer. Second, the angle of the scattered particle varies as $\sqrt{-t}/p$. As a result the desired t-bite of 0.15 to 1.5 $(GeV/c)^2$ is compressed in angle as the energy increases. In order to keep the transverse dimensions of the counter system constant and to use a fixed region of the hodoscopes for the same momentum transfer at all energies, it was decided to build a system which scales longitudinally with momentum but has fixed transverse dimensions. Figures 1 and 2 show schematic drawings of the apparatus as it would appear for measurements at 50 GeV/c and 150 GeV/c, respectively. The system uses two bending magnets (for design purposes we considered ANL magnets of type BM-109), four sets of x-y planes of proportional wire chambers, two threshold gas Cerenkov counters, and a number of scintillation trigger counters. The BM-109 bending magnets are 2 m long, have a gap which is 20 cm high and 60 cm wide, and will be run at 18 KGauss. Both magnets and the detectors are mounted on carts which can be moved parallel to the incident beam on a fixed set of rails. The beam passes through the magnets and has a net angular displacement which depends on the energy of the beam. The deflection due to the PPT magnetic field is small.

The proportional wire chambers have a fixed geometry whose scale depends on the distance from the target. Figure 3 shows a drawing of a typical proportional wire chamber. The wire spacing for the chambers in front of the bending magnet is 1 mm, and for the chambers to the rear of the magnet it is 2 mm for

the vertical wires and 2 or 3 mm for the horizontal wires. Thus a total of about 900 wires are required. The dimensions of the chambers are as follows:

Chamber	Horizontal Size	Vertical Size
WS1	13.6cm	7.5cm
WS2	18.2cm	10.0cm
WS3	21.0cm	10.8cm
WS4	35.0cm	18.0cm

Table I gives the bending angle, element positions, and particle intercepts in the chamber at each momentum. The beam passes through a desensitized region of the proportional chambers. The intrinsic angular resolution of the system is determined by the chambers in front of the magnet; it is estimated to be ± 0.07 mr at 150 GeV/c. The resolution in the measurement of the scattering angle depends on the angular resolution of the spectrometer and the angular divergence of the beam. If it is assumed that the beam divergence is ± 0.2 mr the resolution in scattering angle will be ± 0.21 mr. Thus, the measurement of the scattering angle is limited by the beam divergence. The fractional momentum resolution ($\Delta p/p$) is determined jointly by the chambers in front and in back of the magnet; it is estimated to be ± .7% at 150 GeV/c.

In order to provide timing signals for the recoil arm time-of-flight measurements (see below), scintillation counters will be placed behind chambers WS2 and WS4. These counters can be subdivided to reduce confusion due to multiple wire pulses in the chamber. They can also be used to monitor the efficiencies of the proportional chambers.

Table I

Bending Angle, Element Positions, and Particle Intercepts in the Chambers

(X = horizontal, Y = vertical, Z = along the beam)

150 GeV/c

θ (-t = .15) = 2.55 mrad. θ (-t = 1.5) = 7.1 mrad. Magnet Deflection=14 mrad.

Element	Z m.	X(t=0) cm.	X(-t=.15) cm.	X(-t=1.5) cm.	Y($\Phi=\pm 10^{\circ}$,-t=1.5) cm.
WS1	30	0	7.65	21.3	7.1
WS2 (magnet entrance)	40	0	10.20	28.4	9.5
WS3 (magnet exit)	45	3.5	14.98	35.5	10.7
WS4 (+ mirror for C_{π})	75	45.5	64.6	98.8	17.8
Mirror for C_{Kaon}	85	59.5	81.2	119.9	20.2

100 GeV/c

θ (-t = .15) = 3.8 mrad. θ (-t = 1.5) = 10.7 mrad. Magnet Deflection=21 mrad.

Element	Z m.	X(t=0) cm.	X(-t=.15) cm.	X(-t=1.5) cm.	Y($\Phi=\pm 10^{\circ}$, -t=1.5) cm.
WS1	18	0	6.9	19.3	6.5
WS2	25	0	9.5	26.8	9.0
WS3	30	5.3	16.7	37.4	10.7
WS4	50	47.3	66.3	100.8	17.9
Mirror for C_{Kaon}	60	68.3	91.1	132.5	21.5

50 GeV/c

θ (-t = .15) = 7.6 mrad. θ (-t = 1.5) = 21.4 mrad. Magnet Deflection=42 mrad.

Element	Z m.	X(t=0) cm.	X(-t=.15) cm.	X(-t=1.5) cm.	Y($\Phi=\pm 10^{\circ}$,-t=1.5) cm.
WS1	6.5	0	3.8	13.9	4.7
WS2	10	0	7.5	21.4	7.1
WS3	15	10.5	21.8	42.6	10.7
WS4	25	52.5	71.3	106.0	17.9
Mirror for C_{Kaon}	35	94.5	120.8	169.4	25.1

It may also be useful to have anticoincidence counters in the two bending magnets. Two other anticoincidence counters are proposed for reducing the trigger rate due to inelastic processes: a total absorption counter in the direction of the undeflected beam for rejection of events with a neutral component and a counter with a hole in it for reduction of events with associated peripheral pions.

Two of the most important counters in the system are the threshold Cerenkov counters for the identification of pions and kaons. The length of the gas Cerenkov counter used to identify pions is determined by the requirement that it not respond to kaons at 150 GeV/c and that it give sufficient light for reliable detection of pions. The design length of 25 m is sufficient to give better than 90% efficiency at 150 GeV/c. The counter will be made in three sections, and the length will be reduced linearly as the energy of the incident beam is decreased. This will give an ample amount of light at 50 and 100 GeV/c. Table II summarizes the performance of these counters at 50, 100, and 150 GeV/c. It should be noted that the beam passes through the pion counter. A black optical septum will be used to separate the region of the beam from that traversed by the scattered particles. Calculations indicate that the knock-on electrons produced by the beam will not constitute a problem. The beam will not pass through the kaon Cerenkov counter.

E. Recoil Arm Spectrometer

Since the kinematics of the recoil proton are very nearly independent of beam momentum, it is possible to fix the parameters of the recoil arm spectrometer. Our design is shown in Figures 4 and 5. This particular system was

Table II

Expected Performance* of Gas Threshold Cerenkov Counters

Momentum (GeV/c)	Pion Counter Length (m)	Pion Counter No. of Photoelectrons	Kaon Counter Length (m)	Kaon Counter No. of Photoelectrons
50	9	22	9	64
100	18	11	9	16
150	27	7	9	7

* In these calculations we assumed $N = 272 \sin^2 \theta$ photoelectrons/cm. This relation is based on an overall light-collection efficiency of 60% and on the use of a 56 DUVP photomultiplier tube. It is possible that new tubes such as the RCA quanticon will further improve the performance of these counters.

chosen because of its ability to handle high rates. It employs two wide-aperture bending magnets, referred to as MR1 and MR2. The first, bending in the horizontal plane, brings particles satisfying elastic proton recoil kinematics to a parallel focus. It also serves as a sweeping magnet. The second, bending in the vertical plane, provides the momentum analysis. For design purposes we used the specifications of the ANL SCM-105 magnet for both of these. The particular parameter values we have used are:

Magnet	Gap Height	Field x Length	Width
MR1	76cm.	6KGauss x 76cm.	127cm.
MR2	66cm.	6KGauss x 76cm.	190cm.

The first analyzing magnet is placed parallel to the beam, with the side face 80 cm from the target. There is room for a set of wire planes between this point and the polarized target magnet. Such a detector probably could not be used, however, when the beam flux exceeds 10^7/pulse. For this reason we trigger on a set of wire planes placed after the first magnet. Here, many particles which do not satisfy elastic recoil proton kinematics have been removed and the counting rate is expected to be tolerable ($< 5 \cdot 10^5$ counts/10^8 beam protons through these chambers). Elastic recoil protons will emerge parallel within $\pm 2.5^\circ$ throughout the range $0.15 \leq -t \leq 1.5$ $(\mathrm{GeV}/c)^2$. This feature can be utilized in the triggering system.

The azimuthal angular aperture ϕ is defined by the exit of the first magnet as $\pm 10^\circ$. The second magnet bends in the vertical direction, thus preserving the maximum ϕ aperture, taking advantage of the relatively narrow parallel focus, and partially decoupling the momentum from the angular measurement.

There are two sets of wire planes between the two magnets and two more after the second magnet. The sets are separated by 80 cm in both cases.

The size of the planes will be:

Position	Horizontal Size	Vertical Size
WR1 (exit of first magnet)	50cm	100cm
WR2 (entry to second magnet)	50cm	130cm
WR3 (exit of second magnet)	60cm	200cm
WR4 (final)	65cm	256cm

The wire spacing will be 2 mm so that the chambers will have an angular resolution of about ± 2.5 mr. The momentum resolution will be about ± 3.5% at p = 1.5 GeV/c (corresponding to $-t = 1.5\ (\mathrm{GeV}/c)^2$) and about ± 1% at p = 0.4 GeV/c ($-t = 0.15\ (\mathrm{GeV}/c)^2$).

The r.m.s. multiple scattering angle of a recoil proton emerging from 2 cm of hydrocarbon is about 1.5° at 0.4 GeV/c, going down to less than 0.2° at the highest momentum transfer. For purposes of establishing coplanarity this amount of scattering amounts to a transverse momentum uncertainty of ± 10 MeV/c in the worst case, which is negligible compared to the uncertainties in the forward arm.

The momentum loss in traversing 1 cm of hydrocarbon is about 25 MeV/c at 0.4 GeV/c, going down to about 3 MeV/c at the largest momentum transfer. This means that the effective momentum resolution of the recoil arm ranges from ± 3.5% at large t to ± 6% at small $|t|$. The error in reconstructing the

production angle is determined by the momentum error and the multiple scattering. At $-t = 1.5\ (\mathrm{GeV}/c)^2$, it is about $\pm\ 0.4^\circ$ and at $-t = 0.15\ (\mathrm{GeV}/c)^2$ it is about $\pm\ 0.8^\circ$.

There is a partial physical separation of the higher and lower momentum transfer events after the first stage of the recoil arm spectrometer. (It would be complete except for the finite target length.) When running at high beam rates, in order to obtain a reasonable rate of higher momentum transfer events, we will want to suppress the more abundant low t triggers. This can be accomplished by turning off some of the wires, by increasing the field of the vertical bending magnet, and/or by restrictions in the fast logic.

The recoil particle will also be detected in a scintillation counter behind WR4. The time difference between its output and a signal from the forward arm will be digitized and recorded with each event. Using wire chamber information an off-line analysis can correct this time-of-flight for effects due to variations in the trajectory and intersection with the scintillator. Over a distance of 6m the time-of-flight separation between pions and protons varies between 4 and 30 nsec. Thus a time resolution of 1 nsec, together with an accurate knowledge of the flight path, should enable us to discriminate cleanly against pions in the recoil arm.

We should note that an alternate design of the recoil arm can be made with a single SCM-105 magnet, placed further from the target than is shown in Figure 5 and set up with a larger aperture (on the order of 91 cm or more), which is quite feasible with this magnet. Either a horizontal or a vertical bend could be used. Such a design, however, might limit the rates that could be accepted in this arm.

Finally, we note that if the SCM-105 magnet were used in a vertical position as shown in Figure 5, it would require at the magnet a floor ~ 110 in. below the beam. If used in the horizontal position, it would require 54"; this is characteristic of all ANL magnets, including the BM-109.

F. Trigger Logic and Data Handling

The rate at which data can be accumulated is limited by the data handling capability of the on-line computer. It is therefore essential that a fast trigger logic system be employed which imposes kinematic constraints in order to reduce the number of inelastic and quasi-elastic events which enter the computer. A small fraction of these background events must still be recorded, however, to facilitate background evaluation.

The logic system is based on fast (~50 ns resolution) coincidences between kinematically selected regions of the proportional chambers in each of the spectrometer arms. Selection of events will be made by imposing the following constraints:

1) The recoil particle must exit MR1 approximately parallel ($\pm 2.5^{\circ}$) to a fixed direction in the horizontal plane;

2) In the vertical plane the recoil particle must have come from the target;

3) The recoil particle must have its momentum within an acceptable range for the t region under investigation;

4) The scattered particle must have a horizontal angle θ ($\pm$ 5mr) and momentum ($\pm 2\%$) consistent with elastic scattering;

5) The recoil and scattered particles must satisfy coplanarity. These criteria can be imposed by a relatively small matrix of coincidence requirements between various regions of the wire chambers.

The identity of the forward scattered particle, obtained from the threshold Cerenkov counters, will be an important input to the fast trigger logic in π^+p, $K^{\pm}p$ scattering. The time-of-flight of the recoil particle will be recorded in order to be able to reject background due to pions.

In order to estimate the amount of data which must be handled and stored in this experiment, we used the following numbers:

number of proportional wire chambers:	16
number of wires:	4096
number of wire pulses allowed/event:	20
events/beam spill:	1000

The information from the proportional chambers can be encoded into 10 24-bit words within 8-10 μ sec. An additional 2 24-bit words are reserved for time-of-flight and other information. These 12 data words can be transmitted to an on-line computer for storage in about 100 μ sec.

The trigger logic and encoding system has only been presented here in outline form because it involves a great deal of detail. However, on the basis of recent advances in the technology of integrated circuits we feel confident that such a system can be built with the needed speed, reliability, and flexibility.

At 10^3 events/spill a computer storage capacity of 12,000 24-bit words is required. At the end of the spill the computer has 4 millisec/event available which should suffice to eliminate bad candidates ($\sim$ 20%) and give some feedback about the performance of the equipment. The filtered sample will

then be written on magnetic tape for later detailed reconstruction and analysis on an off-line computer.

A suitable on-line computer would have to comprise the following:

1) mainframe with at least 16 K core (24 bit word)

2) 2 magnetic tape units, IBM compatible

3) teletype

4) display scope

A disc file or an additional 16 K of core would be very desirable.

The off-line analysis of the events will probably be done in two stages. A fast screening program should be able to reject most of the inelastic events which were recorded without having to reconstruct the trajectories in detail. This would save time in running the final reconstruction program, perhaps as much as a factor of two. In order to provide for fast feedback between the data analysis and the data collection we would like to process the data tapes with the fast screening program at the NAL computing facility; this would require an estimated 100 hours of computer time.

III. COUNTING RATE AND RUNNING TIME

In estimating counting rates we used phenomenological predictions[3] of the differential cross sections and made the following assumptions:

1) Target: 12.5 cm long polarized proton target (6.5×10^{23} protons/cm^2), 70% polarization.

2) Azimuthal acceptance: $\pm 10^{\circ}$.

3) Beam Repetition Rate: 10 pulses/min.

4) Quasi-elastic triggering rate: 4 times the elastic rate.

5) Inelastic triggering rate: This was estimated using Monte Carlo generated events in which we assumed that the dominant inelastic processes have a t- dependence similar to the elastic ones and that our triggering system can reject inelastic events with more than three outgoing particles. The angular distributions generated in this program were based on extrapolations of BNL data at 28.5 GeV/c, and the total rates were based on the Serpukhov data[1] and extrapolations from it. From this we conclude that the number of inelastic triggers should be about equal to the sum of the elastic and quasi-elastic ones.

6) Accidental rates: Using these estimates we find that at $t = -0.15$ $(\mathrm{GeV}/c)^2$ the singles rate in our proportional chambers should be less than 5×10^5/pulse at a beam rate of 10^8/pulse. Assuming the resolving time of the chambers to be 50 nsec we find that the accidental rates should be less than 3% under our running conditions.

These considerations give a ratio of total to elastic triggers of 10 to 1. An estimated signal-to-noise ratio of 1 to 1 for the final distribution containing the elastic peak was used in the rate calculations, although the expected ratio is significantly better.

We aim to obtain polarization values with a statistical uncertainty of $0.005 \leq \Delta P \leq 0.02$ in bins of $\Delta t = 0.1$ $(\mathrm{GeV}/c)^2$ over the range $0.15 \leq -t \leq 1.0$ $(\mathrm{GeV}/c)^2$. The data for $-t > 1.0$ $(\mathrm{GeV}/c)^2$ will be less accurate; the worst point should be better than 10%. In calculating the required beam intensity we estimated the data handling capability of the on-line computer to be 1000 total triggers/pulse, of which 100 events are expected to be elastic. To optimize

running efficiency we plan to divide our measurements into two or three t ranges. Table III shows those t ranges, beam intensity, and the number of shifts required to obtain the accuracy mentioned above, for pp, π^+p and π^-p elastic scattering at 50, 100, and 150 GeV/c. Data on $K^{\pm}$ and $\bar{p}$ will be taken simultaneously.

Thus, we request 70 8-hour shifts for the data taking and 10 shifts for background studies. Assuming a running efficiency of 80% (10% polarization reversal time, 10% equipment failure contingency) a total of 100 shifts is requested. In addition we request 40 shifts of parasite time for setting up and tuning..

If approval for this experiment is granted in the fall of 1970, we will be able to have all the apparatus built and tested as early as the spring of 1972.

IV. SUMMARY OF ITEMS SUPPLIED BY THE EXPERIMENTERS AND REQUESTED FROM NAL

A. We expect to be able to supply the following items:

1) The polarized proton target.

2) The proportional chambers.

3) All scintillation counters, spectrometer Cerenkov counters, and lead-glass veto counters.

4) Electronics for the fast triggering, including pattern recognition, together with the interfacing to the on-line computer.

5) Software for on-line and off-line computers.

6) Most of the computer time needed for off-line analysis.

B. We request NAL to supply the following items:

1) The beam, tuned to our focal conditions, adequately shielded.

Table III

Reaction	P(GeV/c)	$\lvert t \rvert$ range*	Incident Particles/pulse	Shifts**
pp	50	0.15-0.70	$2 \cdot 10^6$ protons	1.5
		0.60-1.05	$6 \cdot 10^7$	2
		0.90-1.50	10^8	3
	100	0.15-0.60	$2 \cdot 10^6$	1.5
		0.60-1.05	$7 \cdot 10^7$	2
		0.70-1.50	10^8	4
	150	0.15-0.60	$2 \cdot 10^6$	1.5
		0.60-1.05	$8 \cdot 10^7$	2
		0.90-1.50	10^8	5
π^+p	50	0.15-0.60	$3 \cdot 10^6$ pions	2
		0.60-1.50	$2 \cdot 10^7$	3
	100	0.15-0.60	$3 \cdot 10^6$	2
		0.60-1.50	$2 \cdot 10^7$	3
	150	0.15-1.50	10^6	20
π^-p	50	0.15-0.60	$3 \cdot 10^6$ pions	2
		0.60-1.50	$4 \cdot 10^7$	3
	100	0.15-0.60	$3 \cdot 10^6$	2
		0.60-1.50	$4 \cdot 10^7$	3
	150	0.15-0.60	$4 \cdot 10^6$	2
		0.60-1.50	$4 \cdot 10^6$	5
			Total:	70

* Except in the highest $\lvert t \rvert$ range for each momentum and reaction the worst case statistical error is approximately 2%. The best case is significantly better than 1/2%.

** The running periods for pp and π^+p are shown separately for clarity. In many cases we will be taking data simultaneously. But since we are computer limited at these points, the total number of shifts required is unchanged.

2) A sensitive ion chamber to monitor the beam flux; digitized ion chambers to monitor the beam location, profile, and emittance at our target position if available.

3) A helium liquifier or an adequate supply of liquid helium to run the polarized proton target.

4) Engineering and technical support required for survey and installation of the experimental equipment including installation of the rails for the forward spectrometer.

5) A shielded location near the downstream part of the experimental area to place our fast logic.

6) Access to the PREP electronics store for various miscellaneous items for temporary use, together with facilities for the repair of defective modular elements.

7) About 100 hours of time on a large off-line computer.

C. In addition, we wish to make the following points:

1) We would like NAL to supply the equivalent of two ANL BM-109 magnets and two ANL SCM-105 magnets, complete with power supplies. If this is not possible, we will attempt to secure them on loan from other laboratories.

2) A beam Cerenkov counter for electron veto is probably a necessary item. We would like NAL to supply this.

3) It would greatly facilitate our data storage and on-line data processing to be linked to a large time-sharing central computer facility. We would expect the interface to this to be supplied by NAL.

4) We request that NAL supply the on-line computer; if this is not possible we will attempt to procure it from our groups.

REFERENCES

(1) Proceedings of the International Conference on Expectations for Particle Reactions at New Accelerators, University of Wisconsin, April, 1970.

(2) Symposium on Polarization at High Energies, Argonne National Laboratory, April, 1970.

(3) V. Barger and R. J. N. Phillips, Phys. Rev. 187, 2210 (1969).

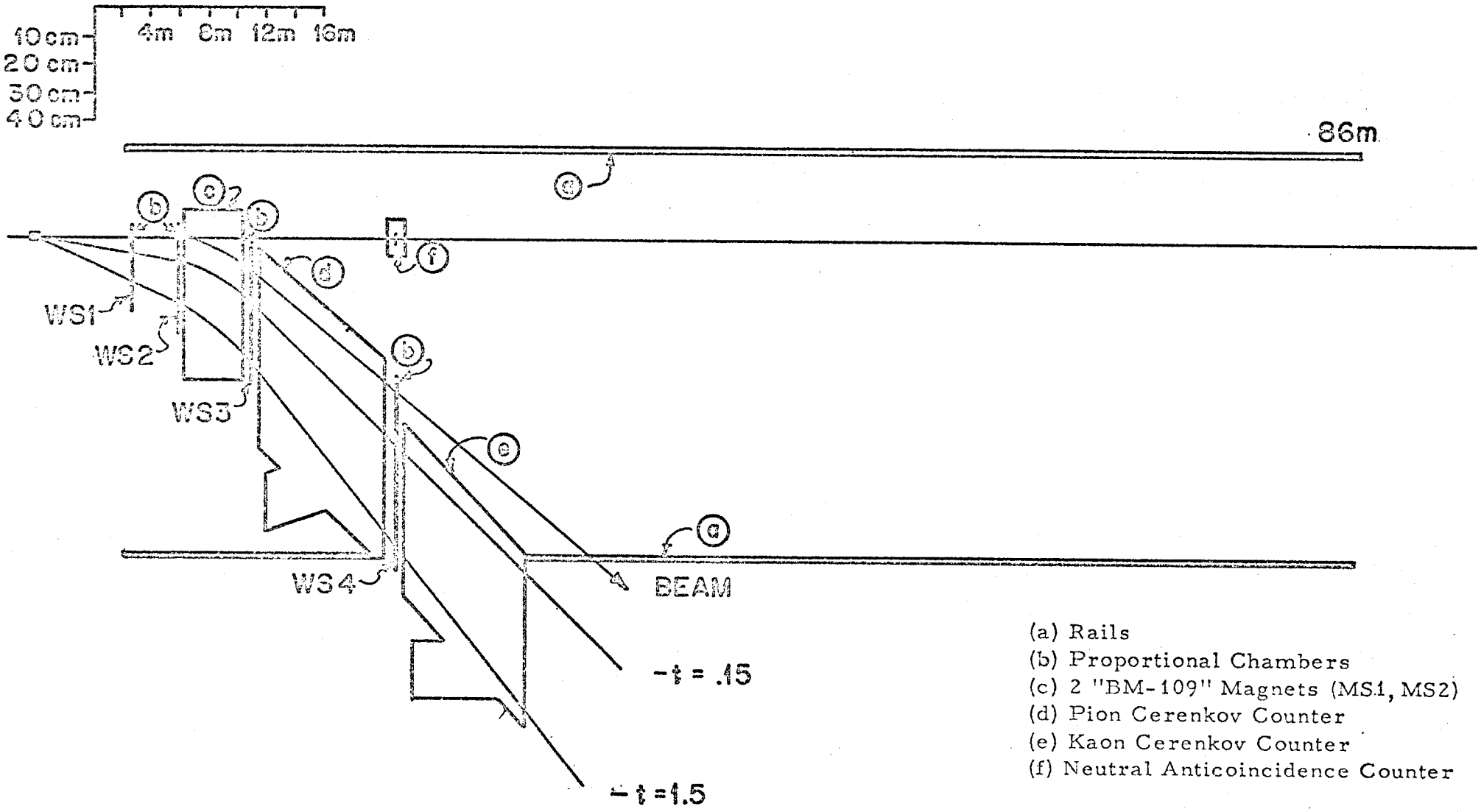

FIGURE 1

FORWARD SPECTROMETER LAYOUT AT 50 GeV/c

61-24

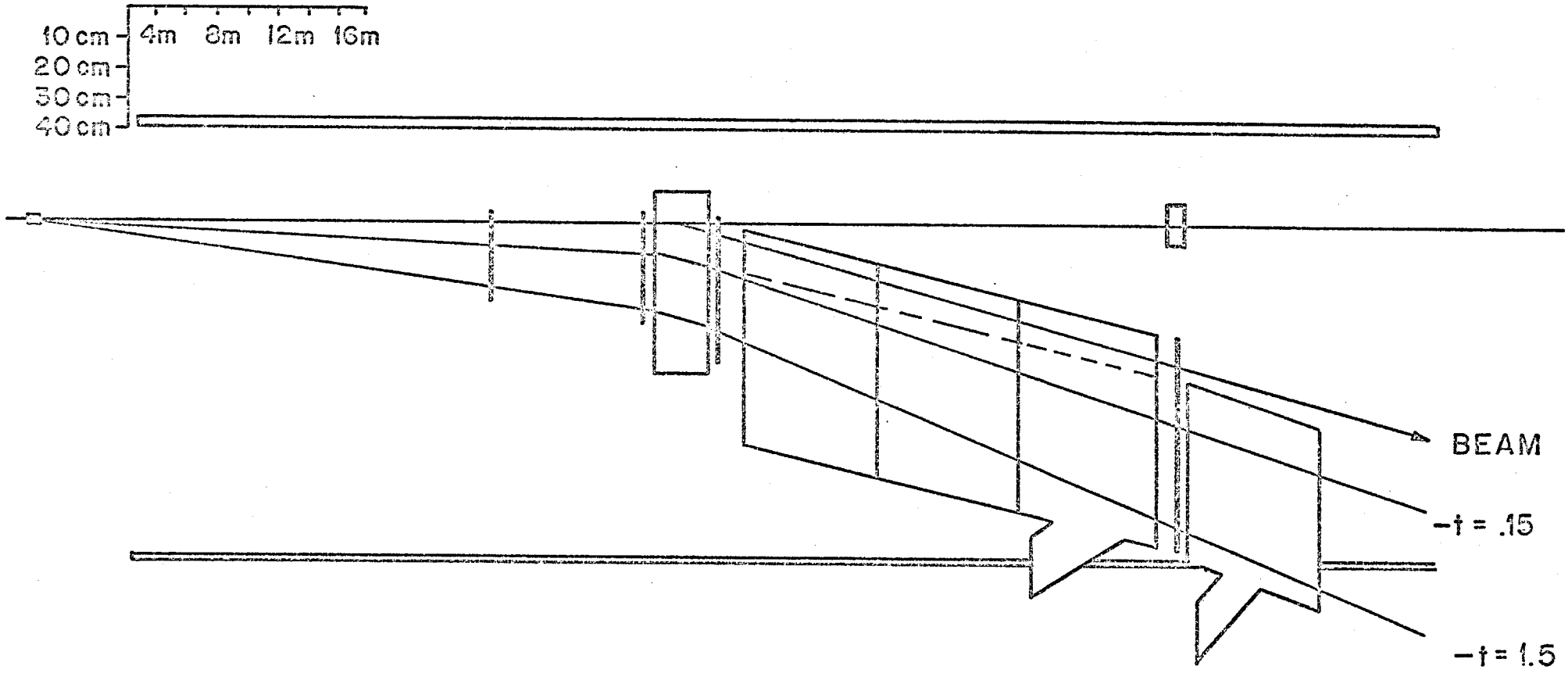

FIGURE 2

FORWARD SPECTROMETER LAYOUT AT 150 GeV/c

61-25

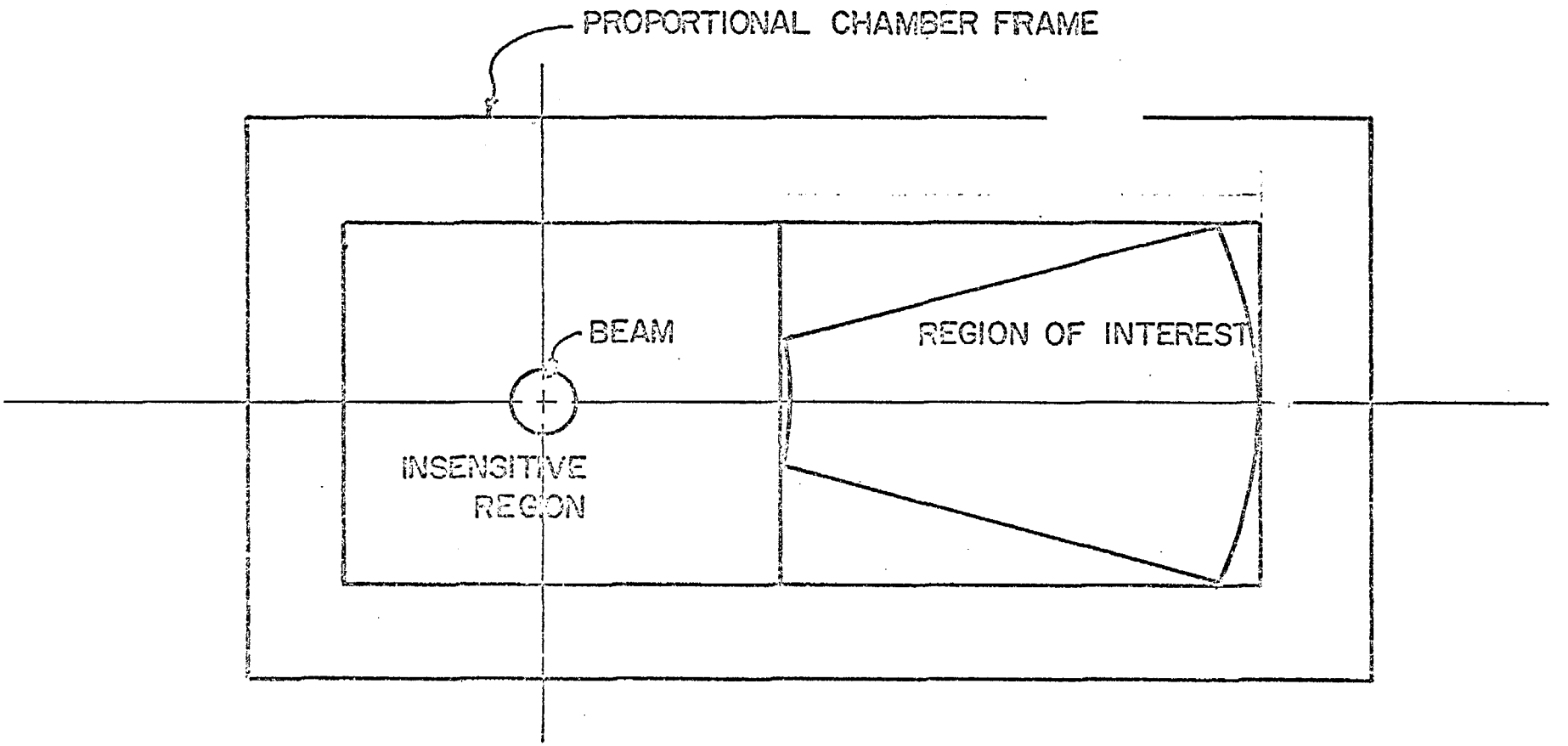

FIGURE 3

TYPICAL PROPORTIONAL CHAMBER IN THE FORWARD SPECTROMETER

61-26

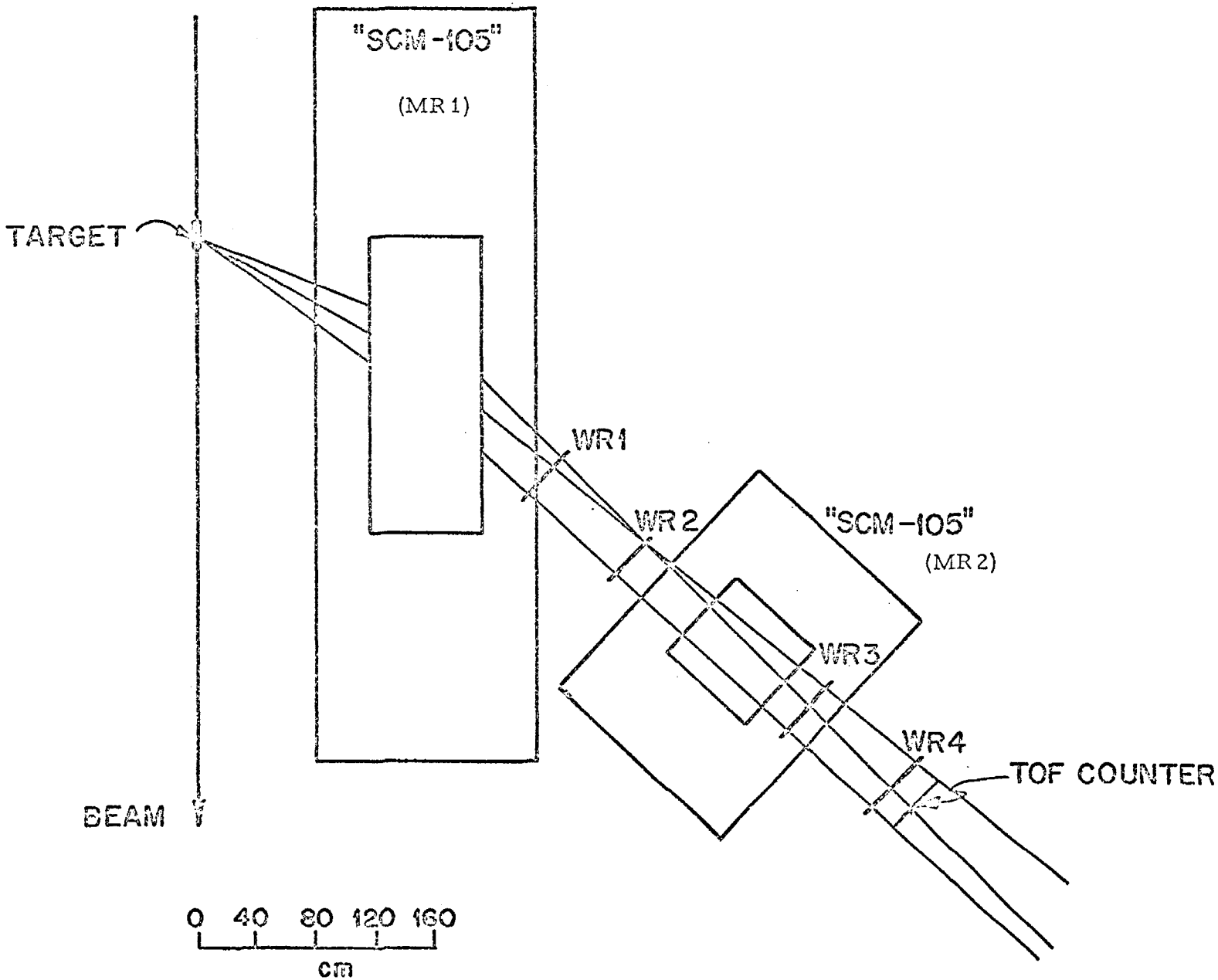

FIGURE 4

RECOIL ARM SPECTROMETER (PLAN VIEW)

61-27

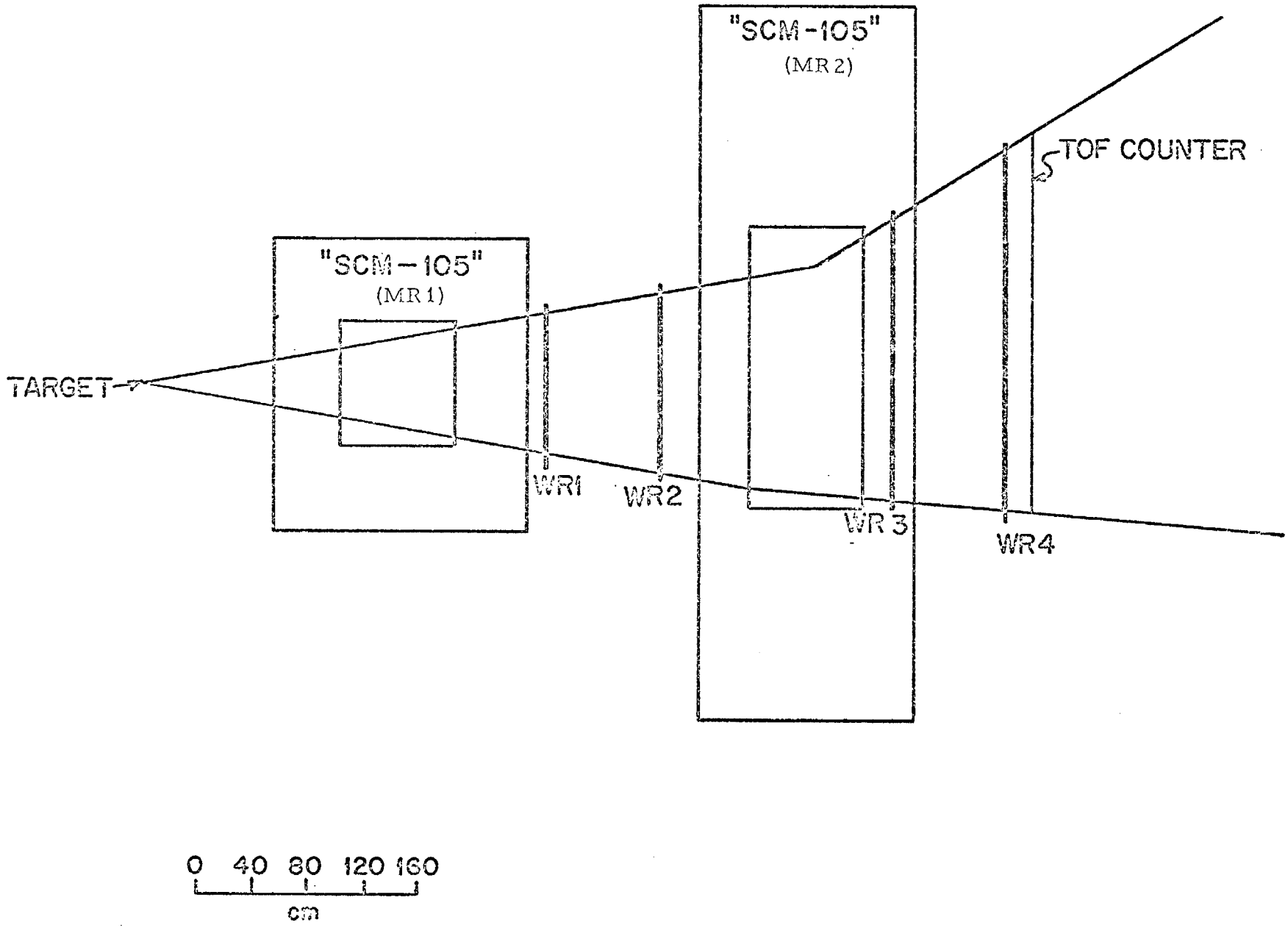

FIGURE 5

RECOIL ARM SPECTROMETER (ELEVATION)

61-28

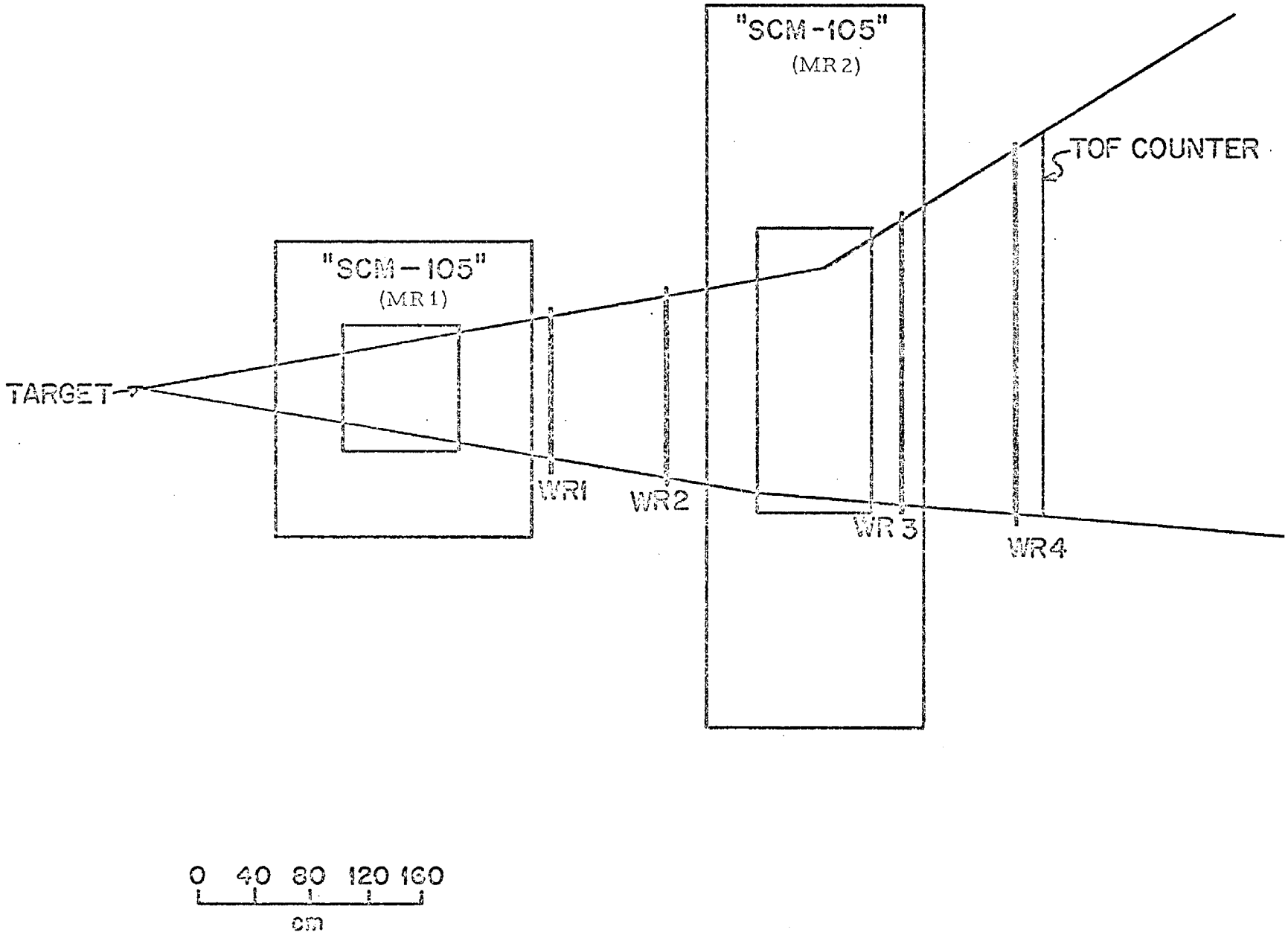

FIGURE 5

RECOIL ARM SPECTROMETER (ELEVATION)

61-29