NAL PROPOSAL No. 57

Correspondent: S. J. Lindenbaum
Brookhaven National Lab
Upton, L.I., N.Y. 11973

FTS/Commercial 516-924-2538

BEHAVIOR OF HIGH ENERGY ELASTIC SCATTERING AND TOTAL CROSS SECTIONS FOR $\pi^{\pm}$-p, $K^{\pm}$-p, p-p, and $\bar{p}$-p

K. J. Foley, W. A. Love, S. J. Lindenbaum, S. Ozaki,
E. D. Platner, A. C. Saulys, E. H. Willen
Brookhaven National Laboratory

R. D. Ehrlich, V. Hughes, D. C. Lu, S. Mori, M. E. Zeller
Yale University

Y. Yamada
National Accelerator Laboratory

June 8, 1970

BEHAVIOR OF HIGH ENERGY ELASTIC SCATTERING AND TOTAL CROSS SECTIONS FOR $\pi^{\pm}$-p, $K^{\pm}$-p, p-p, and $\bar{p}$-p

July 24, 1970 NAL PROPOSAL 57

S. J. Lindenbaum desires to add that the experiment can do approximately 40 points in energy for each of the 6 incident particles. Data can be taken at 5 GeV or less spacing. The data rate is adequate for 2-5 GeV spacing.

The time estimates given in the proposal are, according to Lindenbaum, to be considered as real times in what they believe will be the early NAL environment.

F. T. Cole

PROPOSAL FOR NAL EXPERIMENTAL PROGRAM

Behavior of High Energy Elastic Scattering and Total Cross Sections

For $\pi^{\pm}$-p, $K^{\pm}$-p, p-p, and $\bar{p}$-p

Abstract

It is proposed to extend to the NAL energy range the investigation of elastic "diffraction" scattering and precision measurements of the total cross sections performed at BNL during the past decade. It is expected that this investigation will be of considerable interest and importance in regard to understanding the asymptotic behavior of forward and near forward scattering amplitudes.

The investigation will be composed of two highly complementary parts, which, in common, utilize the same beam, most of the same equipment, and the same experimental area region.

As our past experience has demonstrated, a knowledge of both the elastic "diffraction" scattering and the total cross sections to high precision is necessary to allow a meaningful theoretical analysis of either.

Experimenters: K. J. Foley, W. A. Love, S. J. Lindenbaum, S. Ozaki, E. D. Platner, A. C. Saulys, and E. H. Willen
Brookhaven National Laboratory

R. D. Ehrlich, V. Hughes, D. C. Lu, S. Mori, and M. E. Zeller
Yale University*

R. Yamada
National Accelerator Laboratory

June 8, 1970

Correspondent: S. J. Lindenbaum

---

* The Yale group is particularly interested in the high energy elastic scattering measurements since this investigation and its equipment is particularly relevant to future polarization measurements utilizing polarized targets, in which they have a long term interest.

Physics Justification

Almost a decade ago it was demonstrated at BNL that the behavior of the elastic diffraction scattering of $\pi^{\pm}$, $K^{\pm}$, p, $\bar{p}$ by protons was an unexpectedly complex phenomenon. The original expectations that the vacuum pole (P) would dominate in the BNL energy range and lead to a universal shrinkage of the diffraction pattern were clearly shown to be incorrect[1]. As time passed, these and other scattering experiments led to an ever increasing complexity[2] in the frequently reformulated Regge pole solution, which now rely on cuts to explain the behavior of early Serpukhov measurements[3].

It is obvious that a detailed high precision investigation of these basic elastic scattering processes in the NAL energy range is justified from the Regge Model or any other theoretical point of view. The best way to demonstrate this historically is that plans were made for the BNL 1962 elastic scattering experiments starting in 1958 which, for example, predated the Regge pole era; the new counter hodoscope with on-line computer techniques introduced were developed purely to measure $\frac{d\sigma}{dt}$ (s,t) to the best precision and statistical accuracy that we could attain at the time. A similar investigation at NAL energies will be of great value in clarifying whether a unique and convincing explanation of asymptotic behavior of diffraction scattering can be attained through the range of NAL energies. It has also been clearly demonstrated in the past that a knowledge of the behavior of the elastic scattering of all of the listed reactions is at the minimum necessary to provide a test of the proposed theoretical solutions which are expected to arise both prior to and subsequent to the availability of the data.

Furthermore, it has been convincingly demonstrated in the past that any sensible attempt at a theoretical analysis of the elastic diffraction scattering requires a knowledge of precision measurements of the total cross sections and vice-versa.

During the past decade a series of measurements of total cross sections of elementary particles at high energy were performed at BNL. The most recent measurements[4] for p-p interactions from 8 to 26 GeV/c, π^--p from 7 to 28 GeV/c, and π^+- from 8 to 22 GeV/c, had absolute errors of $\pm$ 0.3%, a precision much higher than that obtained by other investigators. Such accuracy was made possible by the use of a hodoscope system to measure the scattering angles sufficiently accurately to reduce substantially the size and uncertainty of the extrapolation to zero angle; in this experiment the uncertainty in this extrapolation, usually the largest absolute error in total cross section measurements, was reduced to $\lesssim$ 0.1%. These experiments formed the basis for many of the critical conclusions in regard to asymptotic behavior of the forward and near forward scattering amplitudes. We now propose to extend these measurements to the higher energy range available at NAL.

Recent measurements of total cross sections performed at Serpukhov[5] by a USSR-CERN team are shown in Figs. 2a-b, plotted versus 1/P. Earlier results are also shown. It is clear that the much lower precision of the new measurements make it very difficult to reach any conclusion on the asymptotic behavior of the total cross sections, including the questions which have been raised as to the validity of the Pomeranchuk theorem especially in regard to the $K^- + \binom{p}{n}$ measurements. These questions have been recently reviewed in detail.[6]

It is quite clear to us that measurements of at least comparable, and preferably higher, precision than those obtained at BNL are absolutely essential if the important question of asymptotic behavior is to be investigated

critically. The combination of the much higher energies available at NAL and the high accuracies that we plan to attain should lead to significantly improved understanding of asymptotic cross section behavior.

Thus we propose to use similar equipment and techniques to those previously employed at BNL to extend these measurements to the energy range available at NAL for $\pi^{\pm}$, $K^{\pm}$, p, and $\bar{p}$ on hydrogen and deuterium.

Experimental Arrangement - Elastic Scattering Measurements

The apparatus is shown in Figure 1. The scintillation counter hodoscopes H1 and H2 will be used to measure the angles and position of the particles incident on the target. The angles (θ and ϕ) of the forward scattering particles will be measured with the hodoscope HS, and the angles (θ and ϕ) of the recoil proton will be measured with the hodoscopes HT and HR. Coplanarity and the correlation between the scattered and recoil angles will be used to identify elastic scattering events. The apparatus is very similar to that used in 1962 and 1964[1] to measure elastic scattering of protons, antiprotons, pions, and kaons over the range of incident momentum 7 to 26 GeV/c. At high energy the momentum and direction of the recoil proton are a function only of t, and so HT and HR will remain fixed. However, HS will be moved downstream with increasing energy so as to hold constant the range of t covered. At 200 GeV/c* the distance from H1 to HS will be ~ 300 feet. H1 can be placed just downstream of the last beam transport magnet which will considerably reduce the size of the experimental area required. The resolution of various parts of the system is given in Table I.

* It is obvious that this experiment can also be extended to ~ 500 GeV/c when such beam energies are available.

Because of uncertainty in the losses due to interactions and multiple scattering, the minimum useful recoil proton energy will be 50-100 MeV, corresponding to a $|t|$ of 0.1 to 0.2 $(GeV/c)^2$. Our apparatus will cover values of $|t|$ out to ~ 2 GeV/c^2, but barring the appearance of new bumps in the differential cross section, our earlier measurements indicate that the non-elastic background, which is negligible at smaller $|t|$, will limit accurate measurements of the elastic differential cross section to $|t| \lesssim 1.5$ $(GeV/c)^2$.*

The fractional solid angle subtended is virtually constant over the whole t range at $\sim 15\%$. The cross section for elastic scattering in the range $|t| = 0.1$ to 1.5 $(GeV/c)^2$ is estimated to vary from ~ 3 mb for p-p scattering to ~ 1 mb for π-p scattering. With a 1 second flat top, beam rates of 10^6 particles/pulse are well within the capability of our electronic circuits, Cerenkov counters, and scintillation counters. Assuming 10^6 particles per pulse and a two foot target length (such targets are available at BNL) for p-p scattering, our apparatus would accumulate 1000 elastic scattering events per pulse. Because of the sharp fall-off of differential cross section with increasing $|t|$, the events will be predominantly at small $|t|$, but, for example, a one hour run would give $\gtrsim 200$ elastic events in the range $|t| = 0.9$ to 1.0 $(GeV/c)^2$ and $\gtrsim$ 200,000 events in the range $|t| = 0.2$ to 0.3 $(GeV/c)^2$. Since the capacity of the data handler is > 4,000 events/pulse, we plan to measure cross sections for incident pions, kaons, and protons (or antiprotons) simultaneously. Taking into account the momentum dependence of the fraction of pions, kaons, and antiprotons in the beam, we feel that in a run consisting of 100 test hours and 400 hours of data taking, we expect to collect data at more than 20 different momenta between 25 GeV/c and 200 GeV/c.

*Cerenkov counter identification of the recoil proton is another possibility for reducing background in the higher $|t|$ region.

Our experience with scintillation counters shows that it is possible to determine the efficiency of a well-constructed hodoscope to better than 1% and, equally important, the use of an on-line computer permits the monitoring of this efficiency during the actual data taking. All of the hodoscopes described in this proposal are designed rather conservatively, and so barring unusual photomultiplier tube failure, we expect that they will require little or no adjustment during the run. We expect that systematic errors in the absolute differential cross sections will be $\lesssim$ 1%. In addition, since the position of the forward hodoscope is moved to cover exactly the same range of t, independent of momentum, we will make even more precise measurements of the energy dependence of the variation of the shape of the diffraction peak. For this particular range of t, we consider this straightforward method superior to more complicated setups using large numbers of magnets, etc. Also, the techniques that we propose are very well established and require no new developmental program.

Experimental Arrangement - Total Cross Section Measurements

The proposed setup is shown in Figure 3. The beam, Cerenkov counters, incident beam hodoscopes H1 and H2, hodoscope HS, and the data handling and computer equipment are identical to those used in the elastic scattering measurements, the primary differences in equipment being substitution of a ten foot hydrogen target and the fact that HR and HT are no longer necessary. Incident angles will be measured with the hodoscopes H1 and H2. Outgoing angles will be measured with HS. The trigger will consist of H1 and H2 in coincidence with the relevant Cerenkov counters. For those events with a single particle in HS, the scattering angle will

be calculated and an extrapolation to zero angle of the attenuation in the target can be made. H1 and H2 will remain fixed during the experiment while two locations will be used for HS: one for the energy region 20 to 80 GeV/c and the other from 50 to 200 GeV/c.* The angular resolution for the two setups is given in Table I. The total length of the setup from H1, which can be located right downstream of the last beam transport element, to HS is $\sim$ 300 feet for the high momentum setup. It is of particular interest to note that in the high energy setup, the resolution of $\sim$ 0.1 mrad is sufficiently good to permit attenuation measurements down to $|t| \lesssim 0.005$ $(\mathrm{GeV/c})^2$ even at 200 GeV/c; from this point, extrapolation to t=0 involves a correction of 2% (half of this is elastic) for p-p and 1% for π-p scattering. The single Coulomb scattering cross section at this value of $|t|$ is $\sim$ 0.1 mb. Since we will have at least 20 points at well-defined values of $|t|$ on the curve used for extrapolation, we will therefore virtually eliminate the largest uncertainty in conventional counter techniques. Another feature is that for each bin the precise knowledge of the value of t permits accurate correction for multiple and single Coulomb scattering.

The liquid hydrogen target will be double-jacketed to reduce bubbling, with the outer container pressure controlled to ensure precise knowledge of the density (to $\pm$0.03%). The liquid deuterium target which has a similar construction will also be used. Thus the total cross sections with neutron targets can be deduced. Obviously accuracy of these neutron target measurements will be considerably degraded due to the Glauber type corrections, and thus they will be of only secondary value. A dummy target will be used to reduce time

* It is obvious that this experiment can also be extended to $\sim$ 500 GeV/c when such beam energies are available.

loss due to the changing of targets. A target length of 10 feet seems optimum. Targets of this type were used in the previous BNL program and are available at BNL. We intend to attempt to arrange to use these if new targets cannot be constructed at NAL.

Logic circuits will be used to test for the presence of two particles in H1 and/or H2 within the resolving time of the fast gates ($\sim$ 5-6 nsec.). This signal, together with pulses from veto counters surrounding H1 and H2 will be used to veto the incident particle signal when two particles traverse the system within the resolving time of the equipment. This will reduce the accidental rate to a negligible level without biasing the results. The muon contamination of the pion beam will be measured using steel to attenuate the pions. The exact amount of steel necessary will be determined by a range measurement in the pion and proton beams, but about 8-10 feet will probably suffice. The electron contamination will be measured with lead glass Cerenkov shower counters and at the lower energies with a threshold Cerenkov counter if the contamination is higher than expected. We expect the electron contamination to be negligible above 50 GeV/c when the accelerator is operated at 200 GeV.

The rate of acquisition of data will be limited by the number of events that can be stored per pulse in the buffer memory. With the existing data handler we can accumulate 12,000 events/pulse, and we intend to double the size of the buffer memory, a relatively easy change. Using a 10 foot long hydrogen target, we then find that for a 0.1% statistical fractional error we will need $\sim$ 10 mins/full target run and somewhat less per empty target run. Thus, including magnet changes and full target, empty target cycles, our anticipated

running time per data point is $\sim$ 1 hour. Since the apparatus can handle 10^6 particles/pulse with reasonably low accident events, this estimated running time applies for protons of up to full machine energy and other particles up to the momenta shown in Table II. Above these energies the runs will need to be longer, or less statistical accuracy will be achieved.

As mentioned above, the use of hodoscopes to detect incident and scattered particles gives us precise knowledge of t as well as allowing us to measure the attenuation down to very small values of $|t|$. Thus accurate Coulomb scattering corrections can be applied. In addition, we will have many points on the curve to be extrapolated to t=0, thus reducing the uncertainty in what is a small correction relative to that encountered in conventional total cross section measurements. As mentioned above, accidental effects will be very small. We estimate that we can achieve an absolute precision of $\pm$ 0.2% up to the energies listed in Table II, with the accuracy at higher energies determined by beam rates and available running time.

We at present estimate that after satisfactory setups of the beam, that about 50 hours of test time and about 400 hours of running time will be a reasonable estimate for the experimental program.

Apparatus - Elastic Scattering Measurements

Either leg of the high energy,high resolution charged secondary particle beams will be satisfactory.

We plan to provide all of the detectors, high voltage supplies and particle selection and trigger electronics. We would prefer that NAL supply the necessary Cerenkov counters as part of the beam, but we are prepared to consider providing our own, if necessary. We prefer that NAL provide the liquid hydrogen target, but we

will consider bringing one from BNL if necessary. We will supply the fast gates, the buffer memory, and the magnetic tape transports. Part of a PDP-10 or equivalent computer (in time-sharing mode) is requested, but we will, if necessary consider alternate arrangements with other local computer facilities and, also if required, consider the possibility of utilizing a BNL computer. Either of the high energy, high resolution 2.5 mrad beams would be suitable for this experiment. It is also interesting to note that this beam, detection equipment, and data handling equipment could also be useful for future polarized target experiments, and we would be willing to cooperate with groups interested in that program to the extent that such efforts can be mutually beneficial. Also the incident beam system is identical to that proposed by us for use in a total cross section measurement.

In summary, apart from the beam, little or no apparatus is required from NAL for this experiment. We foresee no difficulty in being ready to run this experiment when the NAL experimental program begins (September, 1972).

Apparatus- Total Cross Section Measurements

The same beam arrangement described for the elastic scattering measurements is required.

We would prefer NAL to provide the 10 foot hydrogen and deuterium target, but will consider using a BNL target if necessary.

The beam system and hodoscopes and HS are identical to the equipment required for the elastic diffraction scattering experiment, and we will use this same equipment.

Data Handling and On-Line Computer Requirements

We plan to supply a digital data handling device with tape transports for handling and recording the data. This is the same equipment which is required for the elastic scattering experiment. We will need access to part of a PDP-10 (or equivalent) on-line computer for on-line data analysis. We assume that such facilities will exist at NAL. If not, other arrangements, including the possibility of using a BNL computer will be considered.

REFERENCES

1. K. J. Foley, S. J. Lindenbaum, W. A. Love, S. Ozaki, J. J. Russell, and L. C. L. Yuan, Phys. Rev. Letters 10, 376 (1963); Phys. Rev. Letters 11, 503 (1963), and S. J. Lindenbaum, Contemporary Physics Trieste Symposium 1968, Vol. II, pp 123-143, International Atomic Energy Agency, Vienna, 1969.

2. G. C. Fox, High Energy Collisions, Proc. of the Third International Conference on High Energy Collisions, Stony Brook, September 5-6, 1969, pp. 367-460, Gordon and Breach, Science Publishers, Inc., New York, 1969; L. Van Hove, Contemporary Physics Trieste Symposium 1968, International Atomic Energy Agency, Vienna, 1969; V. Barger, M. Olsson, and D. D. Reeder, Nucl. Phys. B5, 411 (1968), and V. Barger and R. J. N. Phillips, Phys. Rev. Letters 24, 291 (1970).

3. J. V. Allaby, Yu. B. Bushnin, S. P. Denisov, A. N. Diddens, R. W. Robinson, S. V. Donskov, G. Giacomelli, Yu. P. Gorin, A. Klovning, A. I. Petrukhin, Yu. D. Prokoshkin, R. S. Shuvalov, C. A. Stahlbrandt, and D.A. Stoyanova, Physics Letters 30B, 500 (1969); G. G. Beznogikh, A. Buyak, K. I. Iovchev, L. F. Kirillova, P. K. Markov, B. A. Morozov, V. A. Nikitin, P.V. Nomokonov, M.G. Shafranova, V. A. Sviridov, Truong Bien, V. I. Zayachki, N.K. Zhidkov, L. S. Zolin, S. B. Nuruchev, and V. L. Solovianov, Phys. Letters 30B, 274 (1969).

4. K. J. Foley, R. S. Jones, S. J. Lindenbaum, W. A. Love, S. Ozaki, E. D. Platner, C. A. Quarles, and E. H. Willen, Phys. Rev. Letters 19, 330 (1967); 857 (1967).

5. J. V. Allaby, Yu. B. Bushnin, S. P. Denisov, A. N. Diddens, R. W. Robinson, S. V. Donskov, G. Giacomelli, Yu. P. Gorin, A. Klovning, A. I. Petrukhin, Yu. D. Prokoshkin, R. S. Shuvalov, C. A. Stahlbrandt, and D. A. Stoyanova, Physics Letters 30B, 500 (1969).

6. S. J. Lindenbaum, "Experimental Verification of Dispersion Theory and High Energy Scattering", Invited paper to be published in the Proceedings of the Symposium on the Past Decade in Particle Theory, University of Austin, April 14-17, 1970.

FIGURE CAPTIONS

Figure 1: The experimental arrangement for elastic "diffraction" scattering. (See text for description.)

Figure 2a: A plot of $\pi^{\pm}$-p total cross sections* versus 1/P. The solid (closed) points represent our group's BNL data. The open points represent the Serpukhov data. As is well known, the Serpukhov data imply that the total cross sections stop falling and level out, and perhaps even rise. These qualitative changes in behavior were accommodated in Regge fits by introducing cuts. The solid lines shown are a monotomically decreasing five parameter polynomial fit of the type we used in our prior publications. Since the absolute scale of the Serpukhov data is stated to be uncertain to ± 1%, we have tried to accommodate all the data to our previous type of fit by lowering the Serpukhov data by the scale error. The fit is reasonable except for the last three high energy points. However, the scatter of the data imply enough uncertainty so that we have not concluded that a change of behavior is established beyond "reasonable doubt". It is quite clear that much greater accuracy and a wide energy inverval (such as that available at NAL) are highly desirable to settle these questions.

---

* In the Serpukhov data the π^{+}+p cross sections were deduced from the relations

$$\sigma(\pi^{+}+p) = \sigma(\pi^{-}+n) = \sigma(\pi^{-}+d) - \sigma(\pi^{-}+p) + \Delta$$

where Δ is the "shadowing etc. correction".

Figure 2b: A plot of p-p and $\bar{p}$-p total cross sections versus 1/P. In this case a simple five parameter polynomial fit with a monotomically decreasing cross section represents the data well.

Figure 3: Experimental arrangement for total cross section measurements. (See text for description.

TABLE I

ANGULAR RESOLUTION OF THE HODOSCOPES

1) Incident Particle Hodoscopes, H1 + H2 (For elastic scattering and total cross sections)

Geometrical

$\Delta\theta_x = \Delta\theta_y = 0.05$ mrad (HWHM)

Multiple Scattering

θ_{ms} varies from .07 mrad at 30 GeV/c incident momentum to .01 mrad at 200 GeV/c.

2a) Scattered Particle Hodoscope, HS - (For elastic scattering)

Geometrical

The hodoscope is moved to hold $P_{inc}\Delta\theta$ constant.

At 200 GeV/c $\Delta\theta = \pm 0.04$ mrad.

At 30 GeV/c $\Delta\theta = \pm 0.3$ mrad.

$\Delta\varphi$ is a function of t and varies from $\pm$ 16 mrad at $|t| = 0.2$ $(GeV/c)^2$ to $\pm$ 8 mrad at $|t| = 1$ $(GeV/c)^2$.

Multiple Scattering

θ_{ms} varies from 0.13 mrad at 30 GeV/c to .02 mrad at 200 GeV/c.

2b) Scattered Particle Hodoscope HS - (For total cross sections)

Geometrical

a) 50-200 GeV/c

$\Delta\theta_x = \Delta\theta_y = \pm 0.04$ mrad, $\Delta\theta = \pm 0.06$ mrad.

TABLE I
(Cont'd.)

β) 20-80 GeV/c

$\Delta\theta_x = \Delta\theta_y = \pm 0.08$ mrad, $\Delta\theta = \pm 0.11$ mrad.

Multiple Scattering

θ_{ms} varies from .05 mrad at 200 GeV/c to 0.5 mrad at 20 GeV/c.

3) Recoil Particle Detectors HT + HR - (For Elastic Scattering)

Geometrical.

$\Delta\theta = \Delta\phi = \pm 5$ mrad

Multiple Scattering

θ_{ms} varies from 20 mrad at $|t| = 0.1\ (\mathrm{GeV/c})^2$ to 3 mrad at $|t| = 1(\mathrm{GeV/c})^2$.

TABLE II

MAXIMUM INCIDENT MOMENTUM FOR

FULL DATA TAKING RATE (Total Cross Sections)

WITH 200 GEV PROTON BEAM*

P	200 GeV/c
π^-	~ 150 (GeV/c)
π^+	150 GeV/c
K^-	130 GeV/c
K^+	120 GeV/c
$\bar{P}$	~ 80 GeV/c

*These estimates are based on the 1969 NAL Summer Study report by D. Reeder and J. MacLachlan, Report Number SS-41.

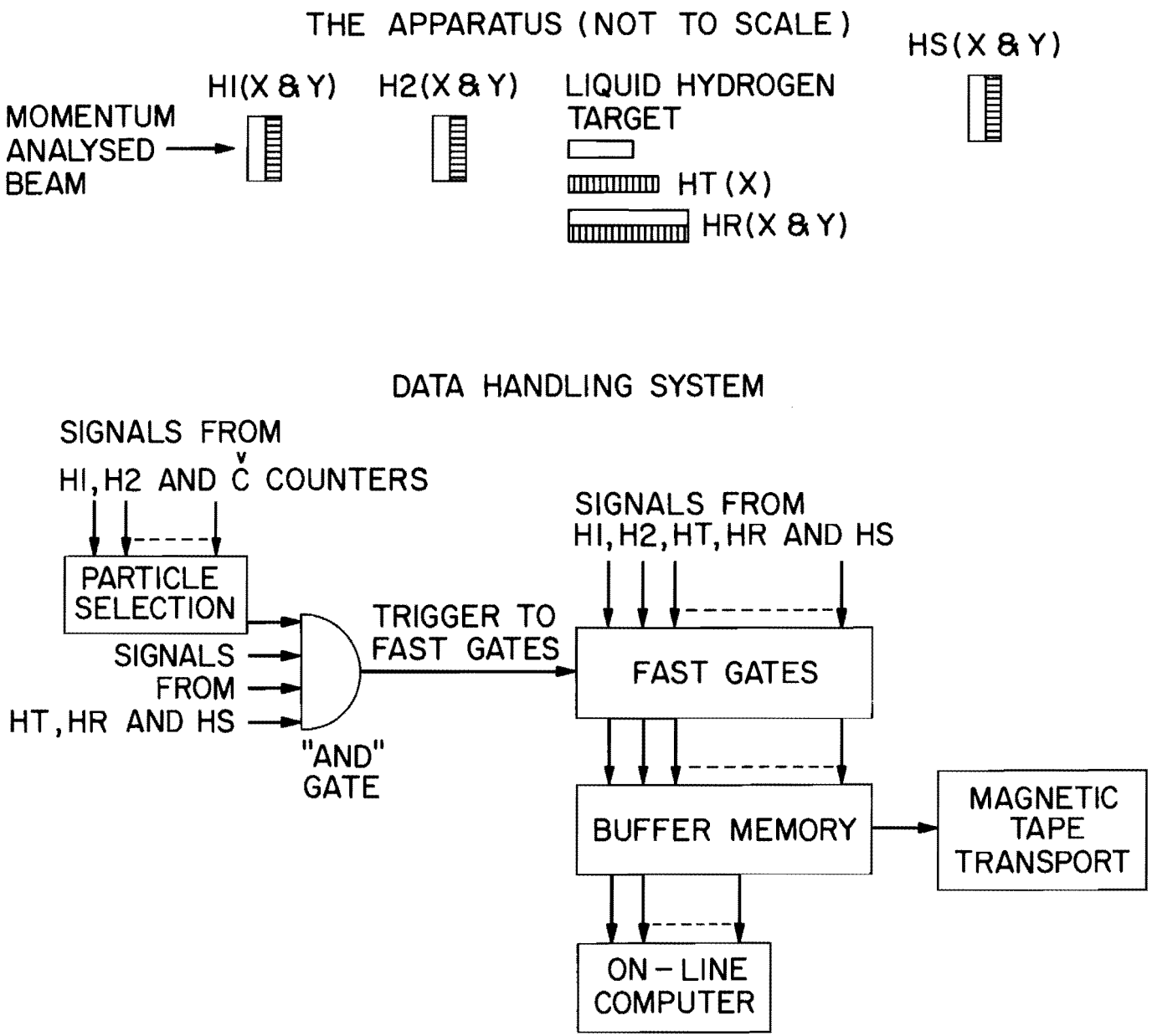

FIGURE I: The experimental arrangement for elastic "diffraction" scattering (See text for description).

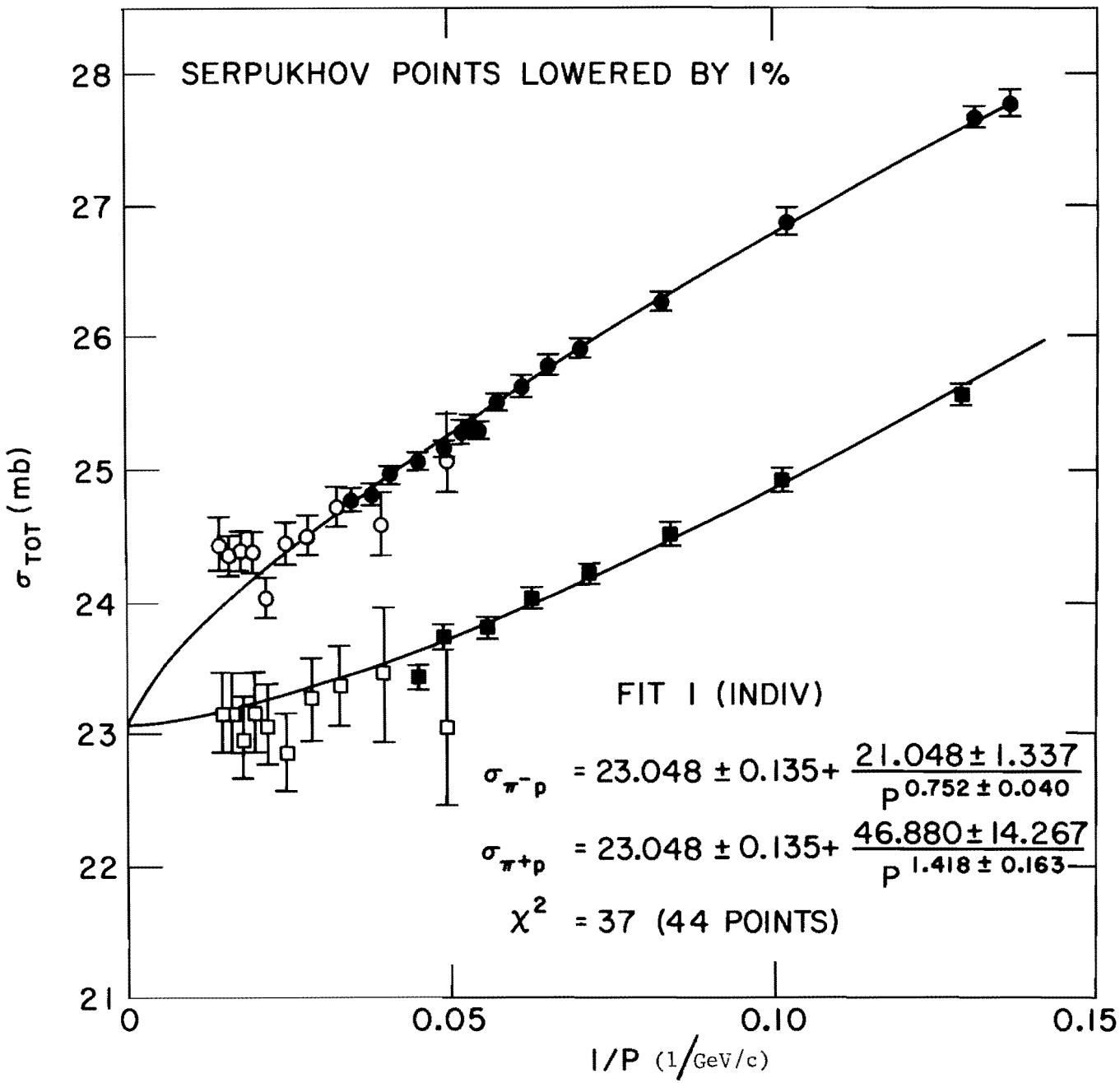
SERPUKHOV POINTS LOWERED BY 1%
FIT I (INDIV)
$\sigma_{\pi^- p} = 23.048 \pm 0.135 + \frac{21.048 \pm 1.337}{P^{0.752 \pm 0.040}}$
$\sigma_{\pi^+ p} = 23.048 \pm 0.135 + \frac{46.880 \pm 14.267}{P^{1.418 \pm 0.163}}$
$\chi^2 = 37$ (44 POINTS)
σ_{TOT} (mb)
28
27
26
25
24
23
22
21
0
0.05
0.10
0.15
1/P (1/GeV/c)

FIGURE 2(a)

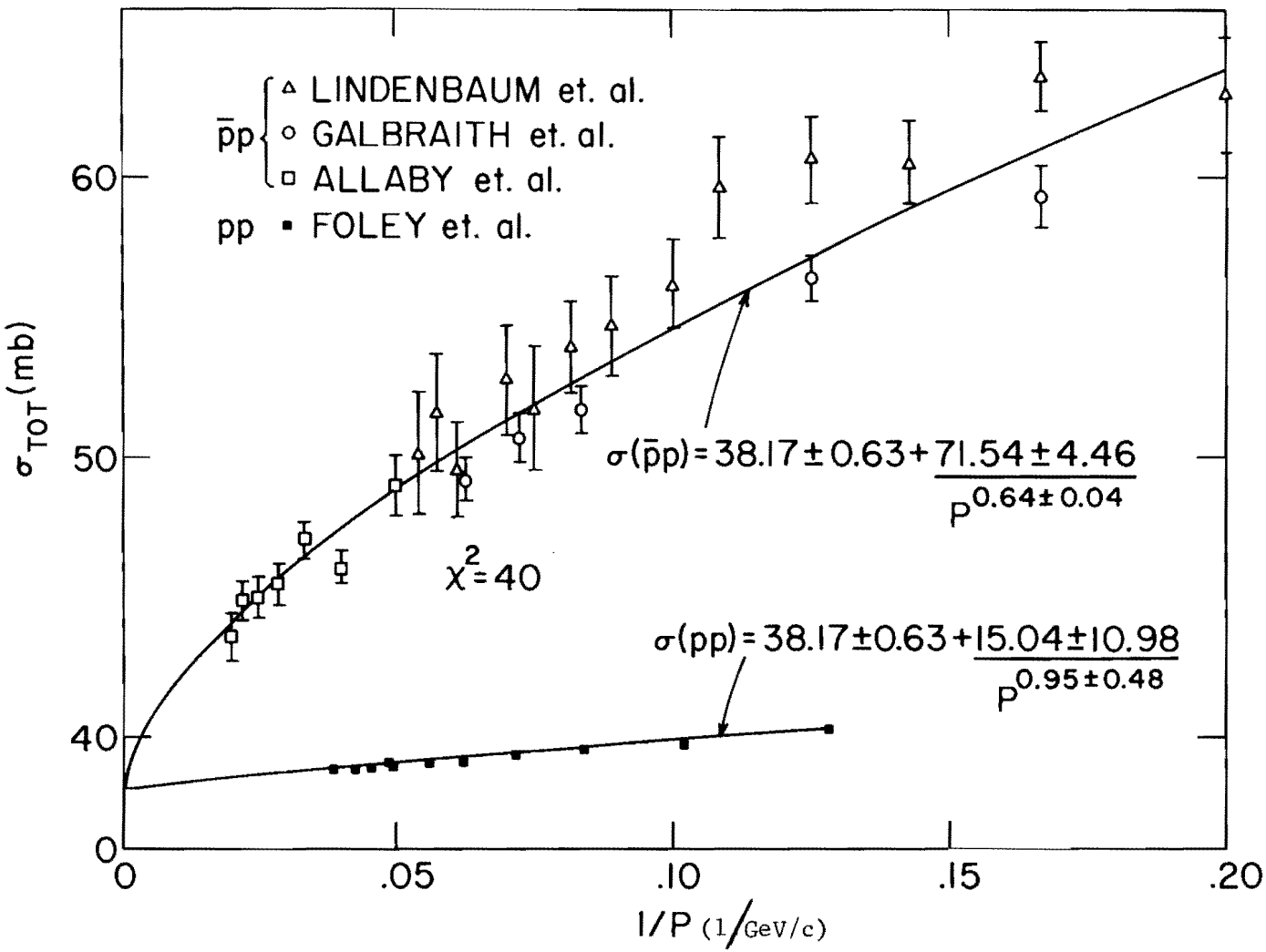
$\bar{p}p$
△ LINDENBAUM et. al.
○ GALBRAITH et. al.
□ ALLABY et. al.
pp ▪ FOLEY et. al.
$\sigma(\bar{p}p) = 38.17 \pm 0.63 + \frac{71.54 \pm 4.46}{P^{0.64 \pm 0.04}}$
$\chi^2 = 40$
$\sigma(pp) = 38.17 \pm 0.63 + \frac{15.04 \pm 10.98}{P^{0.95 \pm 0.48}}$
σ_{TOT} (mb)
0
40
50
60
0
.05
.10
.15
.20
1/P (1/GeV/c)

FIGURE 2(b)

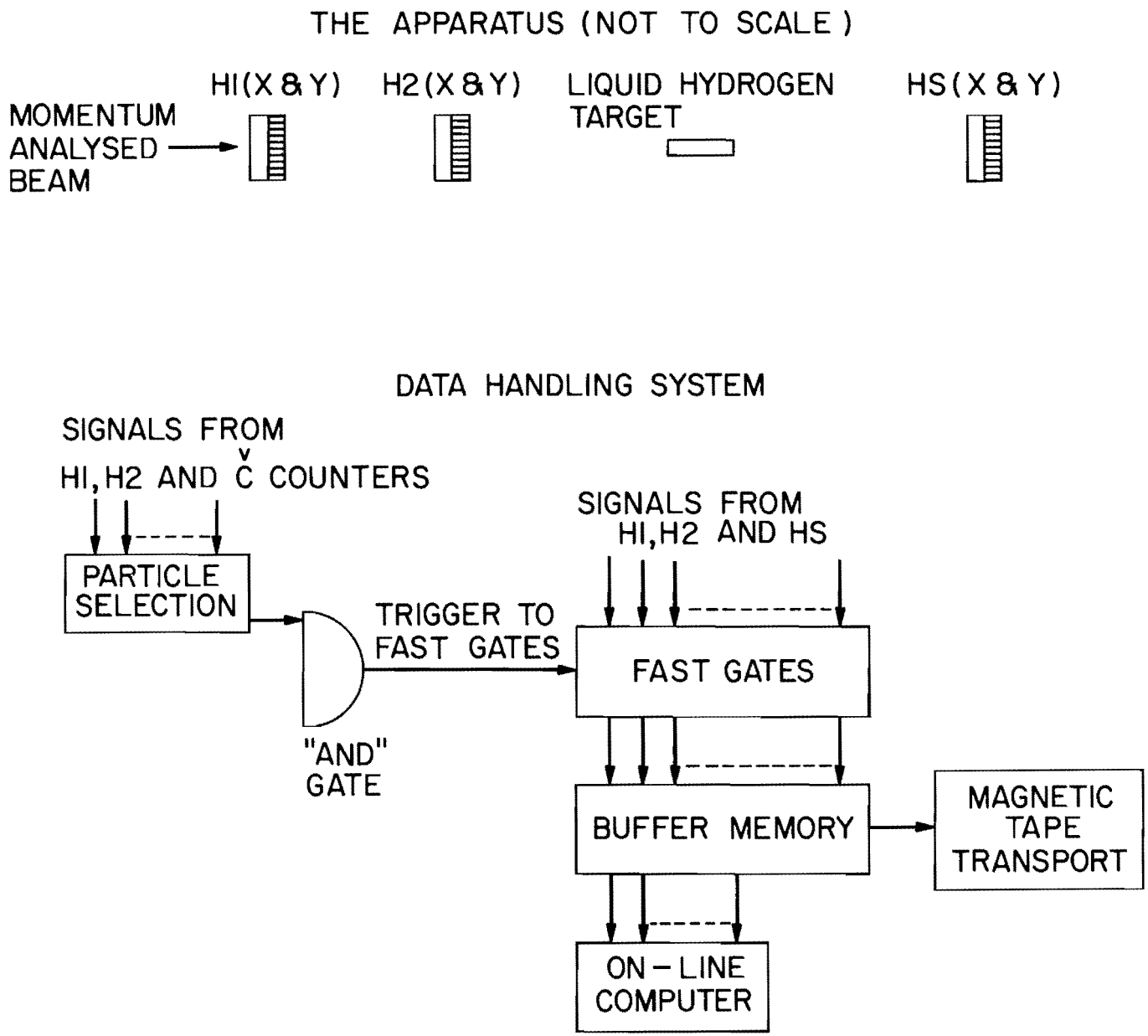

FIGURE 3: Experimental arrangement (See text for description).

and confirmed consistency with the FDR for p-p and $\bar{p}$-p. They also have, in conjunction with the FDR, served as a crystal ball to predict where asymptotic theorems, as for example the Pomeranchuk theorem, would be expected to come true.

Such an investigation at NAL energies would be of considerable interest to the scientific community.

For the present we consider this as a likely later step in our initially proposed programs. Of course, we will be pleased to consider collaborating with NAL staff members for our mutual interests and benefit.