NAL Proposal No. 50 (Revised)

LARGE ANGLE $\pi^{\pm}$-P, $K^{\pm}$-P, and $P^{\pm}$-P ELASTIC SCATTERING AT HIGH ENERGIES

Revised November 15, 1970

Abstract:

The main purpose of this experiment is to establish the asymptotic behavior of hadron-hadron elastic scattering. Wire chambers and counters will be used to measure the angle and momentum of both the scattered particle and the recoil proton. The high-energy-high-intensity secondary beam would be used to measure π^--P, π^+-P, K^+-P, K^--P, $\bar{P}$-P, and P-P at 50 and 80 GeV/c in the momentum transfer region $1<-t<10$ GeV^2 and π^--P at 120 GeV/c. Lower intensity runs would be made to measure K^+-P, K^--P, and $\bar{P}$-P in the region $0.1<-t<2$ GeV^2. Also P-P would be measured at 200 GeV/c in the region $1<-t<15$ GeV^2.

Names of Experimenters:

P. Mazur, J. Orear, J. Peoples, J. Klems	Cornell University
R. Rubinstein	BNL
M. I. Adamovich, P. S. Baranov	Lebedev Physical Institute

Correspondent: J. Orear
November 15, 1970

II. Physics Justification

The total cross section results from Serpukhov have shown that asymptopia will not be reached at NAL via total cross sections, i.e., particle and antiparticle total cross sections will not be equal at 500 GeV/c. However, there is a good chance that asymptopia can be reached at NAL via large angle elastic scattering.[1] By asymptopia, not only do we mean that the π^+-P and π^--P angular distributions will be the same, but also that $d\sigma/dt$ will no longer be a function of the beam momentum. So far π-P large angle scattering has only been measured up to 14 GeV/c.[2] But already there are indications that one is approaching this kind of asymptotic limit. Recently large angle π^+-P has been measured at 5 GeV/c[3] and found to contain the same kind of sharp dip at $-t \sim 3$ GeV^2 that was found in π^--P. In Fig. 1 the new 5 GeV/c π^+-P results are compared with the Cornell-BNL 5.9 GeV/c π^--P results. In addition there are preliminary results from a large angle charge exchange experiment at ANL that show no sign of a dip at $-t \sim 3$ GeV^2.[4] Since Pomeron exchange (or its equivalent) is strictly forbidden in charge exchange scattering, it appears that the dip is associated with Pomeron exchange or some diffraction mechanism. Not only do the π^+-P and π^--P angular distributions seem to be approaching each other, but the rapid decrease with energy of $d\sigma/dt$ at fixed t seems to be dropping off at the higher energies. This is seen

in Fig. 2 where log $d\sigma/dt$ at $-t = 2.0$ and 3.5 GeV^2 is plotted vs. logS. A power law dependence would be given by a straight line with a slope of $(2\ \alpha_{eff}-2)$. We see that α_{eff} is becoming more positive with increasing energy. (At asymptopia $\alpha_{eff}=1$, i.e., the curves in Fig. 2 become flat.) We see from Fig. 2 that asymptopia could possibly set in at beam momenta as low as 20 GeV/c.

Several groups of theorists have proposed that P-P elastic scattering is related to the proton form factor obtained from e-P scattering. All these theorists are forced to conclude that the 30 GeV/c P-P cross section curve must be close to the asymptotic limit.[1] Another question concerning P-P elastic scattering is the large difference in $d\sigma/dt$ for $\bar{P}$-P and P-P. These differential cross sections should approach each other at high energy.

Another relatively new phenomenon in large angle scattering is the appearance of sharp dips and kinks in the angular distributions as one goes to higher energy. Such sharp dips in the asymptotic diffraction curve were predicted by Chou and Yang[5] before such structures in the large angle region were found. We have already discussed the spectacular dip in π-P at $t \sim -3$ GeV^2. Fig. 3 shows the kink in P-P scattering at $t \sim -1.4$ GeV^2 as a function of energy. This kink suddenly appears around 10 GeV/c and grows with increasing energy. K^+-P might be expected to show similar behavior since it is the only other system uncomplicated by direct channel resonances. Similar structures that are predicted for higher t-values may be filled in by the energy

dependent contribution to elastic scattering. In order to see such structures one must go to higher energies where the energy dependent contribution has faded away.[1]

The technique proposed here is particularly well suited for revealing sharp structures in angular distributions. At $-t \sim 3$ GeV^2, the rms resolution in t is ~ 0.025 GeV^2. Also, since the entire angular region is measured simultaneously, there is no point-to-point relative error. By comparison, the focusing single spectrometer system still used by CERN,[6] has an intrinsic point to point "jitter" of ±4%. In their paper the CERN group says, "These values are much bigger than the statistical errors, and are determined from the reproducibility of the measurements."

An important question of current interest is the asymptotic behavior of the forward diffraction peaks. For example, theorists have pointed out that if the total cross sections observed at Serpukhov are the asymptotic values, then all forward peaks must shrink with energy as $(\log S)^2$. However, in the 20 GeV region the $\bar{P}$-P forward peak is anti-shrinking (getting wider). A crucial test of these predictions would be observation of a crossover in the energy dependence of the width of the $\bar{P}$-P forward peak. We plan to make short runs at reduced beam intensity to measure the K^+, K^-, and $\bar{P}$-P elastic scattering in the region $0.1<-t<2$ GeV^2. Our results will supplement those of Exp. 7 where the $\pi^{\pm}$-P and P-P forward peaks are measured as a function of energy.

a. The Forward Spectrometer

As shown in Fig. 4, the forward spectrometer consists of two ANL BM-109's or their equivalent. The 8" x 24" aperture subtends a solid angle of 1000 μsr. The 80 GeV/c scattered pions are deflected by 28 mr away from the beam (a bending power of 130 GeV/c-degrees). Hodoscopes H_1 and H_2 (or proportional wire chambers W_1 and W_2) and proportional wire chambers W_3 and W_4 permit an rms angle measurement ±0.08 mr (compared to ±0.8 mr spread in the incoming beam), and an rms momentum determination of ±0.4% (compared to ±2.5% momentum spread in the incoming beam). This is assuming 1 mm wire spacing in W_1 and W_2, and 2 mm spacing in W_3 and W_4. Clearly, 2 mm spacing would be adequate for W_1 and W_2, but we have agreed with Exp. 61 to use 1 mm spacing for these small chambers. S_1S_2 make up a bank of 15 side by side trigger telescopes. In addition, pulses from groups of wires in W_1, W_2, W_5, W_6, and W_7 could be used in the fast logic. The coincidence $H_1 \cdot H_2 \cdot S_1 \cdot S_2$ requires that the forward particle have a transverse momentum greater than ~1 GeV/c which for most forward peaks is down by e^{-10}. For low cross section running, the lower t-value telescopes will be turned off, greatly reducing the trigger rate. The typical trigger telescope has a momentum resolution of ±10%. The hodoscopes H_1 and H_2 consist of vertical scintillator fingers 2 mm wide. The beam center passes about 1.7 inches from the nearest finger in H_1 (at an angle of 12 mr from the target). The instantaneous interaction rate in the

target may be as high as ~5×10^7 sec^{-1}. The rate of secondaries passing through H_1 should be significantly less than this; hence the rate in each finger should be less than 10^6 sec^{-1}. H_1 consists of about 15 fingers. In the case of double H_1H_2 events, only one possibility will match up with W_3W_4 which will have much lower rates. Actually H_1 and H_2 offer redundant information and are not absolutely necessary. By using a 2 cm diameter hydrogen target, the rms vertex determination is ±5 mm using the recoil proton track. This vertex determination along with W_3 and W_4 give an rms momentum determination of ±2% on the scattered particle.

Fig. 5 is a view of the exit port of M_3 looking downstream. In the region of the t = -3 GeV^2 dip the azimuth bite is $\Delta\phi$ = 45°. However in this region of t the azimuth bite of the proton recoil magnet is $\Delta\phi$ = 25°. At -t = 7 GeV^2, the two apertures are matched and $\Delta\phi$ = 30°. The gas Cerenkov counters C_1 and C_2 are the same as used in Exp. 61.

b. <u>The Recoil Proton Detector</u>

W_5, W_6, and W_7 are proportional wire chambers with 2 mm wire spacing. The system as shown in Fig. 4 has an rms angle measuring accuracy of $\Delta\theta_p$ = ±2 mr and an rms momentum resolution of $\frac{\Delta P}{P}$ =±1.5% at -t = 3 GeV^2. After taking into account the ±0.8 mr divergence of the incoming beam, the rms resolution in t per event will be t = ±.025 GeV^2 at -t = 3 GeV^2. At -t = 0.1 GeV^2 the resolution in t becomes ±.002 GeV^2.

The main source of particles giving pulses in W_5 will be recoil protons from small angle elastic scatterings. This is because the total elastic π-P cross section is 4 mb, while the sum of all the diffractive-like isobar total cross sections is 0.4 mb.[9] According to reference 9, the background under the isobar peaks is dropping fast with increasing energy, while the diffractive-like isobar peaks are energy independent. Taking into account multiplicity in isobar decay and absorption of elastic recoil protons, we estimate that W_5 will receive comparable numbers of particles from elastic and inelastic processes. The chance that a beam particle elastically scatter and have its recoil proton pointing in the direction of W_5 is $\sim 5 \times 10^{-4}$. Over 80% of these can be absorbed before reaching W_5, so the rate in W_5 should be $\sim 10^6$ particles/sec for the highest intensity runs taking into account the inelastic processes. In the large t P-P run, the rate in W_5 might possibly be too high even for a proportional chamber. We plan to provide a scintillator hodoscope H_3 to cover this contingency.

Actually, the P-P experiment would probably still work without either W_5 or H_3 by dropping one constraint, since the x-coordinates in W_6 and W_7 are uniquely determined by Z_t (target length coordinate) and θ_p. Inverting the relations $X_6 = X_6(Z_t, \theta_p)$ and $X_7 = X_7(Z_t, \theta_p)$ gives $\theta_p = \theta_p(X_6, X_7)$ via the angle-momentum relation for elastic scattering. Even though the magnet would be fully excited, removing W_5 or H_3 amounts to dropping the momentum constraint for the recoil proton. The rejection of inelastic background events in this situation is discussed in the August 31, 1970 addendum to this proposal.

c. <u>The Beam</u>

In order to reach the lowest possible cross sections, one should use the highest intensity beam possible, a long target,

and large solid angle. We plan to use the high-energy-high-intensity beam in Area 2 at full intensity (full momentum bite of $\Delta P/P = 5\%$). For 80 GeV/c pions, the instantaneous rates will be $\sim 5 \times 10^8$ particles/sec which precludes counting directly in the beam. We plan to use a small monitor telescope looking at elastic recoil protons (at low t value). Also the beam will be independently monitored by recording $S_3 \cdot H_3$ coincidences. The relatively poor momentum and angle resolution of this beam hardly affects the resolution in t, since at these energies the recoil proton angle is independent of the beam momentum: $\sin\theta_p = (t/4M^2+1)^{-1/2}$. As discussed in the previous section, the t resolution is determined by the proton angle measurement, and at $t = -3\ \mathrm{GeV}^2$ it should be $\Delta t = \pm 0.025\ \mathrm{GeV}^2$.

The main error in determination of θ_π, the pion lab scattering angle, will be the beam divergence of ± 0.8 mr. At fixed t, a $\Delta P/P = \pm .025$ momentum spread in the beam gives $\Delta\theta_\pi = \pm 0.5$ mr. Although θ_π is not used to determine the t-value of the event, it is useful in rejecting inelastic background.

In the high intensity running (high t region) particle identification will not be attempted in the beam. However, the scattered particles leaving M_3 will be low intensity so that threshold Cerenkov counters could be used. Gas Cerenkov counter C_1 will give light (~30 photons/pion) for 80 GeV/c pions, but no light for kaons or protons. Counter C_2 will give light for pions and kaons, but not for protons. These pulses along with the trigger

will identify whether the scattered particle is a pion, kaon, or proton. In π^+-P scattering, $d\sigma/dt$ in the region of the t = -3 dip may be 2 or 3 orders of magnitude smaller than the corresponding cross section for P-P scattering. Since the P/π^+ ratio at 80 GeV/c is expected to be ~1,[7] the C_1, C_2 redundancy should reject protons from elastic P-P by a factor of ~10^4 or better. At 10 GeV/c the K^--P and $\bar{P}$-P angular distributions are similar to the π^--P.[2] If this is still true at 80 GeV/c, we would expect C_1 and C_2 to do a reasonably good job in determining the K-P and $\bar{P}$-P angular distribution at 80 GeV/c. However, for the 120 GeV/c π^- run, we do not propose to separate K^- from π^- using Cerenkov counters. Since at this momentum the K^-/π^- ratio should be ~10^{-2}, the K^--P cross section would have to be two orders of magnitude larger than the π^--P to cause trouble. If this unlikely situation happens to occur, we will know it from the 80 GeV/c results.

Note that the high intensity beam passes through our apparatus relatively unaffected. Only 10% of the beam interacts in the 30 inch liquid hydrogen target and the multiple scattering is negligible (.05 mr). The beam could be refocussed for another user downstream from our experiment. Both experiments could run simultaneously at full intensity.

d. Estimated Rates

If we make the most pessimistic assumption that the π-P cross section continues to drop off as P_{lab}^{-4}(α_{eff} = -1 as found

at 10 GeV/c), then at 80 GeV/c and at $-t = 6\ \mathrm{GeV}^2$, $d\sigma/dt \approx 5\times10^{-36}\mathrm{cm}^2/\mathrm{GeV}^2$ which is a factor of 4000 times smaller than the value at 10 GeV/c. Then the number of events in the bin $-t = (6.0\pm0.5)\ \mathrm{GeV}^2$ for a 100 hr run would be

$$N_{\pi P} = N_\pi \eta_H \frac{d\sigma}{dt} \Delta t \frac{\Delta\phi}{2\pi}$$

$$N_\pi = 4 \times 10^8 \text{ pions/sec} \times 3.6\times10^5 \text{ sec/100 hr} = 1.4\times10^{14}$$

$$\eta_H = 3.2\times10^{24} \text{ protons/cm}^2$$

$$\Delta t = 1\ \mathrm{GeV}^2$$

$$\frac{\Delta\phi}{2\pi} = 7.8\times10^{-2}$$

$$N_{\pi P} = 175 \text{ events/100 hr.}$$

The figure of 4×10^8 pions/sec or 2×10^9 per pulse for 80 GeV/c is obtained from the June 30, 1970 memo of Ed Bleser entitled "Area II Beams" assuming a 5% momentum bite and a beam of 2×10^{13} per pulse.

A similar calculation for the rate at the bottom of the $t = -3$ dip gives ~50 events for a 100 hr run also assuming the most pessimistic energy dependence of p^{-4} for a bin width of $\pm0.1\ \mathrm{GeV}^2$.

The pessimistic assumption for P-P elastic scattering is to assume the cross section keeps dropping off as $\frac{d\sigma}{d\omega} = \frac{600}{S} e^{-\frac{P_\perp}{.16}} \frac{\mathrm{mb}}{\mathrm{sr}}$.(8) For 200 GeV/c protons at $t = -10\ \mathrm{GeV}^2$ this formula gives $d\sigma/dt = 10^{-37}\mathrm{cm}^2/\mathrm{GeV}^2$. For a proton beam of $2\times10^9\mathrm{sec}^{-1}$ this gives ~100 events per 100 hrs for the bin $-t = (10\pm1)\ \mathrm{GeV}^2$.

e. Background

For a more detailed discussion of inelastic background, see Addendum to Exp. 50, August 31, 1970. Nearly all inelastic events which emit a forward particle at a given θ_π will have the wrong P_π, the wrong θ_p, the wrong P_p, and the wrong ϕ_p. We have four independent chances to kill the background (a 4 constraint fit). The dynamical process which comes closest to fooling our system is $\pi^\pm+P\rightarrow\pi^\pm+N^{*+}$ followed by $N^{*+}\rightarrow\pi^\circ+P$. However it is known that such cross sections are no larger than the elastic cross section and that they decrease with t at least as fast as the elastic cross section.(9) Any process $\pi^\pm+P\rightarrow\pi^\pm+X$ where X has a missing mass up to M=2.9 GeV will survive the P_π cut. But all such processes combined have a total cross section only 3 times that of the elastic cross section at the same t value.(9) If one plots the number of events vs. (θ_p(measured) - θ_p(predicted)) the elastic peak will be ~±20 mr wide and the rms width of the (ϕ_p(measured) - ϕ_p(predicted)) peak will be ~10 mr. The probability that the decay proton from a typical N^* lie in both these peaks is ~10^{-2}. The conclusion is that isobar production might contribute at most a few percent background. The background can easily be determined from the above plots or from an overall Chi-squared plot. In the above discussion we have not yet invoked the P_p constraint. The addition of this constraint will reduce inelastic background by at least another order of magnitude.

f. Low Intensity Runs

We are proposing not only to measure large angle scattering, but to measure the widths of the forward diffraction peaks in K^-, K^+, and $\bar{P}$-P elastic scattering. Since $d\sigma/dt$ is so much larger in the forward region than in the large angle region, we can make these measurements at reduced beam intensity ($\sim 10^7$ particles/pulse). In this low intensity mode we would count particles in the beam with scintillation and cerenkov counters. Not only would we measure absolute differential cross sections, but also obtain simultaneous measurements of the ratios of K-P and $\bar{P}$-P cross sections to π-P. These ratios, along with the results of Exp. 7, would give an independent determination of the absolute cross sections.

The incident particles would be identified by means of the differential and threshold cerenkov counters in the parallel section of Beam 21 as discussed in the Oct. 9, 1970 Double Spectrometer Meeting at NAL.

Independent identification of particle type is provided by also using the two threshold cerenkov counters, C_1 and C_2, in the forward arm. The rates for K^--P and $\bar{P}$-P happen to be about the same at both 80 and 120 GeV/c. We estimate that a 5 hour run would give $\sim$70,000 events in the region $-t>0.1$ GeV^2 which is more than enough to determine the forward peak to 1% statistical accuracy. In order to improve statistical accuracy in the $-t \sim 1$ GeV^2 region we would plan to run for 10 hours at each energy and charge

and collect data for $-t<0.4$ GeV^2 for only 20% of each beam spill. In addition π-P data would be taken for about 1% of each beam spill. In this way all forward peaks would be measured together to ~1% accuracy.

Even though we would be getting dozens of events in the region $1.5<-t<2$ GeV^2 per 10 hour run, we would resist the temptation to improve statistics in this region by taking longer runs, since each hour of running in the high intensity mode is equivalent to ~100 hours of running in this low intensity mode. For the same reason we recommend that Exp. 7 not take extra beam time to improve statistics in the region $-t>1$ GeV^2. This region will be covered with much improved statistics using the high intensity mode along with proportional chamber detectors.

g. Time Estimates

We propose making the runs shown in Table I.

Table I

Reaction	t-Region	Running Time
Low Intensity Mode:		
80 GeV/c (K^+,P,π^+)	0.1-2 GeV^2	10 hrs.
80 GeV/c (K^-,π^-)	0.1-2	10
80 GeV/c $(\bar{P},\pi^-)$	0.1-2	10
120 GeV/c (K^+,P,π^+)	0.1-2	10
120 GeV/c (K^-,π^-)	0.1-2	10
120 GeV/c $(\bar{P},\pi^-)$	0.1-2	10

High Intensity Mode:

50 GeV/c (π^-,K^-,$\bar{P}$)	1-10 GeV^2	50 hrs.
50 GeV/c (π^+,K^+,P)	1-10	50
80 GeV/c (π^-,K^-,$\bar{P}$)	1-10	100
80 GeV/c (π^+,K^+,P)	1-10	100
120 GeV/c (π^-)	1-10	200
200 GeV/c (P)	1-15	200
	total	760 hrs.

The change-over from a low intensity to a high intensity mode would be quick. It would involve opening up the momentum slit, "turning off" counters in the beam and in the low t triggers, and removing high voltage from the low t region of chambers W_1 and W_2. Nothing would be moved.

The recoil magnet position is exactly the same as in Exp. 7. No magnet moves are required for any of the above runs.

h. The Double Arm Facility - Other Experiments

In cooperation with experiments 7, 61, and others, we offer to help design and construct equipment which will remain at NAL as part of a double arm, large aperture spectrometer facility which can do a series of experiments, some of which are listed in Table II.

Table II

1. Inclusive secondary production from π-P and P-P collisions.
2. Inclusive two particle (and 3 particle) secondary production to study 2-particle and 3-particle correlations.

3. Backward π-P elastic peaks.
4. Extension of π-P and P-P elastic scattering to 300 GeV/c region.
5. $\pi^- P \to K\Lambda$ and $\pi^+ P \to K\Sigma$ forward peaks.
6. Missing mass experiments.
7. Quark physics (assuming that quarks are found).

Items 2 and 3 on this list are of interest to members of our group and proposals may be forthcoming. By moving W_5 and W_6 so that they subtend angles from 90° to 170°, the backward peak in π^--P elastic scattering could be measured up to ~140 GeV/c. Here the energy dependence is expected to be a well-behaved power law $(\frac{d\sigma}{du})_0 \propto S^{2\alpha_0 - 2}$ where α_0 is the u = 0 intercept of the Δ-trajectory; i.e., $\alpha_\Delta = \alpha_0 + \alpha_0' u$. The rate of increase in slope of the π^--P backward peak yields the slope of the Δ-trajectory. In order to make a good determination of α_0' it is necessary to measure the slopes at widely spaced energies. At 80 GeV/c the slope should be a factor of two steeper than at 10 GeV/c. One could then determine α_0' to a few percent, whereas now it is not known for sure whether or not the backward peak is shrinking. Of all the forward and backward peaks in physics, the π^--P backward peak is perhaps the "cleanest" since no competing exchange amplitudes are expected. At 80 GeV/c $\frac{d\sigma}{du}$ at u=0 would be ~2×10^{-32} cm^2/GeV^2. For the bin -u = (0.3±.05) GeV^2, we estimate about 5,000 events for a 50 hr run.

Not only can forward diffraction peaks be studied down to $-t \approx 0.05$ GeV^2, but other forward reactions as well. In terms of solid angles and detectors, this 1000 μsr system would be an NAL counterpart of the present "double V" facility of the BNL Lindenbaum group. Certainly the proportional chambers are ideal for double track detection. One should be able to measure $\pi^- P \to K^o + (\Lambda^o$ or $\Sigma^o)$ at 80 GeV/c up to $-t \sim 2$ GeV^2 without adding a large aperture magnet to the vertex detector. At 14 GeV/c and at $-t = 1.4$ GeV^2, $\frac{d\sigma}{dt}$ for the reaction $\pi^+ P \to K^+ \Sigma^+$ is only an order of magnitude lower than elastic scattering.[12]

IV. Apparatus

Some joint decisions on apparatus were made at the Oct. 9 Double Spectrometer Meeting. The 3 magnets and PDP-15 were decided on. As the software progresses the PDP-15 would be on-line to a PDP-10. Fortunately, our cross sections and data taking rates are so low that we could get by with the PDP-15 alone, along with a "bicycle link" to a central computer for batch processing.

Proportional wire chambers have been developed and used at Cornell.[13] Our group has made extensive use of this experience to develop the proportional wire chambers that we propose to use for this experiment. At the Oct. 9 meeting we were pleased to learn that our design is very similar to that of Exp. 61 and also

of Sippack at Nevis. We indicated at the Oct. 9 meeting that if this experiment is approved, we will work together with the Exp. 61 people and NAL to come up with a "standardized" system for NAL proportional wire chambers. There would be financial advantages to making a joint order of the wire chamber electronics. Table III lists the sizes of the 7 sets of wire planes which we propose. These same wire planes could also do Exp. 61. However, the cost is not so much in the wire planes themselves, but the electronics into which the wire chambers are plugged. So if Exp. 50 and 61 should prefer different sizes for some of the planes, the additional cost would be negligible. Any user of this facility could bring his own inexpensive planes to plug into the expensive NAL readout electronics.

We are planning to use the same gas cerenkov counters as Exp. 61 for C_1 and C_2 and are prepared to help with the construction. We would supply our own "trigger counters" and hodoscopes. Some of these counters already exist as part of our Exp. 324 on the AGS. This AGS experiment is a scaled down version of this NAL proposal to run on 23 GeV/c pions rather than 120 GeV/c.

Table III Proportional Wire Chambers

	Size	No. of Wires
W1(x)	5"x3" (horizontal x vertical)	120
W2 (x,y)	10x6	250, 150
W3 (x,y,u)	20x8	250, 100, 250
W4 (x,y,v)	30x12	375, 150, 375
W5 (x,y)	35x12	440, 150
W6 (x,y,u)	55x30	690, 375, 690
W7 (x,y,v)	60x35	750, 440, 750

References

1. For various theoretical approaches to large angle scattering see the review article of C.B. Chiu, R.M.P. 41, 640 (1969). Many of the authors reviewed here predict an energy independent $d\sigma/dt$ above a certain "asymptotic" energy.
2. Owen, et al., Phys. Rev. 181, 1794 (1969).
3. Rust, et al., Phys. Rev. Letters 24, (1970).
4. W.R. Frisken, private communication.
5. Chou and Yang, Phys. Rev. Letters 20, 1213 (1968).
6. Allaby, et al., Physics Letters 28B, 67 (1968).
7. NAL 1969 Summer Study I, pages 50 and 400.
8. Orear, Physics Letters 13, 190 (1964).
9. Foley, et al., Phys. Rev. Letters 19, 397 (1967); and Allaby, et al., Physics Letters 28B, 229 (1968); Anderson et al, P.R.L. 16, 855 (1966) and P.R.L. 25, 699 (1970).
10. NAL Summer Study I, 397 (Cocconi) (1969).
11. A.D. Krisch suggests that at high $p_\perp$, the drop off of secondaries will be even faster; e.g., it will go as $e^{-ap_\perp^2}$.
12. Preliminary Stony Brook results, page 75 of "High Energy Collisions, Stony Brook, 1969."
13. Andrews, et al, Cornell University CLNS-121, August 1970

Figure Captions

Fig. 1. The 5 GeV/c π^+-P data of Ref. 3 have been connected by a smooth curve. The 5.9 and 9.7 GeV/c π^--P points are from Ref. 2.

Fig. 2. The log of $d\sigma/dt$ for π^--P elastic scattering plotted vs. the log of P_π, the beam momentum, for $-t = 2.0$ and 3.5 GeV^2. Note the decreasing slope at high beam momenta. If the slope becomes zero, $\frac{d\sigma}{dt}$ becomes energy independent.

Fig. 3. $d\sigma/d\omega$ plotted vs. $p_\perp$ for P-P elastic scattering using results of Ref. 6.

Fig. 4 and 5. Layout for the 80 GeV/c runs. H_1, H_2 and H_3 are hodoscopes to measure horizontal positions. W_1-W_7 are proportional wire chambers. C_1 and C_2 are threshold gas Cerenkov counters.

Fig. 6. Exit port of forward magnets looking downstream. The t-value "contours" are for 80 GeV/c scattered particles.

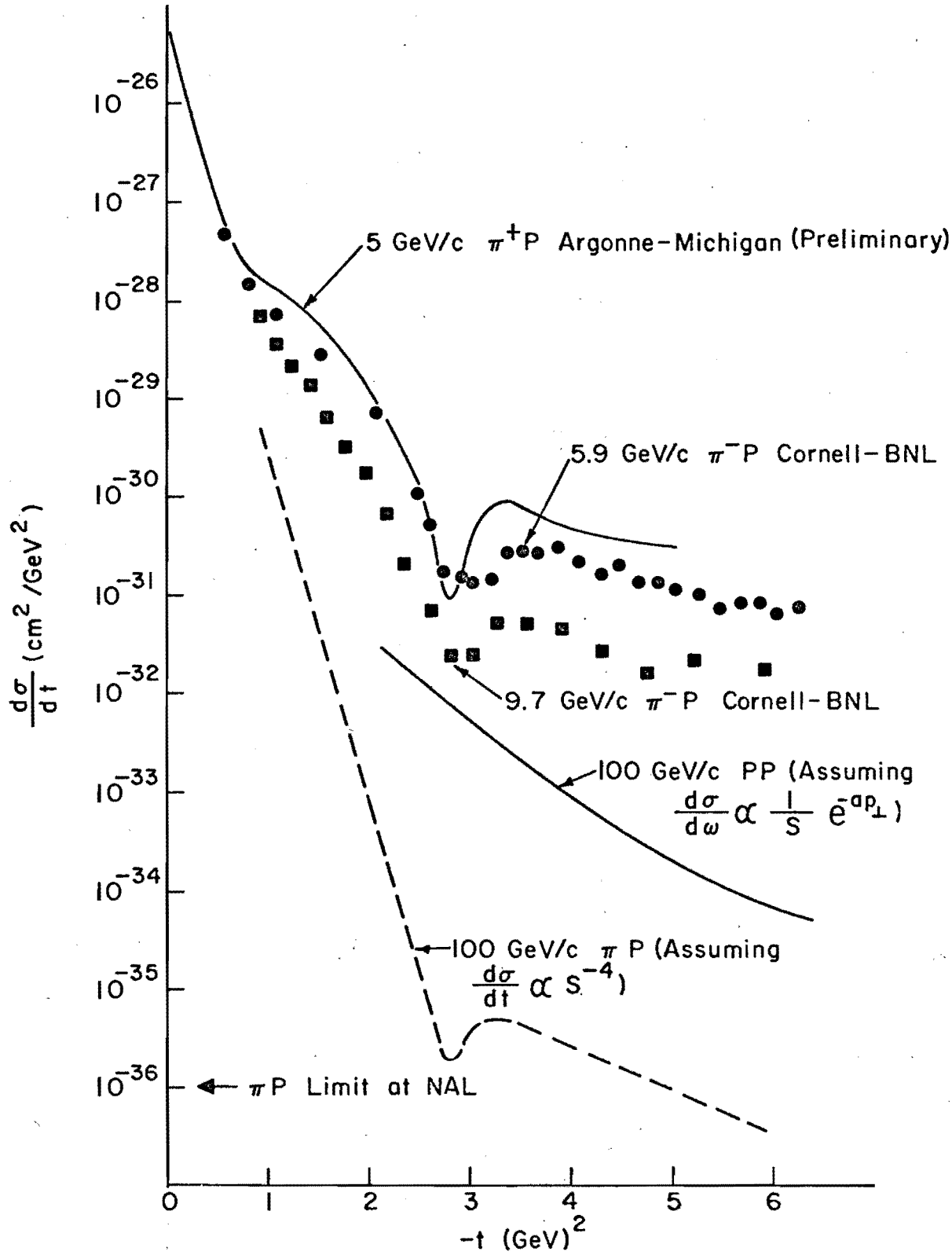
5 GeV/c π^+P Argonne-Michigan (Preliminary)
5.9 GeV/c π^-P Cornell-BNL
9.7 GeV/c π^-P Cornell-BNL
100 GeV/c PP (Assuming $\frac{d\sigma}{d\omega} \propto \frac{1}{S} e^{-ap_\perp}$)
100 GeV/c πP (Assuming $\frac{d\sigma}{dt} \propto S^{-4}$)
πP Limit at NAL
$\frac{d\sigma}{dt}$ (cm^2/GeV^2)
10^{-26}
10^{-27}
10^{-28}
10^{-29}
10^{-30}
10^{-31}
10^{-32}
10^{-33}
10^{-34}
10^{-35}
10^{-36}
0
1
2
3
4
5
6
$-t$ (GeV)^2

Figure 1

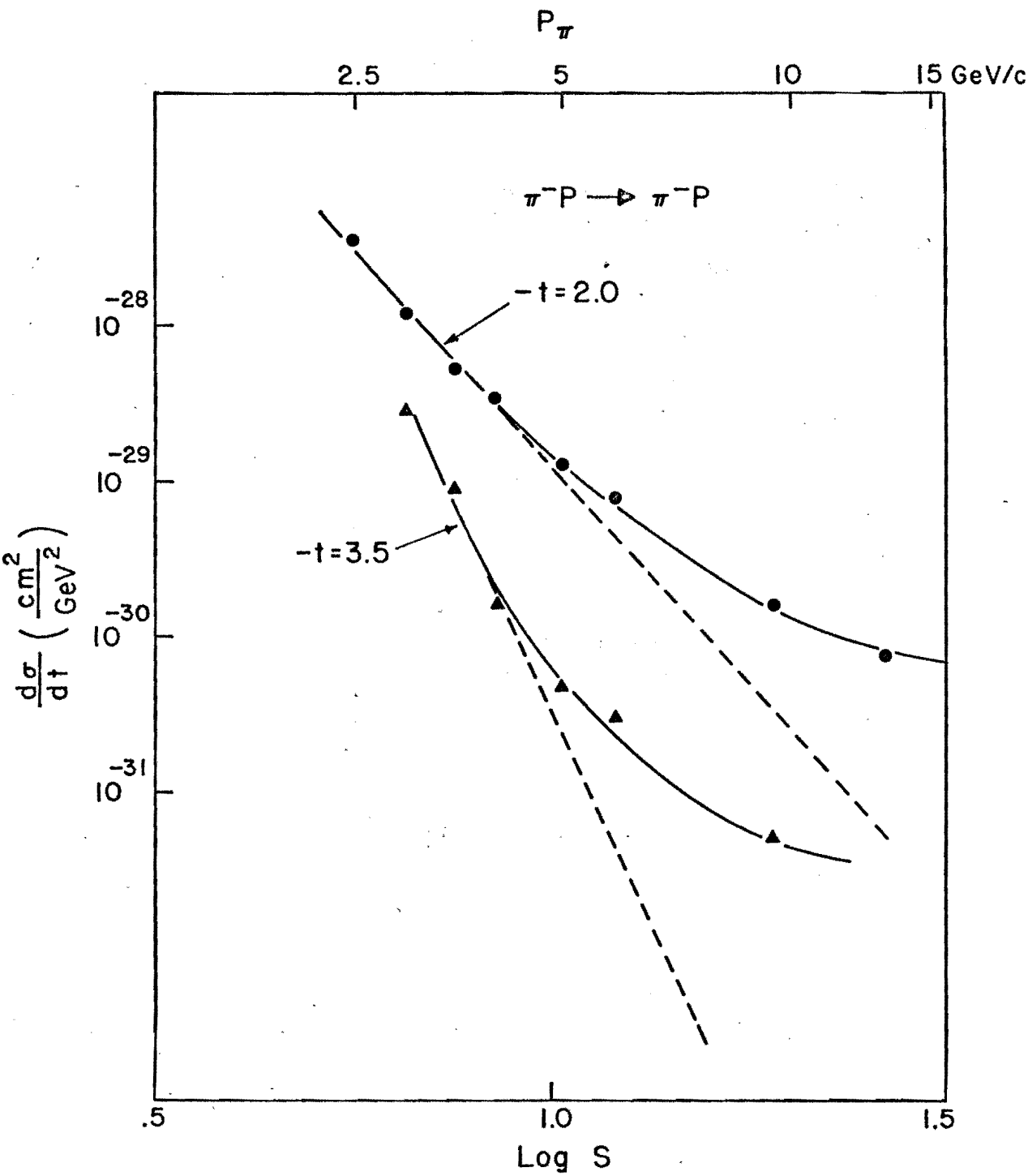
P_π
2.5
5
10
15 GeV/c
$\pi^- P \rightarrow \pi^- P$
$-t = 2.0$
$-t = 3.5$
10^{-28}
10^{-29}
10^{-30}
10^{-31}
$\frac{d\sigma}{dt}\left(\frac{cm^2}{GeV^2}\right)$
.5
1.0
1.5
Log S

Figure 2

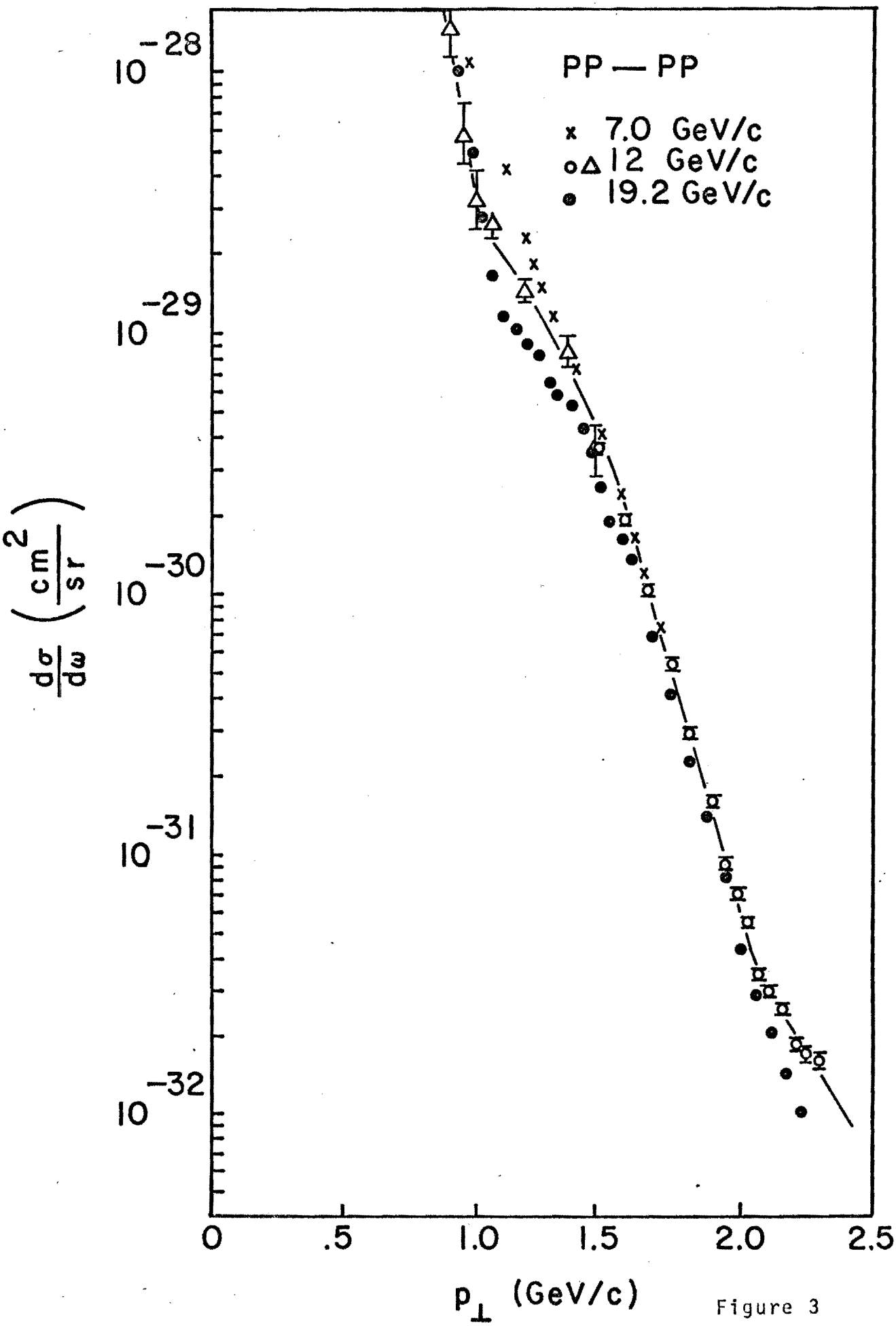
PP — PP
x 7.0 GeV/c
o△ 12 GeV/c
● 19.2 GeV/c
10^{-28}
10^{-29}
10^{-30}
10^{-31}
10^{-32}
$\frac{d\sigma}{d\omega}\left(\frac{cm^2}{sr}\right)$
0
.5
1.0
1.5
2.0
2.5
$p_\perp$ (GeV/c)

Figure 3

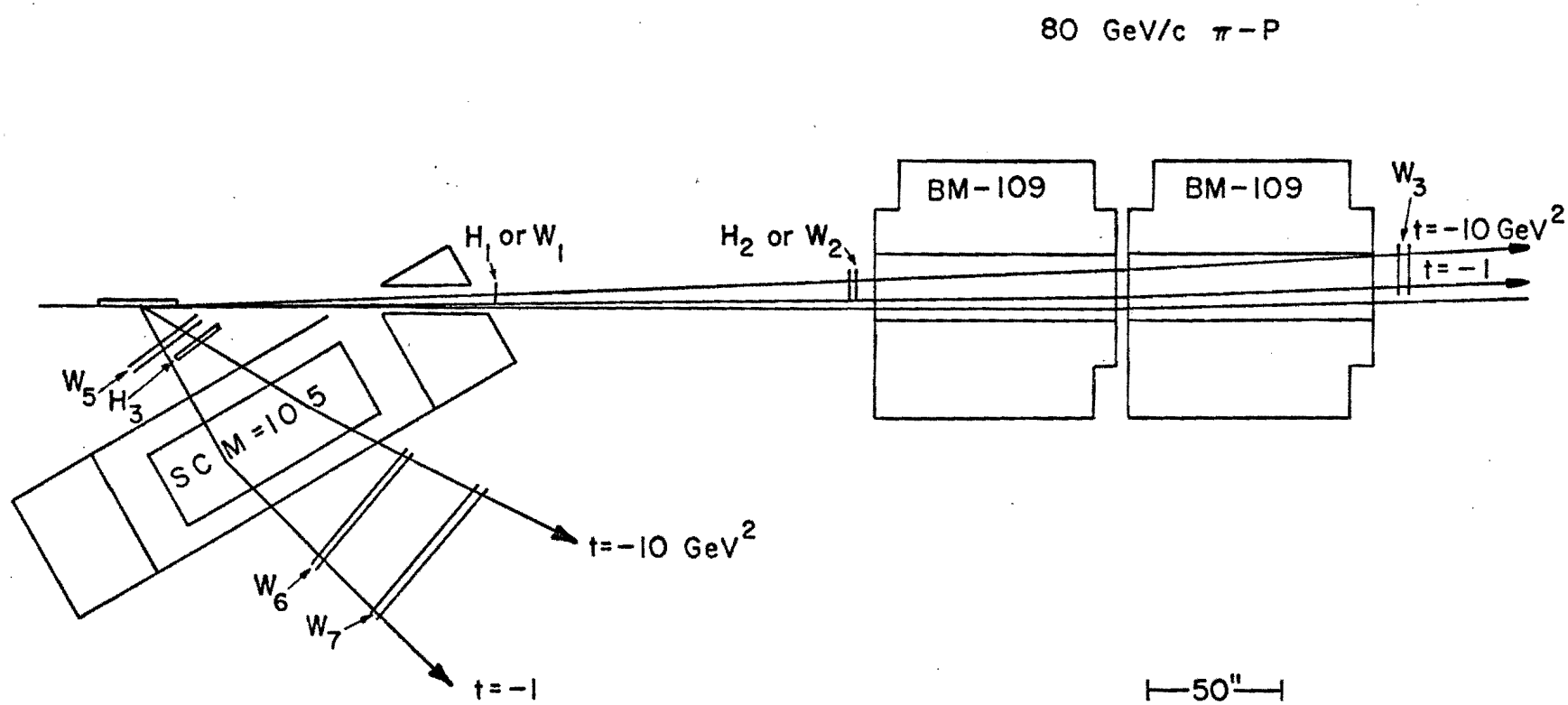
80 GeV/c π−P
BM-109
BM-109
W3
t=−10 GeV2
t=−1
H1 or W1
H2 or W2
W5
H3
SC M=10 5
t=−10 GeV2
W6
W7
t=−1
50"

Figure 4

80 GeV/c $\pi - P$

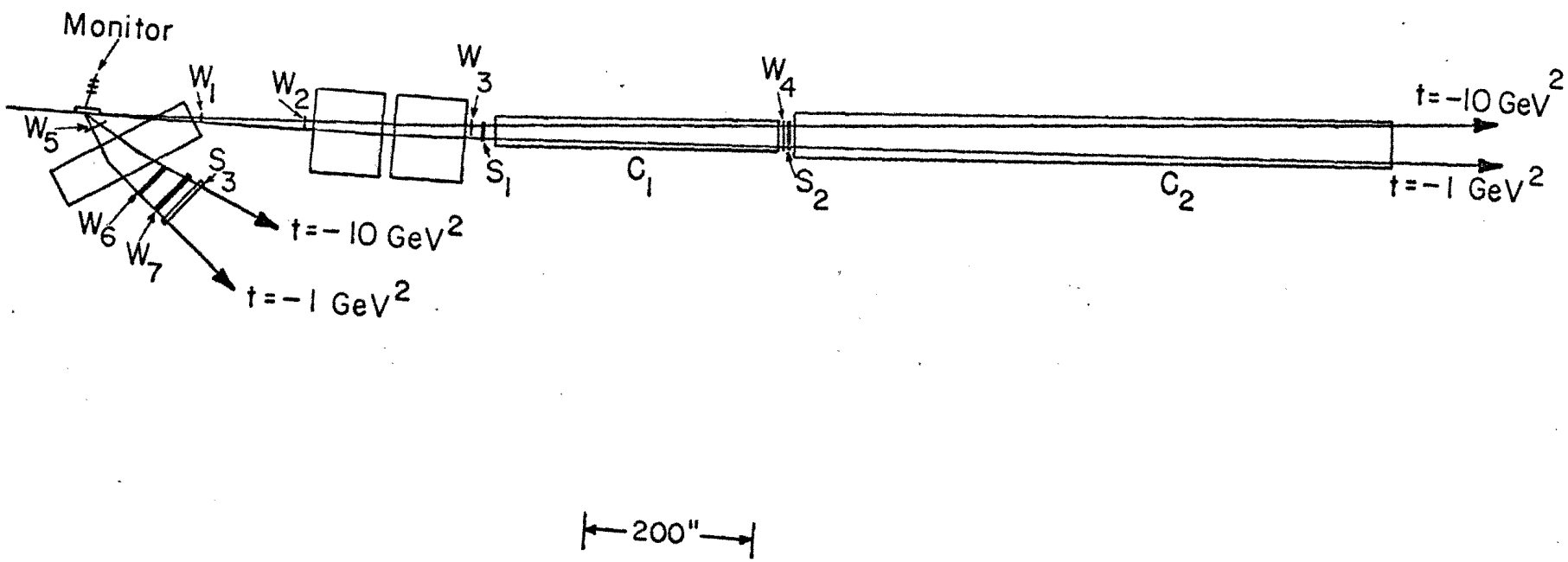

Figure 5

80 GeV/c $\pi - P$

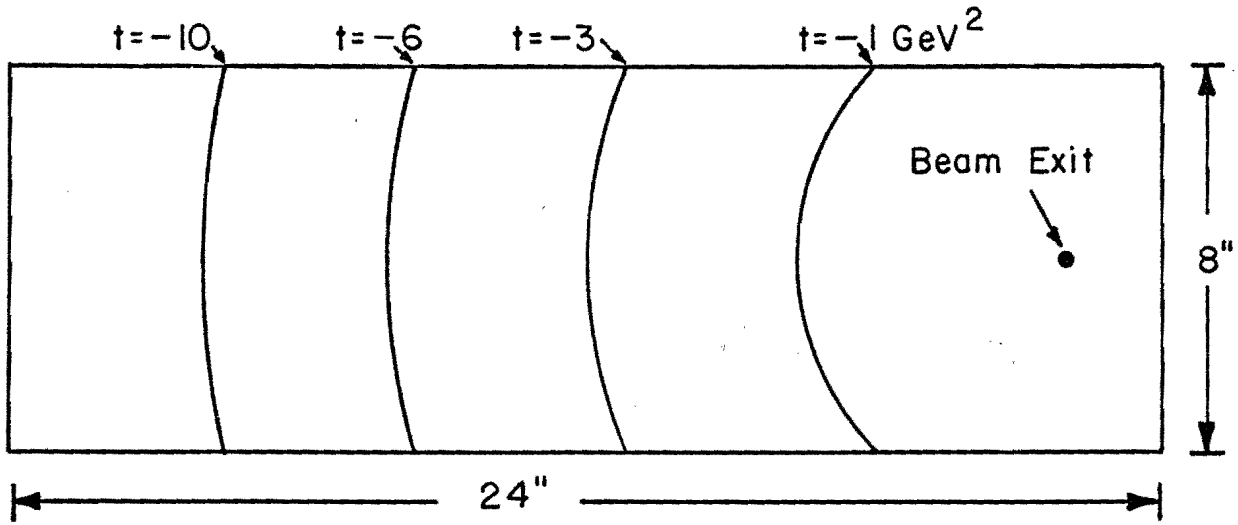

Figure 6

NAL PROPOSAL No. 50

Correspondent: J. Orear
Lab of Nuclear Studies
Cornell University
Ithaca, New York

FTS/Off-net: 607-772-1050
275-2328

LARGE ANGLE $\pi^{\pm}$-P, $K^{\pm}$-P, AND $P^{\pm}$-P ELASTIC SCATTERING AT HIGH ENERGIES

P. Mazur, J. Orear, J. Peoples
Cornell University

R. Rubinstein
Brookhaven National Laboratory

June 12, 1970

LARGE ANGLE $\pi^{\pm}$-P, $K^{\pm}$-P, AND $P^{\pm}$-P ELASTIC SCATTERING AT HIGH ENERGIES

Abstract:

The main purpose of this experiment is to establish the asymptotic "diffraction patterns" of hadron-hadron elastic scattering (if they exist in the 100 GeV region). Wire chambers and counters will be used to measure the angle and momentum of the scattered particle and the angle of the recoil proton. The high-energy-high-intensity secondary beam would be used to measure π^--P, π^+-P, K^+-P, K^--P, $\bar{P}$-P, and P-P at 50 and 80 GeV/c at momentum transfers up to $-t \sim 7$ GeV^2 and π^--P at 120 GeV/c. Also P-P would be measured at 200GeV/c in the region $1<-t<15$ GeV^2.

Names of Experimenters:

P. Mazur, J. Orear, J. Peoples — Cornell University

R. Rubinstein — BNL

Correspondent:

J. Orear

June 12, 1970

II. Physics Justification

The total cross section results from Serpukhov have shown that asymptopia will not be reached at NAL via total cross sections, i.e., particle and antiparticle total cross sections will not be equal at 500 GeV/c. However, there is a good chance that asymptopia can be reached at NAL via large angle elastic scattering.[1] By asymptopia, not only do we mean that the π^+-P and π^--P angular distributions will be the same, but also that $d\sigma/dt$ will no longer be a function of the beam momentum. So far π-P large angle scattering has only been measured up to 14 GeV/c.[2] But already there are indications that one is approaching this kind of asymptotic limit. Recently large angle π^+-P has been measured at 5 GeV/c[3] and found to contain the same kind of sharp dip at $-t \sim 3$ GeV^2 that was found in π^--P. In Fig. 1 the new 5 GeV/c π^+-P results are compared with the Cornell-BNL 5.9 GeV/c π^--P results. In addition there are preliminary results from a large angle charge exchange experiment at ANL that show no sign of a dip at $-t \sim 3$ GeV^2.[4] Since Pomeron exchange (or its equivalent) is strictly forbidden in charge exchange scattering, it appears that the dip is associated with Pomeron exchange or some diffraction mechanism. Not only do the π^+-P and π^--P angular distributions seem to be approaching each other, but the rapid decrease with energy of $d\sigma/dt$ at fixed t seems to be dropping off at the higher energies. This is seen in Fig. 2 where log $d\sigma/dt$ at $-t = 2.0$ and 3.5 GeV^2 is plotted vs. logS. A powerlaw dependence would be given by a straight-line with a slope of $(2\,\alpha_{eff}-2)$. We see that α_{eff} is becoming more positive with increasing energy. (At asymptopia $\alpha_{eff} = 1$.)

Several groups of theorists have proposed that P-P elastic scattering is related to the proton form factor obtained from e-P scattering. All these theorists are forced to conclude that the 30 GeV/c P-P cross section curve must be close to the asymptotic limit.[1] Another question concerning P-P elastic scattering is the large difference in $d\sigma/dt$ for $\bar{P}$-P and P-P. These differential cross sections should approach each other at high energy.

Another relatively new phenomenon in large angle scattering is the appearance of sharp dips and kinks in the angular distributions as one goes to higher energy. Such sharp dips in the asymptotic diffraction curve were predicted by Chou and Yang[5] before such structures in the large angle region were found. We have already discussed the spectacular dip in π-P at $t \sim -3$ GeV^2. Fig. 3 shows the kink in P-P scattering at $t \sim -1.4$ GeV^2 as a function of energy. This kink suddenly appears around 10 GeV/c and grows with increasing energy. K^+-P might be expected to show similar behavior since it is the only other system uncomplicated by direct channel resonances. Similar structures that are predicted for higher t-values may be filled in by the energy dependent contribution to elastic scattering. In order to see such structures one must go to higher energies where the energy dependent contribution has faded away.[1]

The technique proposed here is particularly well suited for revealing sharp structures in angular distributions. At $-t \sim 3$ GeV^2, the rms resolution in t is $\sim$0.025 GeV^2. Also, since the entire angular region is measured simultaneously, there is no point-to-point relative error. By comparison, the focusing single

spectrometer system still used by CERN,[6] has an intrinsic point to point "jitter" of ±4%. In their paper the CERN group says, "These values are much bigger than the statistical errors, and are determined from the reproducibility of the measurements."

Another interesting question is whether or not there is an asymptotic limit to the width of the forward diffraction peak. Recent Serpukhov results show that the diffraction peak in P-P elastic scattering is still shrinking up to 70 GeV/c. A short part of each run would be at reduced beam intensity to measure elastic scattering in the region $0.1<-t<1.5$ GeV^2. Also new dips or kinks may show up in this region as well.

III. Experimental Arrangement

a. The Forward Spectrometer

As shown in Fig. 4, the forward spectrometer consists of three 18D72's or their equivalent. The magnet gaps are 6, 7, and 8 inches as one proceeds downstream and subtend a solid angle of 850 μsr. The 80 GeV/c scattered pions are deflected by 35 mr away from the beam (a bending power of 160 GeV/c-degrees). Hodoscopes H_1 and H_2 and proportional wire chambers W_1 and W_2 permit an angle measurement ±0.5 mr (compared to ~±1 mr spread in the incoming beam), and a momentum determination of ±1.5% (compared to ±2.5% in the incoming beam). During low intensity running, when particles can be counted in the beam, the momentum determination becomes ±0.4%. S_1S_2 make up a bank of 15 side by side trigger telescopes. In addition, pulses from

groups of wires in W_1 and W_2 could be used in the fast logic. The coincidence $H_1 \cdot H_2 \cdot S_1 \cdot S_2$ requires that the forward particle have a transverse momentum greater than ~1 GeV/c which for most forward peaks is down by e^{-10}. For low cross section running, the lower t-value telescopes will be turned off, greatly reducing the trigger rate. The typical trigger telescope has a momentum resolution of ±10%. The hodoscopes H_1 and H_2 consist of vertical scintillator fingers 2 mm wide. The beam passes about 1 cm from the nearest finger in H_1 (at an angle of 12 mr from the target). The instantaneous interaction rate in the target may be as high as $\sim 5 \times 10^7$ sec^{-1}. The rate of secondaries passing through H_1 should be significantly less than this; hence the rate in each finger should be less than 10^6 sec^{-1}. H_1 consists of about 15 fingers. In the case of double H_1H_2 events, only one possibility will match up with W_1W_2 which will have much lower rates. Actually H_1 and H_2 offer redundant information and are not absolutely necessary. By using a 1 cm diameter hydrogen target, the vertex is determined to within ±5 mm using the recoil proton track. This vertex determination along with W_1 and W_2 give a momentum determination of ±2% on the scattered particle.

Fig. 5 is a view of the exit port of M_3 looking downstream. In the region of the $t = -3$ GeV^2 dip the azimuth bite is $\Delta\phi = 58°$. The gas Cerenkov counters C_1 and C_2 are discussed in Sec. c.

b. <u>The Recoil Proton Detector</u>

The heights of proportional wire chambers W_3 and W_4 overmatch the azimuth bite determined by the M_3 magnet gap. The spacing between W_3 and W_4 is 26 inches giving an angle measuring accuracy

$\Delta\theta_p = \pm 1.5$ mr. This corresponds to an "angular" resolution of $\Delta t = \pm .018$ GeV^2 at $-t \sim 3$ GeV^2. After taking into account the ± 1 mr divergence of the incoming beam, the resolution in t per event will be $\Delta t = \pm .022$ GeV^2. At $-t = 0.1$ GeV^2 the resolution in t becomes $\pm .002$ GeV^2.

The main source of particles giving pulses in W_3 will be recoil protons from elastic scatterings. The chance that a beam particle elastically scatter and have its recoil proton pointing in the direction of W_3 is $\sim .002$. Over half of these will be absorbed before reaching W_3, so the rate in W_3 should be $\sim 10^5$ particles/sec.

c. <u>The Beam</u>

In order to reach the lowest possible cross sections, one should use the highest intensity beam possible, a long target, and large solid angle. We plan to use the high-energy-high-intensity beam in Area 2 at full intensity (full momentum bite of $\Delta P/P = 5\%$). For 80 GeV/c pions, the instantaneous rates will be $\sim 5\times 10^8$ particles/sec which precludes counting directly in the beam. We plan to use a small monitor telescope looking at elastic recoil protons (at low t value). Also the beam will be independently monitored by recording $S_3 \cdot S_4$ coincidences. The relatively poor momentum and angle resolution of this beam hardly affects the resolution in t, since at these energies the recoil proton angle is independent of the beam momentum: $\sin\theta_p = (t/4M^2+1)^{-\frac{1}{2}}$. As discussed in the previous section, the t resolution is determined by the proton angle measurement, and at $t = -3$ GeV^2 it should be $\Delta t = \pm 0.022$ GeV^2.

The main error in determination of θ_π, the pion lab scattering angle, will be the beam divergence of ±1 mr. At fixed t, a $\Delta P/P = \pm.025$ momentum spread in the beam gives $\Delta\theta_\pi = \pm 0.5$ mr. θ_π is not used to determine the t-value of the event. In the short, low t-value runs $\Delta\theta_\pi$ can be determined to within ±.1 mr by placing a small proportional wire chamber upstream of the target. At $-t = 0.1$ GeV^2, $\theta_\pi = 3.7$ mr.

Particle identification will not be attempted in the beam. However, the scattered particles leaving M_3 will be low intensity so that threshold Cerenkov counters could be used. Gas Cerenkov counter C_1 will give light (~30 photons/pion) for 80 GeV/c pions, but no light for kaons or protons. Counter C_2 will give light for pions and kaons, but not for protons. These pulses along with the trigger will identify whether the scattered particle is a pion, kaon, or proton. In π^+-P scattering, $d\sigma/dt$ in the region of the t = -3 dip may be 2 or 3 orders of magnitude smaller than the corresponding cross section for P-P scattering. Since the P/π^+ ratio at 80 GeV/c is expected to be ~1,[7] the C_1, C_2 redundancy should reject protons from elastic P-P by a factor of ~10^4 or better. At 10 GeV/c the K^--P and $\bar{P}$-P angular distributions are similar to the π^--P.[2] If this is still true at 80 GeV/c, we would expect C_1 and C_2 to do a reasonably good job in determining the K-P and $\bar{P}$-P angular distribution at 80 GeV/c. However, for the 120 GeV/c π^- run, we do not propose to separate K^- from π^- using Cerenkov counters. Since at this momentum the K^-/π^- ratio should be ~10^{-2}, the K^--P cross section would have to be two orders of magnitude larger than the π^--P to cause trouble. If this unlikely situation happens to occur, we will know it from the 80 GeV/c results.

Note that the high intensity beam passes through our apparatus relatively unaffected. Only 10% of the beam interacts in the 36 inch liquid hydrogen target and the multiple scattering is negligible (.05 mr). The beam could be refocussed for another user downstream from our experiment. Both experiments could run simultaneously at full intensity.

d. Estimated Rates

If we make the most pessimistic assumption that the π-P cross section continues to drop off as P_{lab}^{-4} ($\alpha_{eff} = -1$ as found at 10 GeV/c), then at 80 GeV/c and at $-t = 6$ GeV^2, $d\sigma/dt \approx 5\times10^{-36}$ cm^2/GeV^2 which is a factor of 4000 times smaller than the value at 10 GeV/c. Then the number of events in the bin $-t = (6.0\pm0.5)$ GeV^2 for a 100 hr run would be

$$N_{\pi P} = N_\pi \eta_H \frac{d\sigma}{dt} \Delta t \frac{\Delta\phi}{2\pi}$$

$$N_\pi = 2 \times 10^8 \text{ pions/sec} \times 3.6\times10^5 \text{ sec/100 hr} = 7.2\times10^{13}$$

$$\eta_H = 3.8\times10^{24} \text{ protons/cm}^2$$

$$\Delta t = 1 \text{ GeV}^2$$

$$\frac{\Delta\phi}{2\pi} = \frac{1}{10}$$

$$N_{\pi P} = 135 \text{ events/100 hr.}$$

The figure of 2×10^8 pions/sec for 80 GeV/c is obtained by assuming that Fig. 2 of SS-30 (p. 60 of Summer Study 1969, I) is a factor of 2 too optimistic.

A similar calculation for the rate at the bottom of the $t = -3$ dip gives ~45 events for a 100 hr run also assuming the most pessimistic energy dependence of P^{-4} for a bin width of ± 0.1 GeV^2.

The pessimistic assumption for P-P elastic scattering is to assume the cross section keeps dropping off as $\frac{d\sigma}{d\omega} = \frac{600}{S} e^{-\frac{p_\perp}{.16}} \frac{mb}{sr}$.[8] For 200 GeV/c protons at $t = -10$ GeV^2 this formula gives $d\sigma/dt = 10^{-37} cm^2/GeV^2$. For a proton beam of 10^9 sec^{-1} this gives ~50 events per 100 hrs for the bin $-t = (10\pm1)$ GeV/^{2}

e. Background

Nearly all inelastic events which emit a forward particle at a given θ_π will have the wrong P_π, the wrong θ_p, and the wrong ϕ_p. We have three independent chances to kill the background (a 3 constraint fit). The dynamical process which comes closest to fooling our system is $\pi^\pm + P \rightarrow \pi^\pm + N^{*+}$ followed by $N^{*+} \rightarrow \pi^\circ + P$. However it is known that such cross sections are no larger than the elastic cross section and that they decrease with t at least as fast as the elastic cross section.[9] This mechanism will survive the P_π cut which will be about 4 GeV/c wide. If one plots the number of events vs. (θ_p(measured) - θ_p(predicted)) the elastic peak will be ~±25 mr wide and the rms width of the (ϕ_p(measured) - ϕ_p(predicted)) peak will be ~40 mr. The probability that the decay proton from a typical N^* lie in both these peaks is ~0.015. The conclusion is that isobar production might contribute at most a few percent background. The background can easily be determined from the above plots or from an overall Chi-squared plot.

So far the kind of experimental system proposed here has been used only once.[3] After all cuts were made this 5 GeV/c experiment was completely background free over the entire angular region. In the Fall of 1970 some of the co-authors of this proposal will be doing almost this same experiment with very similar equipment at 23 GeV/c at the AGS (AGS Exp. 324).

For the multiparticle events which sneak through, it is expected that the cross section for the leading particle will drop off at least as fast as $e^{-5p_\perp}$.[10,11] This leads us to believe that the ratio of background to elastic scattering would be relatively energy independent and that the lack of background at 5 GeV/c is a good omen for 120 GeV/c.

f. Time Estimates

We give highest priority to the following runs:

Reaction	t-Region	Running Time
50 GeV/c (π^-, K^-, $\bar{P}$)	1-6	50 hrs
50 GeV/c (π^+, K^+, $\bar{P}$)	1-6	50
80 GeV/c (π^-, K^-, $\bar{P}$)	0.1-7 GeV^2	100
80 GeV/c (π^+, K^+, P)	0.1-7	100
120 GeV/c π^--P	0.1-7	150
200 GeV/c P-P	0.1-15	150
	total running time:	600 hrs.

We have not made estimates for testing time since we are proposing that we build and install most of the system described above. Most of the testing would then occur during the installation period. There are two main reasons why we feel it would be most effective for us to do this job. The first reason being

that we will be doing a very similar experiment at the AGS in the Fall of 1970 and could re-use some of the same equipment at NAL. The second reason is that the Cornell proportional wire chamber facility has reached the point where six 2 ft x 2 ft chambers are now running quite successfully in an electron spectrometer experiment on the Cornell 10 GeV Synchrotron. Both Mazur and Peoples of our group have been working with Hartill and Berkelman in this development. In addition, all members of our group could spend 1971-72 at NAL. Both Orear and Peoples would be free of all academic duties (Orear has a sabbatical and Peoples has a Sloan fellowship). We propose building and installing the system, using it for the above run, and permanently leaving it as a NAL facility for other users.

g. Other Physics

This large aperture system can do other reactions in addition to further studies of elastic scattering. For example, by moving the "recoil proton" detector back so than W_3 and W_4 subtend angles from 90° to 170°, the backward peak in π^--P elastic scattering could be measured up to ~140 GeV/c. Here the energy dependence is expected to be a well-behaved power law $(\frac{d\sigma}{du})_o \alpha S^{2\alpha_o - 2}$ where α_o is the u = 0 intercept of the Δ-trajectory; i.e., $\alpha_\Delta = \alpha_o + \alpha_o' u$. The rate of increase in slope of the π^--P backward peak yields the slope of the Δ-trajectory. In order to make a good determination of α_o' it is necessary to measure the slopes at widely spaced energies. At 80 GeV/c the slope should be a factor of two steeper than at 10 GeV/c. One could then determine

α_0' to a few percent, whereas now it is not known for sure whether or not the backward peak is shrinking. Of all the forward and backward peaks in physics, the π^--P backward peak is perhaps the "cleanest" since no competing exchange amplitudes are expected. At 80 GeV/c $\frac{d\sigma}{du}$ at u=0 would be $\sim 2\times10^{-32}\,cm^2/GeV^2$. For the bin $-u = (0.3\pm.05)\ GeV^2$, we estimate about 5,000 events for a 50 hr run.

Not only can forward diffraction peaks be studied down to $-t \approx 0.05\ GeV^2$, but other forward reactions as well. In terms of solid angles and detectors, this 800 μsr system would be an NAL counterpart of the present "double V" facility of the BNL Lindenbaum group. Certainly the proportional chambers are ideal for double track detection. One should be able to measure $\pi^- P \to K^0 + (\Lambda^0 \text{ or } \Sigma^0)$ at 80 GeV/c up to $-t \sim 2\ GeV^2$ without adding a large aperture magnet to the vertex detector. At 14 GeV/c and at $-t = 1.4\ GeV^2$, $\frac{d\sigma}{dt}$ for the reaction $\pi^+ P \to K^+ \Sigma^+$ is only an order of magnitude lower than elastic scattering.[12]

Some possible modifications for other users would be the addition of threshold Cerenkov counters in the beam, closing down the momentum slits in the beam to obtain $\frac{\Delta P}{P} \sim \pm 0.2\%$, proportional wire chambers in the beam to measure beam particle directions, modifications of the vertex detector such as proton energy detectors for missing mass experiments, or a large aperture magnet. The forward spectrometer alone could be used to study secondary production in π-P collisions.

In the event that quarks are found at NAL, the high-energy-high-intensity beam would be most suitable for providing beams of momentum analysed quarks. Because of the long target and large solid angles, our proposed system is well-suited for studying quark-proton interactions and this would receive our highest priority. It is perhaps wise to install systems which can quickly be converted to do quark physics.

IV. Apparatus

Probably the simplest and most practical way to obtain the magnetic field for the forward spectrometer is to use three standard 18D72's which perhaps could be obtained from PPA or BNL. A somewhat more economical special purpose magnet for this system could be built at a rough cost of ~$100K. The volume of field needed at 20 kgauss is about the same as that of a 30D72, so the cost should be about the same.

We propose that the 4 wire chambers be proportional chambers of 3 gaps each and that they be built at Cornell. Operational chambers have been built at Cornell under the direction of D. Hartill and these chambers are now in use in an inelastic electron scattering experiment at Cornell. The electron beam conditions are more demanding than the experiment proposed here. Our group has constructed similar chambers and will continue to do development. We wish to stress that the ability to construct working chambers exists at Cornell in a very real sense. The horizontal x vertical dimensions are 12x9, 24x18, 30x17, and 35x35 inches respectively which comes to a total of about 3500 wires or a total cost of about $35K. Some logic for the trigger system is available at Cornell, but we would hope to make use of a NAL electronics pool. Some of the same trigger counters used on AGS Exp. 324 could also be used on this experiment. The Cerenkov counters are designed to give 30 photons (~6 photoelectrons) using 58DUVP phototubes. C_1 would use helium at 0.57 atm. C_2 is designed to run at 1 atm. using neon (the threshold for 80 GeV/c protons).

Our minimum requirements for on-line analysis arise from the need to monitor the proportional chambers. If only the elastic events are analyzed during the experiment, the low event rate would make it unnecessary to have a large computer at our disposal. For example, we could get by without floating point hardware or Fortran software. The minimum computer system would include:

1. A complete set of fixed arithmetic instructions and logical instructions. A memory cycle time of $\sim 1\ \mu$sec.
2. Sufficient I/O capability to be able to handle two tape drives, a teletype, printer or display, and the experiment without interference.
3. Peripheral equipment which would include two tape drives, a teletype, a device for loading the on-line program and a printer or a display.
4. The software should be capable of supporting an assembly language with macros and contain routines for debugging assembly language programs while in core such as exist for the PDP-15 or PDP-6.

A number of commercially available machines can satisfy these requirements. We would prefer not to supply the computer and its peripheral equipment in the event that the equipment was to pass out of the control of Cornell University (which would be the case if the system we are proposing became an NAL facility). We would be glad to write the necessary software to use such a small machine. A more powerful system such as the OLDF at Brookhaven would be desirable as it would permit extensive use of Fortran. It is however not necessary. If we were to use such a system,

20 to 30K of core and 5 to 10% of the data processing capacity of a machine such as the PDP-10 would be more than adequate.

The present Cornell users group grant (NSF grant GP-15214, Orear and Peoples, principal investigators) allows for spending $58K on equipment and supplies per 2 year period. In the event that the Cornell expenses would be greater than this, Dr. J. Howard McMillen has written us, "I would be willing to try to bring about a small expansion in your current support for the duration of the NAL experiment." A 15% expansion could provide for $45K of additional equipment.

At present we are working with Dr. E. Bleser of NAL as our unofficial liason physicist. In this preliminary proposal we have intentionally kept the number of co-authors and collaborating institutions small with the anticipation of joining forces with another like-minded group. The first round of preliminary proposals should show which other groups have similar interests.

References

1. For various theoretical approaches to large angle scattering see the review article of C.B. Chiu, R.M.P. 41, 640 (1969). Many of the authors reviewed here predict an energy independent $d\sigma/dt$ above a certain "asymptotic" energy.
2. Owen, et al., Phys. Rev. 181, 1794 (1969).
3. Rust, et al., Phys. Rev. Letters 24, (1970).
4. W.R. Frisken, private communication.
5. Chou and Yang, Phys. Rev. Letters 20, 1213 (1968).
6. Allaby, et al., Physics Letters 28B, 67 (1968).
7. NAL 1969 Summer Study I, pages 50 and 400.
8. Orear, Physics Letters 13, 190 (1964).
9. Foley, et al., Phys. Rev. Letters 19, 397 (1967); and Allaby, et al., Physics Letters 28B, 229 (1968).
10. NAL Summer Study I, 397 (Cocconi) (1969).
11. A.D. Krisch suggests that at high $p_\perp$, the drop off of secondaries will be even faster; e.g., it will go as $e^{-ap_\perp^2}$.
12. Preliminary Stony Brook results, page 75 of "High Energy Collisions, Stony Brook, 1969."

Figure Captions

Fig. 1. The 5 GeV/c π^+-P data of Ref. 3 have been connected by a smooth curve. The 5.9 and 9.7 GeV/c π^--P points are from Ref. 2.

Fig. 2. The log of $d\sigma/dt$ for π^--P elastic scattering plotted vs. the log of P_π, the beam momentum, for $-t = 2.0$ and 3.5 GeV^2. Note the decreasing slope at high beam momenta. If the slope becomes zero, $\frac{d\sigma}{dt}$ becomes energy independent.

Fig. 3. $d\sigma/d\omega$ plotted vs. $p_\perp$ for P-P elastic scattering using results of Ref. 6.

Fig. 4. Layout for the 80 GeV/c runs. H_1 and H_2 are vertical hodoscopes. M_1-M_3 are 18D72's. W_1-W_4 are proportional wire chambers. C_1 and C_2 are threshold gas Cerenkov counters.

Fig. 5. Exit port of M_3 looking downstream. The t-value "contours" are for 80 GeV/c scattered particles.

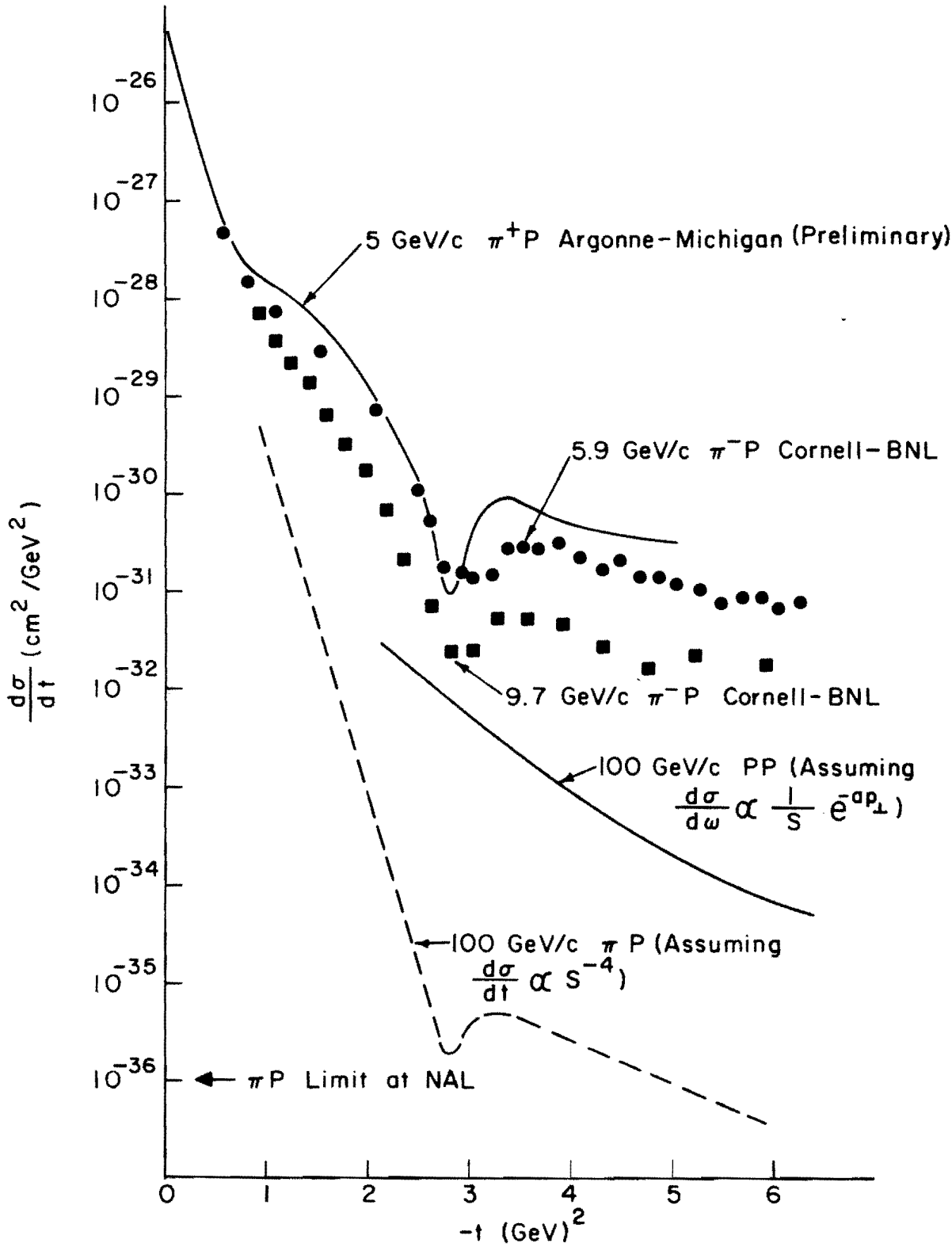
5 GeV/c π^+P Argonne-Michigan (Preliminary)
5.9 GeV/c π^-P Cornell-BNL
9.7 GeV/c π^-P Cornell-BNL
100 GeV/c PP (Assuming $\frac{d\sigma}{d\omega} \propto \frac{1}{S} e^{-ap_\perp}$)
100 GeV/c πP (Assuming $\frac{d\sigma}{dt} \propto S^{-4}$)
πP Limit at NAL
$\frac{d\sigma}{dt}$ (cm^2/GeV^2)
10^{-26}
10^{-27}
10^{-28}
10^{-29}
10^{-30}
10^{-31}
10^{-32}
10^{-33}
10^{-34}
10^{-35}
10^{-36}
0
1
2
3
4
5
6
$-t$ (GeV)^2

Figure 1

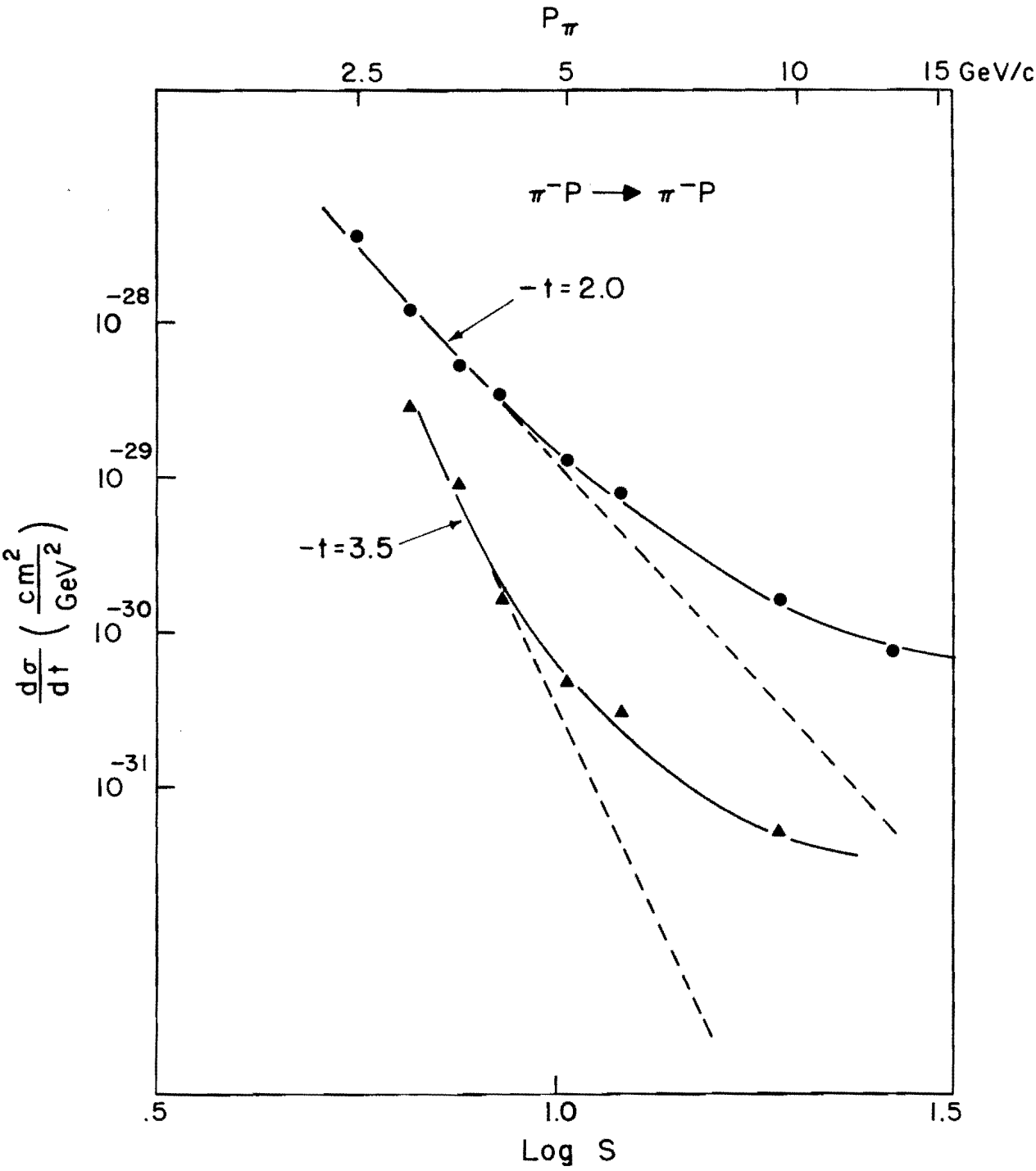
P_π
2.5
5
10
15 GeV/c
$\pi^- P \rightarrow \pi^- P$
$-t = 2.0$
$-t = 3.5$
10^{-28}
10^{-29}
10^{-30}
10^{-31}
$\frac{d\sigma}{dt} \left(\frac{cm^2}{GeV^2} \right)$
.5
1.0
1.5
Log S

Figure 2

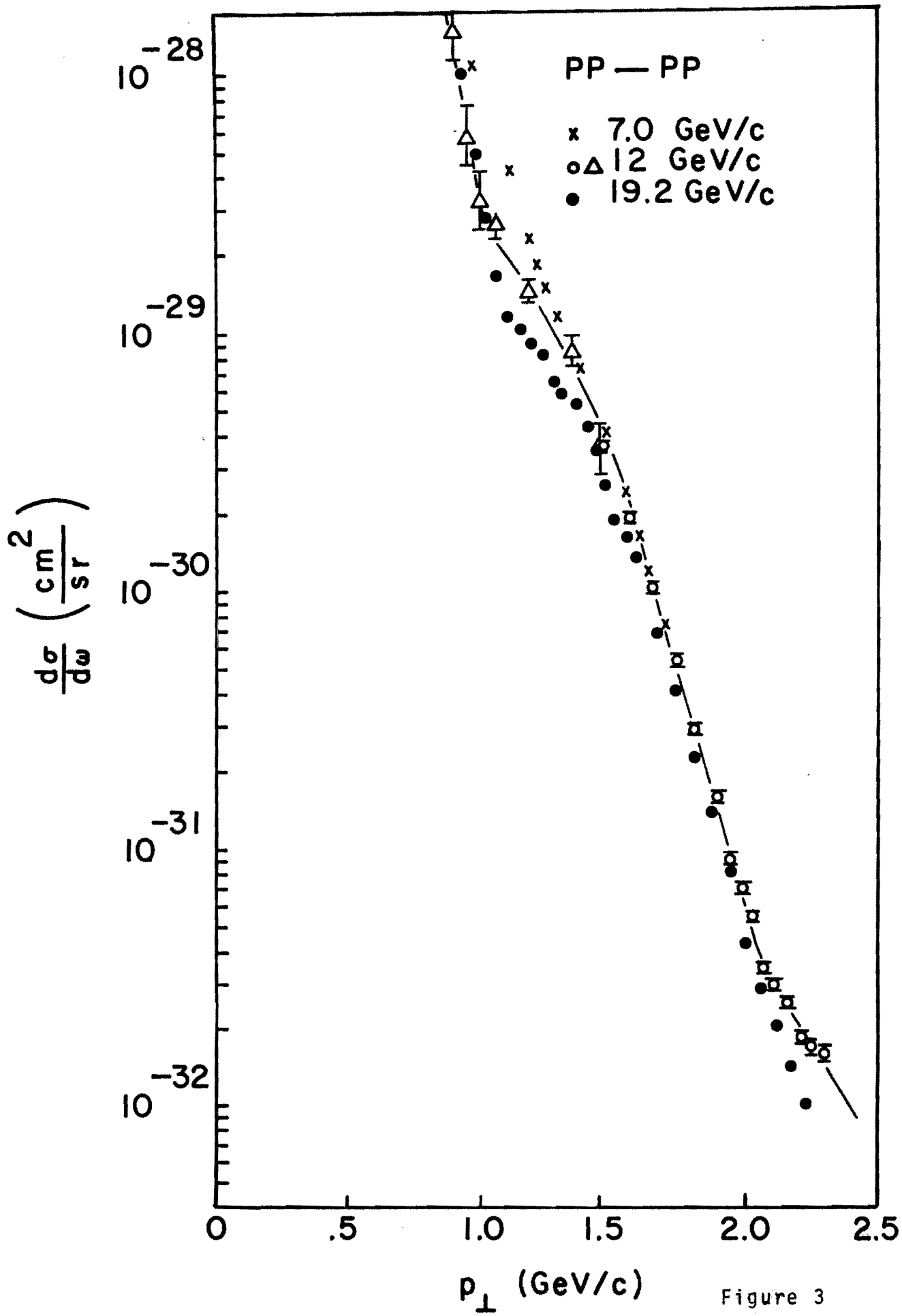
PP — PP
x 7.0 GeV/c
o△ 12 GeV/c
● 19.2 GeV/c
10^{-28}
10^{-29}
10^{-30}
10^{-31}
10^{-32}
$\frac{d\sigma}{d\omega}\left(\frac{cm^2}{sr}\right)$
0
.5
1.0
1.5
2.0
2.5
$p_\perp$ (GeV/c)

Figure 3

80 GeV/c $\pi - P$ Elastic

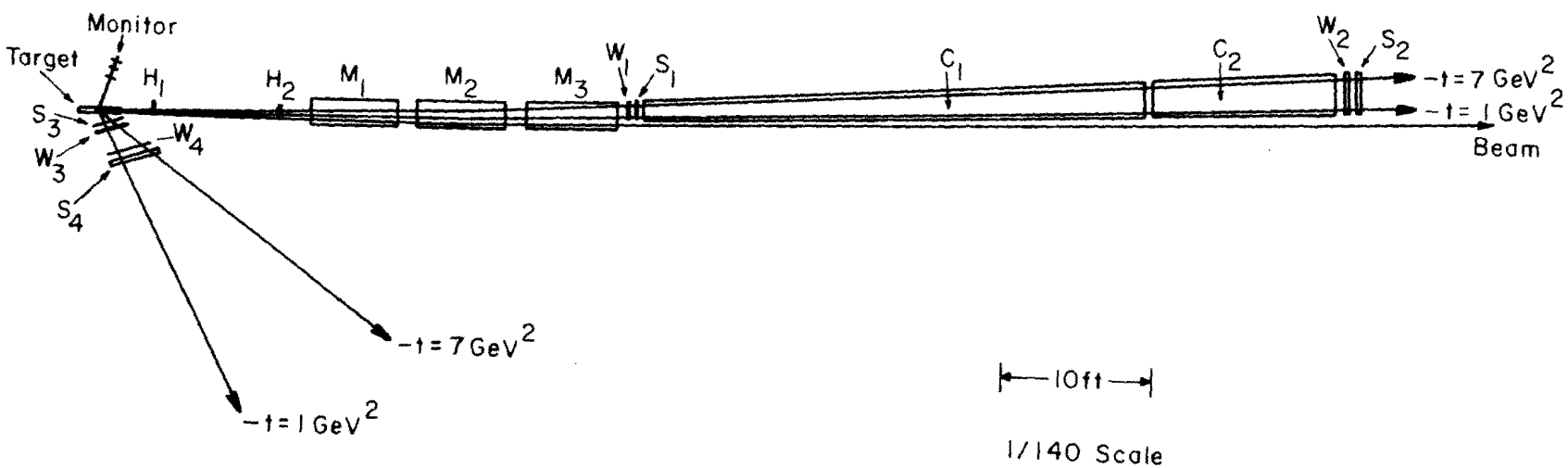

Figure 4

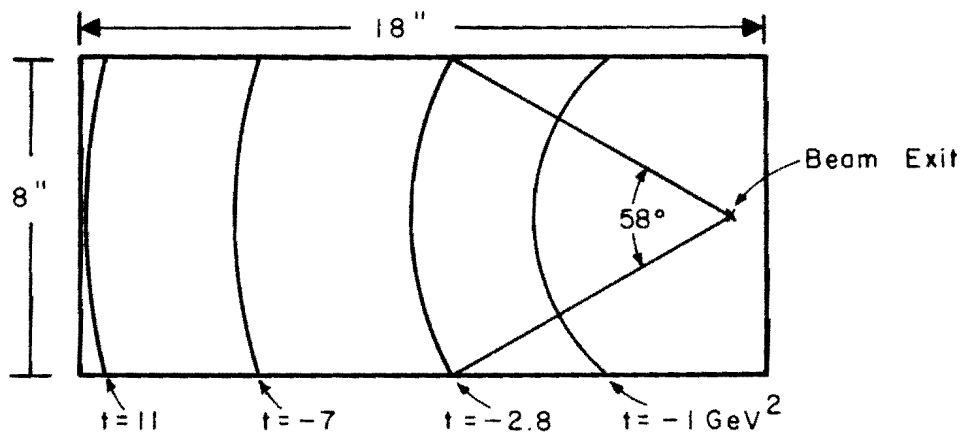

1/5 Scale

Figure 5

August 31, 1970

ADDENDUM TO NAL PROPOSAL #50 (Large Angle Scattering of $\pi^{\pm}$-P, $K^{\pm}$-P, and $P^{\pm}$-P at High Energies)

Cornell University: J. Klems, P. Mazur, J. Orear, J. Peoples

Brookhaven National Laboratory: R. Rubinstein

Joint Institute for Nuclear Research: (names to be supplied later)

Lebedev Physical Institute: M.I. Adamovich, P.S. Baranov

Details on the Inelastic Background Estimate

Several physicists including some from the NAL Summer Study 1970 have asked how can we separate elastics from inelastics without also measuring the momentum of the recoil proton - especially when the momentum of the incoming pion is only known to $\pm$ 2.5%

In order to further substantiate the claims made on p. 9 of our proposal, we have done a Monte Carlo calculation of the inelastic process which is closest to fooling our system. This is $\pi + P \rightarrow \pi + N^{*+}$ at the same t-value as the elastic scattering being measured. Our measurement of the scattered pion angle and momentum alone will not distinguish recoil N*'s from recoil protons. The question then remains, can a decay product of the N* be close enough in angle to the corresponding elastic recoil proton to fool us? In the Monte Carlo calculation we use an N* mass of 1470 Mev. This is known to be the lowest mass isobar that still survives at high energies.(1) The few isobars that can be diffractively produced have lower production cross sections than elastic scattering at high momentum transfers.(2) To be specific, we calculate for 80 Gev/c beam momentum at t=-3 Gev^2 and we assume beam divergence of $\sim \pm \frac{1}{2}$ mr (if necessary, this can be made smaller by moving the target further downstream).

The signal

The momentum and angle measurement on the scattered pion give a predicted direction to the recoil proton. Let σ_{ϕ_p} be the rms error on the predicted azimuth angle of the proton. Then $\sigma_{\phi_p} = \frac{\sigma_\alpha}{\sin\theta_\pi}$ where σ_α is the rms deviation of the beam dip angle. Using $\sigma_\alpha = \frac{1}{\sqrt{3}} \times 0.4\,mr$, we get $\sigma_{\phi_p} = 10\,mr$. The measured pion direction and momentum give a predicted t-value whose rms error is $\sigma_t = \sqrt{\left(\frac{\partial t}{\partial \theta_\pi}\right)^2 \sigma_{\theta_\pi}^2 + \left(\frac{\partial t}{\partial P}\right)^2 \sigma_P^2}$.

Using $\sigma_{\theta_\pi} = \frac{0.5\,mr}{\sqrt{3}}$ and $\frac{\sigma_P}{P} \approx .01$ gives $\sigma_t \approx 0.1$ Gev^2. The corresponding rms error in the predicted proton direction is $\sigma_{\theta_p} = \left(\frac{\partial \theta_p}{\partial t}\right) \sigma_t \approx 10$ mr. Folding in the 1.5 mr measuring accuracy on the proton does not noticably increase σ_{θ_p} or σ_{ϕ_p}.

If one were to plot the number of elastic events vs. $\Delta\theta_p$, the measured minus predicted proton scattering angle, one would get a "gaussian" of ~10 mr standard deviation. Likewise, a plot of elastic events vs $\Delta\phi_p$, the measured minus predicted azimuth angle, would be a "gaussian" of ~10 mr standard deviation.

The background

The reaction $\pi^- P \to \pi^- N^*(1470)$ at t=-3 Gev^2 has the pion scattered by 1.26° (corresponding to -t=3.02Gev^2 elastic scattering) and the recoil N* is at 36.6° (the corresponding elastic scattering has the proton at 46.5°). The N* has a velocity β=0.89 . In the decay $N^{*+} \to P + \pi^0$, the protons will have a narrower decay cone than the pions. The maximum decay angle is 13.3° in the lab system. In our Monte Carlo calculation we assume the N* decays isotropically. We calculate θ_p and ϕ_p of the decay proton in the lab system. In Fig. 1 we plot the number of N* decays vs. $\Delta\theta_p = (\theta_p - 46.1°)$. In Fig. 2 we plot vs. $\Delta\phi_p$. Elastic events would give "gaussians"

corresponding to the dashed lines.

Since θ_{cm} and ϕ_{cm} are uncorrelated in the isobar decay, the events in Fig. 1 and 2 are essentially uncorrelated. The most efficient separation procedure would be to plot events vs. χ^2 where $\chi^2 = \left(\frac{\Delta\theta_p}{\sigma_{\theta_p}}\right)^2 + \left(\frac{\Delta\phi_p}{\sigma_{\phi_p}}\right)^2$. The elastic events plotted vs. χ^2 would yield the Chi-squared distribution for two degrees of freedom which is $N(\chi^2) = \frac{N_{elastic}}{2} \exp(-\chi^2/2)$. The N* decays follow the curve in Fig. 3 as obtained from the Monte Carlo calculation. If to this bacground curve we add a signal which is 100 times weaker, we obtain the curve shown in Fig. 4. Note that under the elastic peak the ratio is 4/1 - a net improvement factor of 400 to 1. Hence the signal could easily be picked out of an inelastic background 1000 times larger. In that case the background level would be ~70% the height of the peak at $\chi^2=0$. A conservative estimate of the inelastic background accepted by the forward spectrometer is 4 times the elastics.(2) If this estimate is correct, our experiment has an overkill factor of ~200 in this t-value region.

Some members of our group have previously used this technique to separate signal from background in an experiment where the particle directions and momenta were more poorly determined.(3) In the worst case the background level was ~10% the height of the peak.

Conclusion:

We conclude that magnetic analysis of the recoil proton is not necessary for the success of this experiment.(4) The main advantage of magnetic analysis at the vertex would be to sweep out low momentum secondaries and reduce the instantaneous rates in the wire plane recoil detectors. However, if a large aperture magnet were available at NAL (such as an ANL magnet SCM-105) we would choose to use it along with a simple counter hodescope between the target and the magnet, keeping in mind the disadvantages of a reduction in our large $\Delta\phi$ bite,

added expense, and added complexity in the analysis.

References:

1. Foley, et al. Phys. Rev. Letters 19, 397 (1967); Anderson, et al., Phys. Rev. Letters 16, 855 (1966); and Allaby, et al., Physics Letters 28B, 229 (1968).

2. Allaby, et al. show that the isobars and the non-resonant background in the recoil mass region $M < 2$ Gev has the same t-dependence as the elastic scattering. They say: "The striking feature of the data displayed in fig. 2 is the similarity in the angular distributions for elastic scattering and isobar production in the region beyond $|t| = 1$ Gev^2. ... The inclusion of the continuum below the inelastic peak would not alter the conclusion, because the continuum has the same angular dependence as the isobars." They also show that at $t \sim 6$ Gev^2 and for $M < 1.9$ Gev the total cross section for isobars plus background is the same as the elastic. At 80 Gev/c our experiment will accept M up to 2.9 Gev. An extrapolation of the Allaby, et al. inelastics would then predict total inelastics ~ 4 times the elastics accepted by our forward spectrometer. Anderson, et al. show that at fixed t, the energy dependence of the isobars plus background is the same as for the elastics from 6 to 30 Gev/c. They also show that the distribution curves for M have the same shape and s and t dependence for π-P and P-P except that the π-P cross sections are ~ 3 times smaller than the P-P. We have made the pessimistic assumption that at large s and t the π-P isobar cross sections become as large as the P-P.

3. Owen, et al., Phys. Rev. 181, 1794 (1969).

4. We have repeated the above calculations for 3 particle decay of N*(1470) and N*(1688) and obtain Chi-squared distributions even more spread out than that of Fig. 3.

FIG. 1

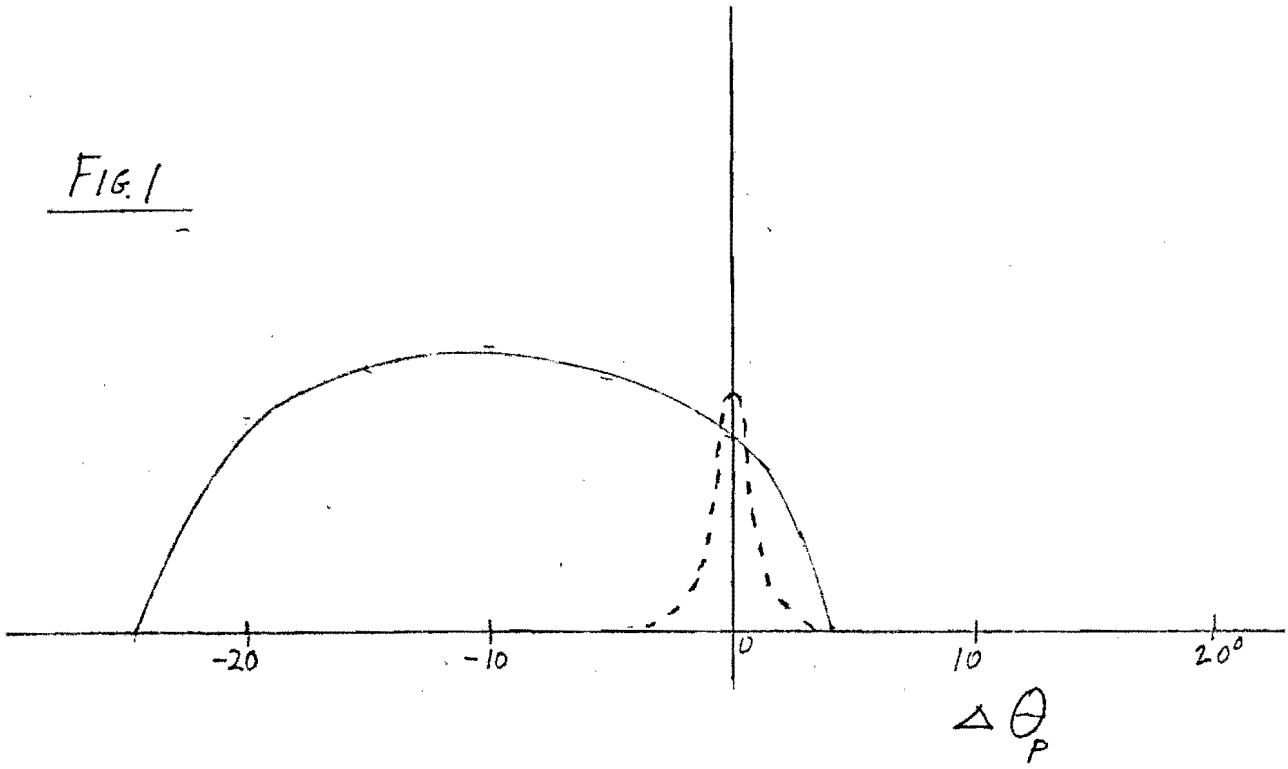

FIG. 2

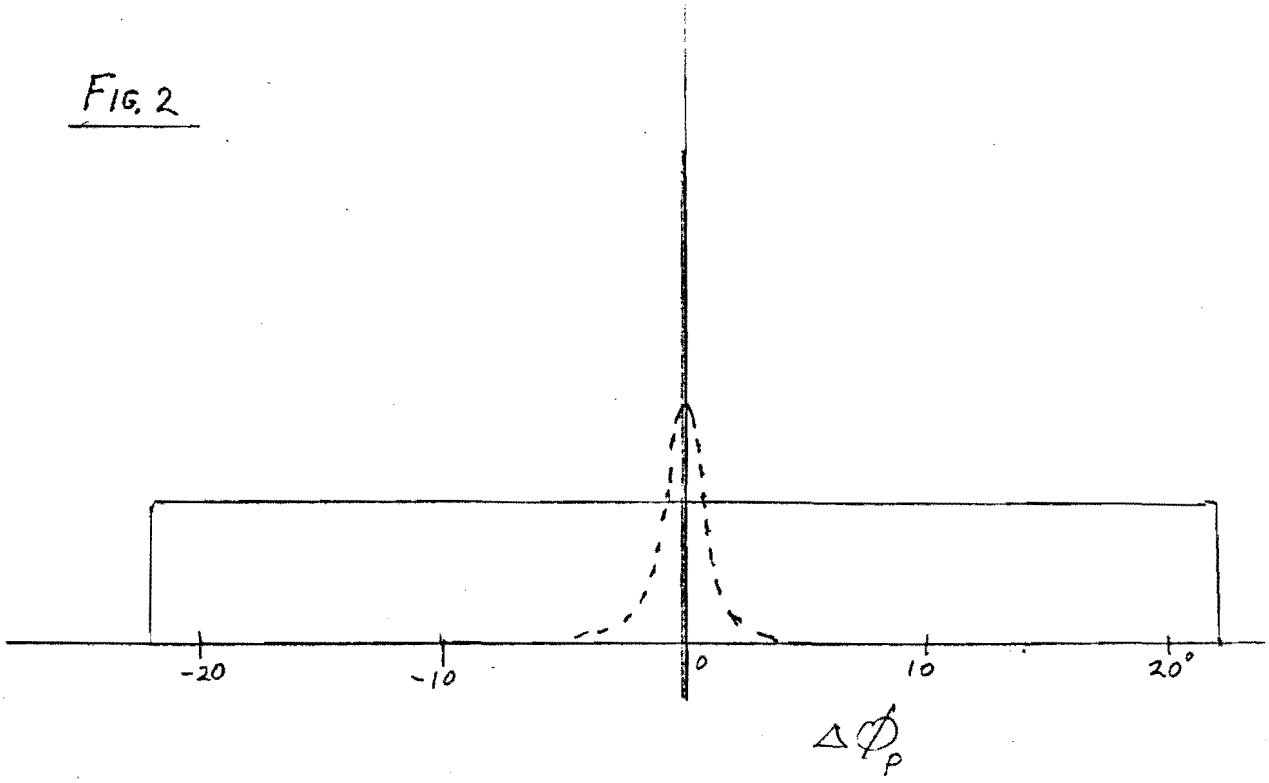

FIG. 3

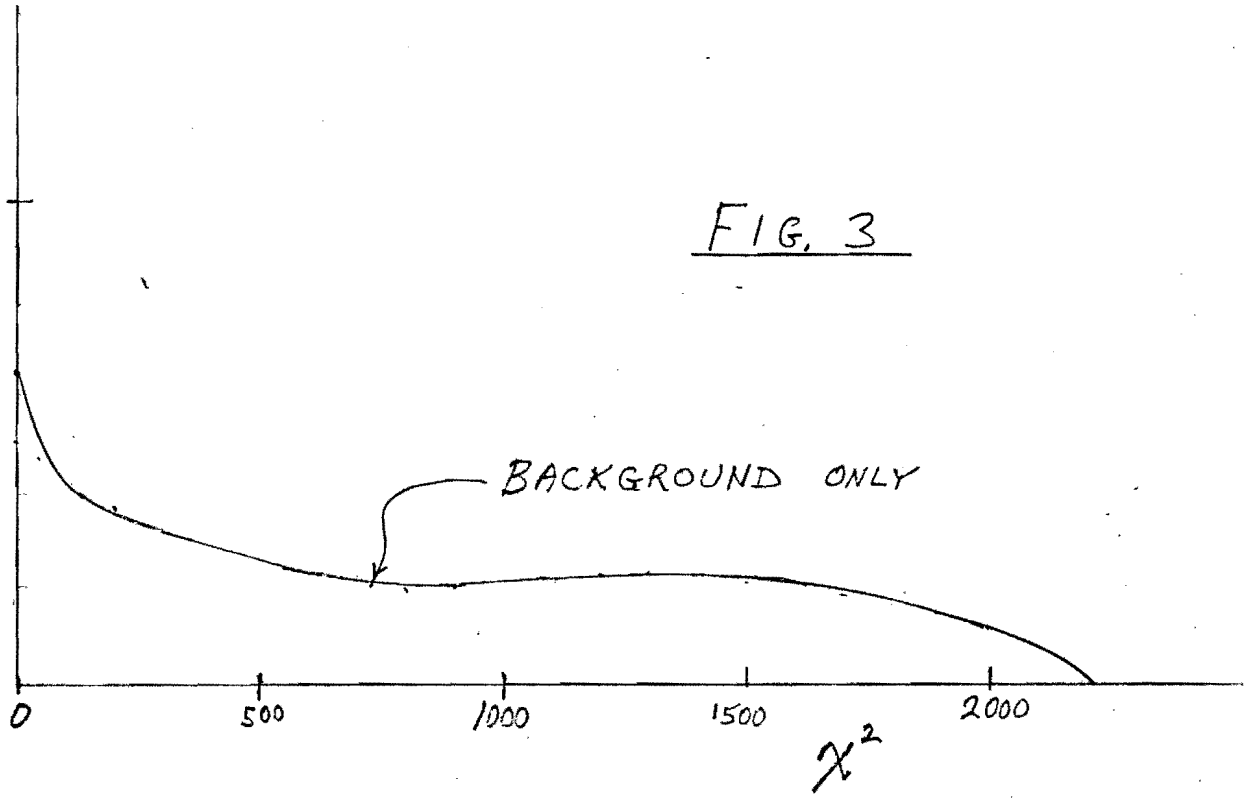
BACKGROUND ONLY
0
500
1000
1500
2000
χ^2

FIG. 4

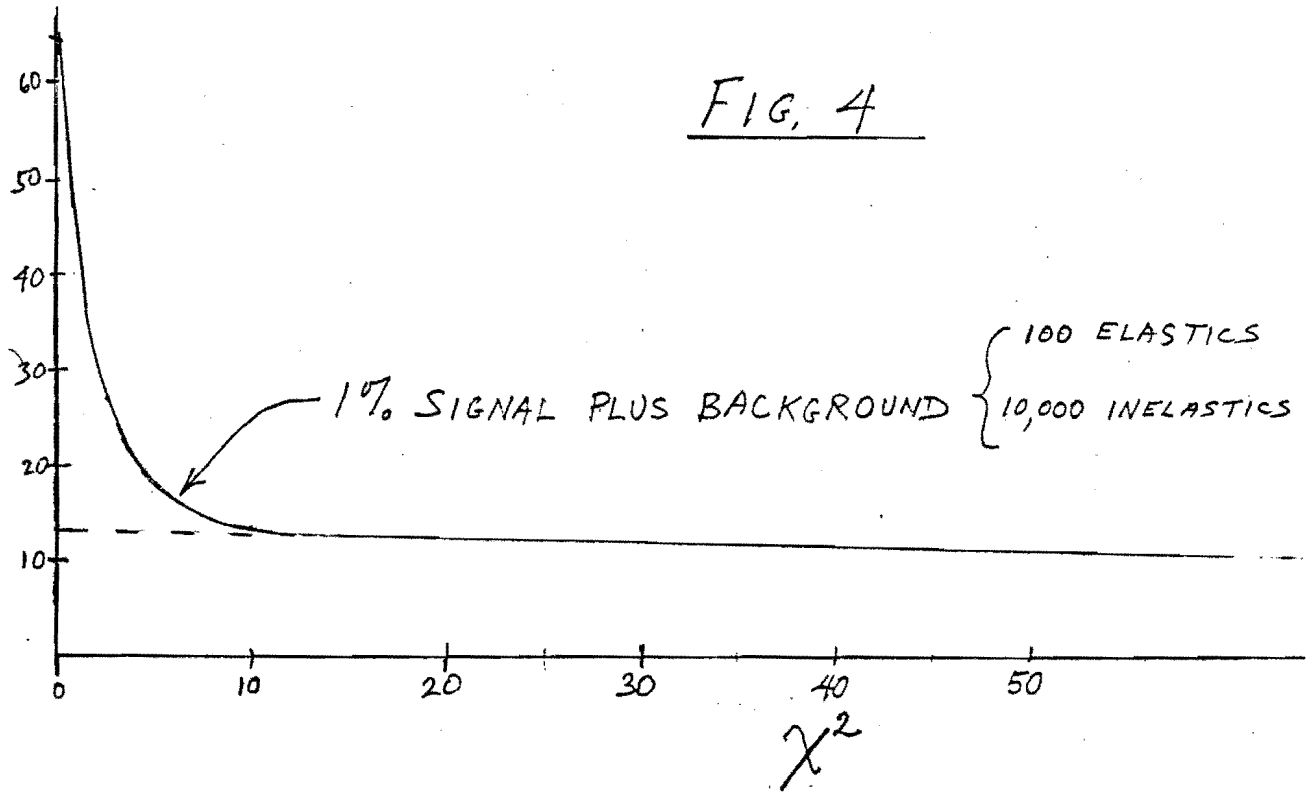
60
50
40
30
20
10
1% SIGNAL PLUS BACKGROUND
100 ELASTICS
10,000 INELASTICS
0
10
20
30
40
50
χ^2