Fermilab FERMILAB-FN-0727 February 2003

Estimate of $B(K \to \pi\nu\overline{\nu}\ )|_{SM}$ Using the Kaon Unitarity Triangle

S. H. Kettell[1], L. G. Landsberg[2], H. Nguyen[3]
[1] Brookhaven National Lab, Upton, NY, USA
[2] Institute of High Energy Physics, Serpukhov, Russia
[3] Fermi National Accelerator Lab, Batavia, IL, USA

We estimate $B(K^+ \to \pi^+\nu\overline{\nu}\ )$ in the context of the Standard Model using the 'kaon unitarity triangle' relation by fitting data on ε_K and $\sin 2\beta$ for λ_t . Our estimate is independent of the CKM matrix element V_{cb} and of B-mixing. This estimate can be compared to current and future direct measurements of $B(K^+ \to \pi^+\nu\overline{\nu}\ )$ and to predictions made from B-mixing. If discrepancies arise, this technique will help to resolve various new physics scenarios.

arXiv:hep-ph/0212321 v2 20 Dec 2002

The ultra-rare FCNC kaon decays $K^+ \to \pi^+\nu\overline{\nu}$ and $K_L^\circ \to \pi^\circ\nu\overline{\nu}$ are of particular interest as these 'gold-plated decays' can be predicted in the Standard Model framework with very high theoretical accuracy.

The $K \to \pi\nu\overline{\nu}$ decays are treated in detail in a number of papers[1, 2, 3, 4, 5, 6, 7, 8, 9, 10, 11, 12, 13, 14, 15, 16, 17, 18, 19, 20, 21, 22, 23, 24, 25, 26]. We list some of the key aspects of these decays.

a) The main contribution to these FCNC processes arises at small distances $r \sim 1/m_t, 1/m_Z$; therefore, a very accurate description for the strong interactions is possible in the framework of perturbative QCD. This analysis has been carried out in the leading logarithmic order (LLO) with corrections in the next to leading order (NLO) approximation[1].

b) The calculation of the matrix element $\langle\pi|H_w|K\rangle_{\pi\nu\bar{\nu}}$ from quark-level processes involves long-distance physics. However, these long-distance effects can be avoided by the renormalization procedure developed by Inami and Lim[2], relating the matrix element to that of the well known decay $K^+ \to \pi^\circ e^+\nu_e$ through isotopic-spin symmetry. Other possible long-distance contributions to $B(K^+ \to \pi^+\nu\overline{\nu}\ )$have been shown to be negligble[3].

c) Since the effective vertex $Zd\bar{s}$ in the diagrams of Figure 1 is short-distance, these processes are also sensitive to the contributions from new heavy objects (e.g., supersymmetric particles).

A very important step in the study of $K^+ \to \pi^+\nu\overline{\nu}$ was achieved by the E787 experiment[4] at BNL in which two clean events were found in favorable background conditions, indicating a branching ratio of $B(K^+ \to \pi^+\nu\overline{\nu}\ )|_{EXP}$ $= 15.7^{+17.5}_{-8.2} \times 10^{-11}$. This observation has opened the door for future more precise study of the $K^+ \to \pi^+\nu\overline{\nu}$ decay[5, 6].

In the Standard Model, the $K^+ \to \pi^+\nu\overline{\nu}$ decay is described by penguin and box diagrams presented in Figure 1. The partial widths have the form:

$$\begin{aligned}\Gamma(K^+ \to \pi^+\nu\overline{\nu}\ ) &= \kappa^+ \cdot |\lambda_c F(x_c) + \lambda_t X(x_t)|^2 \\ &= \kappa^+ \cdot [(Re\lambda_c F(x_c) + Re\lambda_t X(x_t))^2 \\ &+ (Im\lambda_c F(x_c) + Im\lambda_t X(x_t))^2] \\ &\simeq \kappa^+ \cdot [(Re\lambda_c F(x_c) + Re\lambda_t X(x_t))^2 \\ &+ (Im\lambda_t X(x_t))^2] \qquad (1)\end{aligned}$$

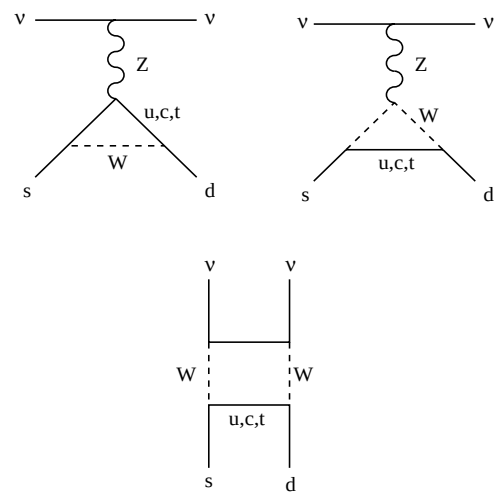

Figure 1: The dominant contributions to $K \to \pi\nu\overline{\nu}$.

where

$$\kappa^+ = \left(\frac{G_F}{\sqrt{2}}\right)^2 \cdot |\langle\pi^+\nu\bar{\nu}|H_w|K^+\rangle|^2 \cdot 3\left(\frac{\alpha}{2\pi\sin^2\vartheta_w}\right)^2$$

The factor of 3 in the expression for κ^+ results from the three flavors of neutrinos (ν_e, ν_μ, ν_r) participating in the $K^+ \to \pi^+\nu\overline{\nu}$ decays. The factors $F(x_c)$ and $X(x_t)$ are the Inami-Lim functions[2] for the loop diagrams in Figure 1. They depend on the variables $x_i = (m_i/m_W)^2$ with the masses of the $+\frac{2}{3}$ quarks, $m_i : i = c, t$. The $\lambda_i \equiv V_{id}V_{is}^*$ are vectors in the complex plane that satisfy the unitarity relation:

$$\lambda_t + \lambda_c + \lambda_u = 0 \quad (\lambda_i = V_{id}V_{is}^*\ ;\ i = u, c, t). \qquad (2)$$

This equation describes the 'kaon unitarity triangle', which can be completely determined from measurement of the three kaon decays: $K^+ \to \pi^\circ e^+\nu_e$, $K^+ \to \pi^+\nu\overline{\nu}$ and $K_L^\circ \to \pi^\circ\nu\overline{\nu}$. This triangle is highly elongated with a base to height ratio of ~1000.

The QCD LLO and NLO corrections to the Inami-Lim functions have been evaluated[1, 7, 8, 9, 10]. With current data (see Table I) we fix $F(x_c) = (9.8 \pm 1.4) \times 10^{-4}$ and $X(x_t) = 1.53 \pm 0.05$ (the accuracy of QCD calculations improves with increasing quark mass). The c-quark contribution in (1) is smaller than the t-quark contribution, but is non-negligible. Although $F(x_c)/X(x_t) \sim 10^{-3}$, the $Re(\lambda_c)$ is much larger than ($Re\lambda_t$ and $Im\lambda_t$). $Re\lambda_c \sim \lambda$ while $Re\lambda_t$, $Im\lambda_t$ and $Im\lambda_c$ are less than λ^5).

For the CP-violating[11, 12] $K_L^\circ \to \pi^\circ \nu\overline{\nu}$ decay

$$\begin{aligned}\Gamma(K_L^\circ \to \pi^\circ \nu\overline{\nu}\ ) &\simeq \frac{1}{2}|A(K^0 \to \pi^0\nu\bar{\nu}) - A(\bar{K}^0 \to \pi^0\nu\bar{\nu})|^2 \\ &= \kappa^0 \cdot \frac{1}{2}|\lambda_c F(x_c) + \lambda_t X(x_t) - h.c.|^2 \\ &= \kappa^0 \cdot 2\,[Im\lambda_c F(x_c) + Im\lambda_t X(x_t)]^2 \\ &\simeq \kappa^0 \cdot 2\,[Im\lambda_t X(x_t)]^2 \qquad (3)\end{aligned}$$

where

$$\kappa^0 = \left(\frac{G_F}{\sqrt{2}}\right)^2 \cdot |\langle\pi^0\nu\bar{\nu}|H_w|K^0\rangle|^2 \cdot 3\left(\frac{\alpha}{2\pi\sin^2\vartheta_w}\right)^2$$

There is no c-quark contribution since $Im\lambda_c F(x_c) \ll Im\lambda_t X(x_t)$.

The partial width for the well-known decay mode $K^+ \to \pi^\circ e^+\nu_e$ is given by:

$$\Gamma(K^+ \to \pi^\circ e^+\nu_e\ ) = \left(\frac{G_F}{\sqrt{2}}\right)^2 |V_{us}|^2 |\langle\pi^0 e^+\nu_e|H_w|K^+\rangle|^2$$

As mentioned above, one can relate this to $\langle\pi^+\nu\bar{\nu}|H_w|K^+\rangle$ and $\langle\pi^0\nu\bar{\nu}|H_w|K^0\rangle$ with the help of isotopic-spin symmetry:

$$\left|\frac{\langle\pi^+\nu\bar{\nu}|H_w|K^+\rangle}{\langle\pi^0 e^+\nu_e|H_w|K^+\rangle}\right|^2 = \left|\frac{\langle\pi^+|H_w|K^+\rangle}{\langle\pi^0|H_w|K^+\rangle}\right|^2 = 2r_+, \qquad (4)$$

$$\left|\frac{\langle\pi^0\nu\bar{\nu}|H_w|K^0\rangle}{\langle\pi^0 e^+\nu_e|H_w|K^+\rangle}\right|^2 = \left|\frac{\langle\pi^0|H_w|K^0\rangle}{\langle\pi^0|H_w|K^+\rangle}\right|^2 = r_0. \qquad (5)$$

The factor 2 in (4) accounts for the pion quark structure $|\pi^0\rangle = \frac{1}{\sqrt{2}}|u\bar{u} - d\bar{d}\rangle$ and $|\pi^+\rangle = |u\bar{d}\rangle$. The factors $r_+ = 0.901$ and $r_0 = 0.944$ arise from the phase space corrections and the breaking of isotopic symmetry[13].

Hence from (1), (4) and (5) the branching ratio for the $K^+ \to \pi^+\nu\overline{\nu}$ decay is

$$\begin{aligned}&B(K^+ \to \pi^+\nu\overline{\nu}\ )|_{SM} = R_+ \cdot \tfrac{X(x_t)^2}{\lambda^2} \\ &\cdot\left\{[Re\lambda_c f\tfrac{F(x_c)}{X(x_t)} + Re\lambda_t]^2 + [Im\lambda_t]^2\right\} \qquad (6)\end{aligned}$$

where

$$\left.\begin{aligned}R_+ &= B(K^+ \to \pi^\circ e^+\nu_e\ ) \cdot \tfrac{3\alpha^2}{2\pi^2\sin^4\vartheta_w} \cdot r_+ \\ &= 7.50 \times 10^{-6} \\ f\tfrac{F(x_c)}{X(x_t)} &= (6.61 \pm 0.95) \times 10^{-4} \\ f &= 1.03 \pm 0.02\end{aligned}\right\} \qquad (7)$$

Here, f is an additional correction factor to the c-quark term to take into account non-perturbative effects of dimension-8 operators[14]. The branching ratio for the $K_L^\circ \to \pi^\circ\nu\overline{\nu}$ decay is

$$B(K_L^\circ \to \pi^\circ\nu\overline{\nu}\ )|_{SM} = R_0 \cdot \frac{X(x_t)^2}{\lambda^2}[Im\lambda_t]^2 \qquad (8)$$

with

$$\begin{aligned}R_0 &= R_+ \cdot \frac{r_0}{r_+} \cdot \frac{\tau(K_L^0)}{\tau(K^+)} = 3.28 \times 10^{-5} \\ r_0/r_+ &= 1.048 \qquad \tau(K_L^0)/\tau(K^+) = 4.17\end{aligned}$$

The intrinsic theoretical uncertainty of the SM prediction for $B(K^+ \to \pi^+\nu\overline{\nu}\ )|_{SM}$ is $\sim 7\%$ and is limited by the c-quark contribution, whereas for $B(K_L^\circ \to \pi^\circ\nu\overline{\nu}\ )|_{SM}$ the uncertainty is 1–2%. In practice the uncertainties of numerical evaluations of the $K \to \pi\nu\overline{\nu}$ branching ratios are dominated by the current uncertainties in the CKM matrix parameters.

The parameters $Im\lambda_t$, $Re\lambda_t$, $Re\lambda_c$ can be estimated within the standard unitarity triangle (UT) framework using the improved Wolfenstein parameterization[15] $\bar{\eta}$, $\bar{\rho}$, A, and λ (with $A\lambda^2 = |V_{cb}|, \bar{\rho} \equiv \rho(1 - \frac{\lambda^2}{2})$ and $\bar{\eta} \equiv \eta(1 - \frac{\lambda^2}{2})$). In these variables the CKM quark matrix is

$$\begin{aligned}V_{CKM} &= \begin{pmatrix} V_{ud} & V_{us} & V_{ub} \\ V_{cd} & V_{cs} & V_{cb} \\ V_{td} & V_{ts} & V_{tb}\end{pmatrix} \qquad (9) \\ &= \begin{pmatrix} 1 - \frac{\lambda^2}{2} & \lambda & A\lambda^3(\rho - i\eta) \\ -\lambda & 1 - \frac{\lambda^2}{2} & A\lambda^2 \\ A\lambda^3(1 - \rho - i\eta) & -A\lambda^2 & 1\end{pmatrix} \\ &+ O(\lambda^4)\end{aligned}$$

and

$$\left.\begin{aligned}Re\lambda_c &\simeq -\lambda\left(1 - \tfrac{\lambda^2}{2}\right) + O(\lambda^5) \\ Re\lambda_t &= -A^2\lambda^5\left(1 - \tfrac{\lambda^2}{2}\right)(1 - \bar{\rho}) + O(\lambda^7) \\ Im\lambda_t &= \eta A^2\lambda^5 + O(\lambda^9)\end{aligned}\right\} \qquad (10)$$

The current values of these and other parameters used in this paper can be found in Table I. Using (10) and Table I, equations (6) and (8) can be naively solved to give the branching ratios for $K^+ \to \pi^+\nu\overline{\nu}$ and $K_L^\circ \to \pi^\circ\nu\overline{\nu}$:

$$
\begin{aligned}
B(K^+ \to \pi^+ \nu\overline{\nu}\,)|_{SM} &= R_+ \cdot A^4 \lambda^8 X(x_t)^2 \cdot \left\{ \frac{1}{\sigma}[(\rho_0 - \bar{\rho})^2 + (\sigma\bar{\eta})^2] \right\} \\
&= R_+ \cdot |V_{cb}|^4 X(x_t)^2 \cdot \left\{ \frac{1}{\sigma}[(\rho_0 - \bar{\rho})^2 + (\sigma\bar{\eta})^2] \right\} \\
&= 7.50 \times 10^{-6} \cdot [2.88 \times 10^{-6} \pm (19.4\%)][2.34 \pm (6.5\%)]\{1.43 \pm (19\%)\} \\
&= [7.23 \pm (28\%)] \times 10^{-11} = [7.2 \pm 2.0] \times 10^{-11}
\end{aligned} \tag{11}
$$

$$
\begin{aligned}
B(K_L^\circ \to \pi^\circ \nu\overline{\nu}\,)|_{SM} &= R_0 \cdot A^2 \lambda^8 X(x_t)^2 \cdot \{\sigma\bar{\eta}^2\} \\
&= R_0 \cdot |V_{cb}|^4 X(x_t)^2 \cdot \{\sigma\bar{\eta}^2\} \\
&= 3.28 \times 10^{-5} \cdot [2.88 \times 10^{-6} \pm (19.4\%)][2.34 \pm (6.5\%)] \cdot \{0.129 \pm (28.6\%)\} \\
&= [2.8 \pm (35\%)] \times 10^{-11} = [2.8 \pm 1.0] \times 10^{-11}
\end{aligned} \tag{12}
$$

with $\rho_0 = 1 + \Delta = 1 + fF(x_c)/(|V_{cb}|^2 X(x_t)) = 1.39 \pm 0.07$ and $\sigma = 1/(1 - \frac{1}{2}\lambda^2)^2 = 1.051$.

The uncertainties of $B(K \to \pi\nu\overline{\nu}\,)$ in (11) and (12) are dominated by the current uncertainties in the CKM parameters (see Reference 27) and are significantly larger than the intrinsic theoretical uncertainties. The uncertainty of $|V_{cb}|$ is quite significant in the evaluation of $B(K \to \pi\nu\overline{\nu}\,)$ due to the $|V_{cb}\,|^4$ dependence. CLEO has recently measured[28] a somewhat higher $|V_{cb}|$ value of $(46.9 \pm 3.0) \times 10^{-3}$, which would cause a significant increase to (11) and (12).

The numerical solutions of equations (11) and (12) do not include correlations between $\bar{\rho}$, $\bar{\eta}$, and V_{cb} . Rather, these calculation are used to demonstrate the influence of different factors in the calculation of B$(K \to \pi\nu\overline{\nu}\,)$. An evaluation[10] employing a scanning method and conservative errors for V_{CKM} obtained the following values: $B(K^+ \to \pi^+ \nu\overline{\nu}\,) = (7.5 \pm 2.9) \times 10^{-11}$ and $B(K_L^\circ \to \pi^\circ \nu\overline{\nu}\,) = (2.6 \pm 1.2) \times 10^{-11}$. A more recent evaluation with similar CKM inputs, but employing a Gaussian fit obtained $B(K^+ \to \pi^+ \nu\overline{\nu}\,) = (7.2 \pm 2.1) \times 10^{-11}$[16]. This value is not very different from (11). In some recent analyses[17, 18, 19, 20] the effects of correlations are clearly seen and increase the precision on $B(K \to \pi\nu\overline{\nu}\,)$.

A more aggressive approach for the evaluation of errors of $|V_{cb}|$ and the other constraints on standard UT[21, 22] can significantly increase the precision for $B(K \to \pi\nu\overline{\nu}\,)$. Solving equations (11) and (12) with these values for CKM parameters[10] gives $B(K^+ \to \pi^+ \nu\overline{\nu}\,) = (7.6 \pm 1.2) \times 10^{-11}$ and $B(K_L^\circ \to \pi^\circ \nu\overline{\nu}\,) = (2.9 \pm 0.5) \times 10^{-11}$. However, given the unclear situation with $|V_{cb}|$ and ξ, the SU(3) breaking correction to B-mixing, the more conservative approach of Reference 27 seems better justified.

Fitting to all data will provide the best precision on $B(K^+ \to \pi^+ \nu\overline{\nu}\,)$, but as we will demonstrate, the precision on $B(K^+ \to \pi^+ \nu\overline{\nu}\,)$ from ε_K and $\sin 2\beta$ alone is currently competitive and has the advantage of simplicity (with no dependence on $|V_{cb}|$).

In this work we directly evaluate $Re\lambda_t$ and $Im\lambda_t$ to calculate $B(K \to \pi\nu\overline{\nu}\,)$ from (6) and (8). This approach has been discussed in the literature[23, 24], but as far as we know, no calculations of $B(K \to \pi\nu\overline{\nu}\,)$ exist by this method. In order to minimize uncertainty from $|V_{cb}|$, it is natural to consider ε_K and $\sin 2\beta$ in terms of the kaon UT. We recall that $\lambda_u = V_{ud}V_{us}^* \simeq \lambda(1 - \frac{1}{2}\lambda^2)$ is real, and $\lambda_c = V_{cd}V_{cs}^*$ has a very small complex phase $\varphi(\lambda_c) \simeq \frac{Im\lambda_c}{Re\lambda_c} \simeq \eta A^2 \lambda^4 \simeq 6 \times 10^{-4}$. The angle (β_K) between λ_t and λ_u is

$$
\begin{aligned}
\beta_K &= \pi - \varphi(V_{td}V_{ts}^*) = \pi - \varphi(V_{td}) + \varphi(V_{ts}) = \beta + 1.0^\circ \\
&= (24.6 \pm 2.3)^\circ
\end{aligned} \tag{13}
$$

The phase of V_{ts} is $ImV_{ts}/ReV_{ts} \simeq \eta\lambda^2 = 0.0172 = \pi + 1.0^\circ$. The phase of V_{td} is $\varphi(V_{td}) = -\beta$. The angle β is measured precisely and in a theoretically-clean fashion in the CP asymmetry of $B_d^\circ \to J/\psi K^\circ$ decays: $\sin 2\beta = 0.734 \pm 0.054$[29]. The preferred solution is $\beta = (23.6 \pm 2.3)^\circ$.

In the Standard Model, the apex of the kaon UT (λ_t^a) is constrained by the measurements as shown in Figure 2 (without errors). The constraint from ε_K is expressed as[7, 8, 9]

$$
\begin{aligned}
|\varepsilon_k| &= L \cdot \hat{B}_k Im\lambda_t \cdot \{Re\lambda_c[\eta_{cc}S_0(x_c) - \eta_{ct}S_0(x_c; x_t)] \\
&\quad - Re\lambda_t \cdot \eta_{tt} \cdot S_0(x_t)\}
\end{aligned} \tag{14}
$$

with parameters as shown in Table I. We can find the apex of the kaon UT as the intercept of the ε_K curve with the line representing the constraint from $\sin 2\beta$:

$$
Im\lambda_t = -\tan\beta_K \cdot Re\lambda_t = (-0.458 \pm 0.049) \cdot Re\lambda_t \tag{15}
$$

To calculate a probability density function (PDF) for λ_t^a, we follow the Bayesian approach of References 21 and 22. Let $f(\mathbf{x})$ be the PDF for $\mathbf{x}$, where $\mathbf{x}$ is a point in the space of $(\beta_K,\ \varepsilon_K\ ,\ \hat{B}_K,\ m_t,\ m_c,\ ...)$. Equations (14) and (15)

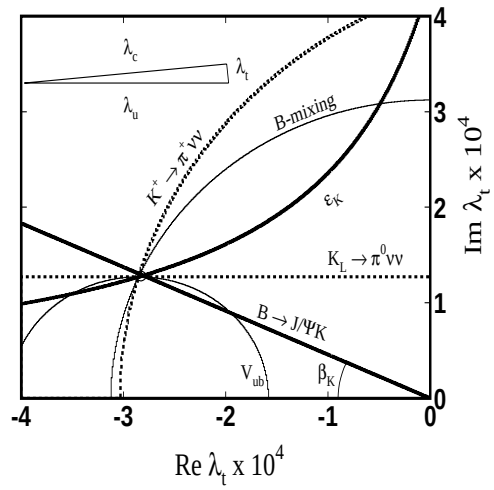

Figure 2: The apex (λ_t^a) of the kaon unitarity triangle (no errors are shown). The circle labeled V_{ub} is described by (20), which uses the standard unitarity relation, and has a radius R$\sim V_{cb}\ V_{ub}$. The thick black lines (ε_K and $\sin 2\beta$) illustrate the constraints used in this paper. The dashed lines illustrate the constraints from $K \to \pi\nu\overline{\nu}$. The inset shows the triangle not drawn to scale.

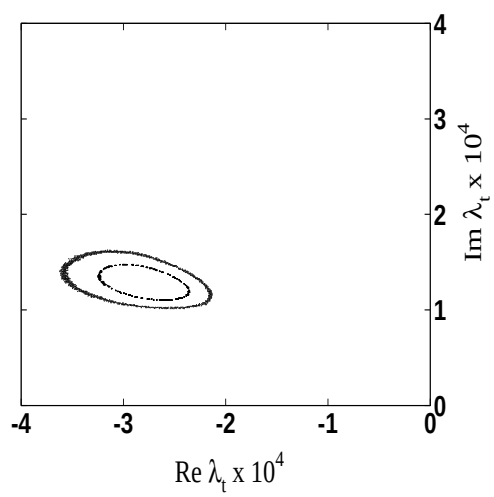

Figure 3: 1 σ and 2 σ C.L. intervals on λ_t^a, obtained from the measurements of ε_K and $\sin 2\beta$.

define the mapping from $\mathbf{x}$ to λ_t^a. Through these equations and $f(\mathbf{x})$, we derive $f(\lambda_t^a)$, the PDF for λ_t^a. We make the usual assumption that $f(\mathbf{x})$ is the product of the PDF's for the components of $\mathbf{x}$. The component PDF's are taken from Table I, and are assumed to be uncorrelated.

Figure 3 shows the PDF for λ_t^a. We find the following central values:

$$\left.\begin{array}{r} Re\lambda_t^a = (-2.85 \pm 0.29) \times 10^{-4} \\ Im\lambda_t^a = (1.30 \pm 0.12) \times 10^{-4} \end{array}\right\} \qquad (16)$$

For $B(K^+ \to \pi^+\nu\overline{\nu}\ )|_{SM}$ we obtain from Equations (6),

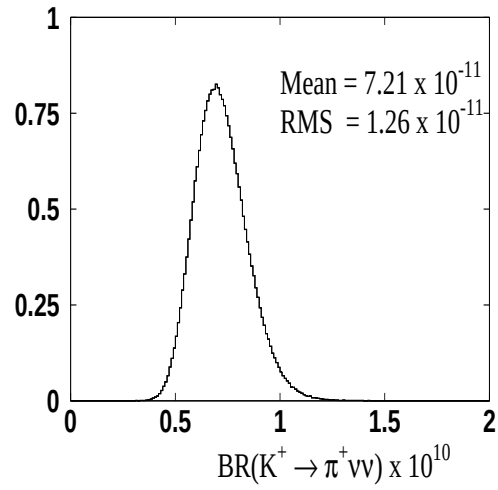

Figure 4: The PDF for $B(K^+ \to \pi^+\nu\overline{\nu}\ )|_{SM}$, obtained from the measurements of ε_K and $\sin 2\beta$. The 95% C.L. upper limit is 9.5×10^{-11} and 95% C.L. lower limit is 5.4×10^{-11}.

(8) and (16):

$$\begin{aligned} B(K^+ \to \pi^+\nu\overline{\nu}\ )|_{SM} &= R_+ \frac{X^2(x_t)}{\lambda^2} \cdot \\ &\left\{ \left[Re\lambda_c f \frac{F(x_c)}{X(x_t)} - Re\lambda_t^a \right]^2 + [Im\lambda_t^a]^2 \right\} \\ &= (7.21 \pm 1.26) \times 10^{-11} \qquad (17) \end{aligned}$$

The probability distribution for $B(K^+ \to \pi^+\nu\overline{\nu}\ )$ is presented in Figure 4. For $K_L^\circ \to \pi^\circ\nu\overline{\nu}$ we obtain from (8), (9), and (16):

$$\begin{aligned} B(K_L^\circ \to \pi^\circ\nu\overline{\nu}\ )|_{SM} &= R_0 \frac{X(x_t)^2}{\lambda^2} [Im\lambda_t^a]^2 \\ &= (2.66 \pm 0.54) \times 10^{-11} \qquad (18) \end{aligned}$$

The results of new calculations (17) and (18) of $K \to \pi\nu\overline{\nu}$ branching ratios with the kaon unitarity triangle variables are in a good agreement with the calculations in the standard unitarity triangle variables (11) and (12) but are free of uncertainties in $|V_{cb}|$. The main source of the uncertainties in (17) and (18) are the lattice calculations of the value of $\hat{B}_k = 0.86 \pm 0.15$ and $m_c = 1.3 \pm 0.1$ GeV/c^2. (We note that some recent lattice calculations using domain-wall fermions[17, 30, 31] find values of $\hat{B}_k$ that are 10–15% lower than the world average[32, 33] that we use in Table I.) If future lattice QCD calculations[34] can significantly reduce the uncertainty in $\hat{B}_k$, a corresponding improvement in $B(K \to \pi\nu\overline{\nu}\ )|_{SM}$ will be possible.

Given that it is difficult to assign PDF's to theoretical uncertainties, we explore here the influence of $\hat{B}_k$ and m_c on $B(K^+ \to \pi^+\nu\overline{\nu}\ )$ using a scanning technique while keeping other theoretical uncertainties gaussian. We take the extremal values for $\hat{B}_k$ to be 0.72 and 1.00, and m_c to be 1.2 and 1.4 GeV/c^2. For $\hat{B}_k$=0.72 and m_c=1.4, we find $B(K^+ \to \pi^+\nu\overline{\nu}\ ) < 10.4 \times 10^{-11}$ at 95% CL. For $\hat{B}_k$=1.00 and m_c=1.2, we find $B(K^+ \to \pi^+\nu\overline{\nu}\ ) > 5.0 \times 10^{-11}$ at 95%

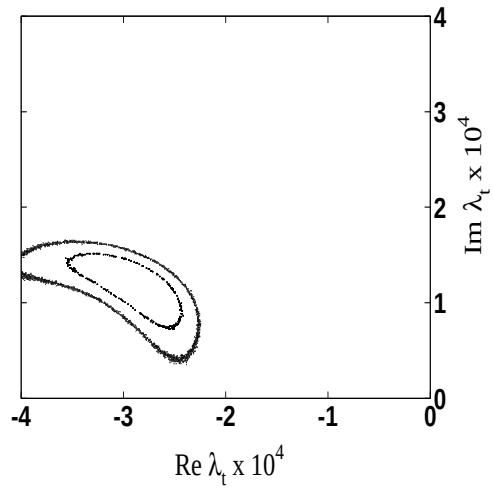

Figure 5: 1 σ and 2 σ C.L. intervals on λ_t^a, obtained from the measurements of B_d-mixing and $|V_{ub}|$.

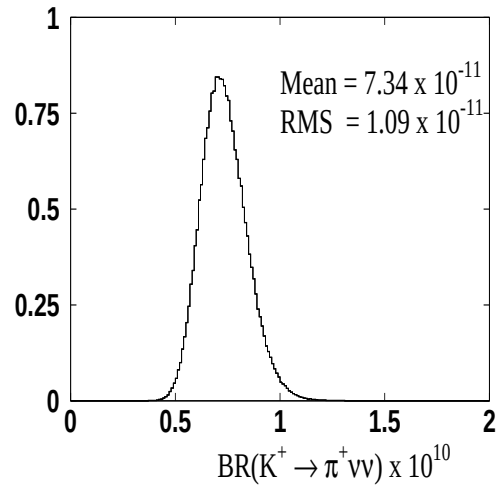

Figure 6: The PDF for $B(K^+ \to \pi^+ \nu\overline{\nu})|_{SM}$, obtained from the measurements of ε_K , $\sin 2\beta$, B_d-mixing, and $|V_{ub}|$.

CL. These limits are not much worse than those derived from Figure 4.

We've emphasized that our estimate uses only $\sin 2\beta$ and $|\varepsilon_K|$. Nevertheless, it is interesting to consider how the measurements of B_d-mixing and $|V_{ub}|$ would constrain λ_t^a. From the following relations:

$$\begin{aligned} \Delta m_{B_d} &= \frac{G_F}{6\pi^2} M_W^2 m_{B_d} f_{B_d}^2 \hat{B}_{B_d} \eta_{B_d} S_0(x_t) |V_{td} V_{tb}^*|^2 \\ 0 &= V_{ud} V_{ub}^* + V_{cd} V_{cb}^* + V_{td} V_{tb}^* \end{aligned}$$

and using the approximations of (9): $V_{tb}^* \approx 1$, $V_{us} = \lambda$, $V_{ud} \approx (1-\lambda^2/2)$, and $V_{cb} \approx -V_{ts}$, we convert the equations above into:

$$\Delta m_{B_d} = \frac{G_F}{6\pi^2} M_W^2 m_{B_d} f_{B_d}^2 \hat{B}_{B_d} \eta_{B_d} S_0(x_t) \frac{|\lambda_t|^2}{|V_{cb}|^2} \qquad (19)$$

$$|\lambda_t| = |V_{ub}^* V_{cb}^* (1 - \lambda^2/2) - \lambda (V_{cb}^*)^2| \qquad (20)$$

These two equations describe two circles whose intersections contain the apex of the kaon UT (see Fig. 2), and are correlated somewhat through V_{cb} . Similar to the case of $\hat{B}_K$, there are significant theoretical uncertainties in B_d-mixing, and the extraction of $|V_{ub}|$ and $|V_{cb}|$. The uncertainty in B-mixing will presumably be significantly improved by the addition of B_s-mixing, once the current confusing situation with ξ is resolved (this will be further improved once B_s-mixing is actually observed). Using the Bayesian procedure described earlier and the parameters in Table I, the PDF for λ_t^a derived solely from B_d-mixing and $|V_{ub}|$ is shown in Fig. 5. We see that this PDF does not constrain the kaon UT apex as well as $\sin 2\beta$ and $|\varepsilon_K|$. Combining all four constraints, we get the PDF for $B(K^+ \to \pi^+ \nu\overline{\nu})$ shown in Fig. 6, which is only slightly more precise than Fig. 4.

Until recently the only observation of CP-violation had been in the K system. With the recent observation of CP-violation in the B-system, and the rather precise values of $\sin 2\beta = 0.734 \pm 0.054$ now available from the B-factories[29] in good agreement with $\sin 2\beta = 0.715^{+0.055}_{-0.045}$, obtained by fits to $\bar{\rho}$ and $\bar{\eta}$ using all other experimental information[21], the SM picture of CP-violation has received a significant validation. This agreement is important because the latter value of $\sin 2\beta$ includes B-mixing and ε_K , which are sensitive to loop FCNC processes, where the possibility of new physics is more likely than that of tree processes such as $B_d^\circ \to J/\psi K^\circ$.

Thus far, the CKM description appears to be the dominant source of CP violation. However, there are new physics scenarios that preserve the equality between $\sin 2\beta$ as measured from $B_d^\circ \to J/\psi K^\circ$ and global CKM fits, but allow for a significantly different $B(K \to \pi\nu\overline{\nu})$[35]. Therefore, a crucial test of the CKM description will be to compare β derived from $B(K \to \pi\nu\overline{\nu})$ to that from $B_d^\circ \to J/\psi K^\circ$. The most important new information on the CKM matrix will be measurements of $B(K^+ \to \pi^+ \nu\overline{\nu})$[6] and $B(K_L^\circ \to \pi^\circ \nu\overline{\nu})$[36] to 10% precision. The combination of these, in context of the SM, will determine $\sin 2\beta$ to 0.05[1, 9, 10, 21], competitive with the current uncertainty on $\sin 2\beta$. If the measurement of this angle obtained from B($K \to \pi\nu\overline{\nu}$) is consistent with that of $B_d^\circ \to J/\psi K^\circ$, this would provide very strong support for the SM description of CP-violation.

Another critical test of the SM will be comparison of $|V_{td}|$ from $K^+ \to \pi^+ \nu\overline{\nu}$ and $\Delta M_{B_s}/\Delta M_{B_d}$. Currently, the E787 measurement of $B(K^+ \to \pi^+ \nu\overline{\nu}) = 15.7^{+17.5}_{-8.2} \times 10^{-11}$ is consistent with the SM expectation, but the central experimental value exceeds it by a factor of two. To date there is only a limit on B_s-mixing, but it is likely to be observed soon at the Tevatron. Until B_s-mixing is observed, the limit can be used to set an upper limit on

$B(K^+ \to \pi^+ \nu\overline{\nu}\,)$[1]. A recent calculation of this limit[16] gives $B(K^+ \to \pi^+ \nu\overline{\nu}\,)|_{\rm SM} < 13.2 \times 10^{-11}$, which is below the current experimental value[4]. This work used a value of $\xi = 1.15 \pm 0.06$, whereas recent work would suggest a higher value[17, 18, 37]. A value of $\xi = 1.32 \pm 0.10$ as suggested by Reference 37 would raise the upper limit to 15.5×10^{-11}. The theoretical situation with ξ will hopefully be resolved soon. Reference 16 considered possible new physics scenarios in the $s \to d\nu\bar{\nu}$ transition or $B-$mixing. If a disagreement persists, we have outlined a procedure using only ε_K and $\sin 2\beta$ to ascertain which sector K or B is influenced by new physics.

Our work is an estimation of $B(K^+ \to \pi^+ \nu\overline{\nu}\,)|_{\rm SM}$ based solely on ε_K and $\sin 2\beta$ and is not dependent on $|V_{cb}|$ or B-mixing. Our 95% C.L. upper limit is 9.5×10^{-11} and the single large systematic error of this approach is $\hat{B}_K$. The current experimental value is a little less than 1σ above this limit. The uncertainty from our prediction is comparable to the expected experimental uncertainties that might be achieved in the future measurements of $K^+ \to \pi^+ \nu\overline{\nu}$ [5, 6]. An experimental measurement significantly larger than our SM limit of $B(K^+ \to \pi^+ \nu\overline{\nu}\,) \leq 10 \times 10^{-11}$ will be a clear signal of new physics in either the $s \to d\nu\bar{\nu}$ transition or $K-$mixing.

ACKNOWLEDGMENTS

We would like to thank P. Cooper, P. Mackenzie, U. Nierste, A. Soni and D. Jaffe for useful discussions and W. Marciano for the original stimulation to perform this type of calculation. This work was in part supported by the U.S. Department of Energy through contract #DE-AC02-98CH10886 and in part by the Fermilab Particle Physics Division.

NOTE

During the final preparation of this work for publication we found that Reference 39 considered fitting for the apex of the UT from the CP-violating data only, as we do in Figure 3. However, Reference 39 used $(\bar{\rho}, \bar{\eta})$, which is dependent on $|V_{cb}|$ and is not as suitable for analysis of $K \to \pi\nu\overline{\nu}$.

Table I: Some SM and CKM matrix parameters used for evaluation of $B(K \to \pi\nu\overline{\nu}\,)|_{SM}$ (see [9, 10, 27]). The subscript G(U) denote the Gaussian(Uniform) probability density distribution for the errors. Errors shown without subscripts are assumed to be Gaussian.

$\lambda = 0.222 \pm 0.002$	PDG[27]
$\bar{\rho} = 0.22 \pm 0.10$	
$\bar{\eta} = 0.35 \pm 0.05$	
$\lvert V_{cb}\rvert = (41.2 \pm 2.0) \cdot 10^{-3}$	
$A = \lvert V_{cb}\rvert/\lambda^2 = 0.836 \pm 0.044$	
$\bar{\rho} = 0.173 \pm 0.046$	[21, 22, 39]
$\bar{\eta} = 0.357 \pm 0.027$	
$\lvert V_{cb}\rvert = (40.9 \pm 0.8) \cdot 10^{-3}$	
$\beta_K = \beta + 1^\circ = (24.6 \pm 2.3)^\circ$	
$\lvert\varepsilon_K\rvert = (2.282 \pm 0.017) \cdot 10^{-3}$	
$\hat{B}_k = 0.86 \pm 0.06_{\rm G} \pm 0.14_{\rm U}$	
$m_t = \bar{m}_t = 166 \pm 5{\rm GeV/c^2}$	
$m_c = \bar{m}_c = 1.3 \pm 0.1{\rm GeV/c^2}$	
$X(x_t) = 1.53 \pm 0.05$	Inami – Lim functions for $K \to \pi\nu\bar{\nu}$
$F(x_c) = \frac{2}{3}X^e_{NL}(x_c) + \frac{1}{3}X^\tau_{NL}(x_c)$	
$= (9.82 \pm 1.36) \cdot 10^{-4}$	
$f = 1.03 \pm .02$	
$f \cdot F(x_c)/X(x_t) = (6.61 \pm 0.95) \cdot 10^{-4}$	
$S_0(x_c) = (2.42 \pm 0.39) \cdot 10^{-4}$	
$S_0(x_c, x_t) = (2.15 \pm 0.31) \cdot 10^{-3}$	Inami – Lim functions and QCD corrections for $K^0 \rightleftarrows \bar{K}^0$ and $\lvert\varepsilon_k\rvert$ evaluation
$S_0(x_t) = 2.38 \pm 0.11$	
$\eta_{cc} = 1.45 \pm 0.38$	
$\eta_{ct} = 0.47 \pm 0.04$	
$\eta_{tt} = 0.57 \pm 0.01$	
$L = 3.837 \times 10^{-4}$[9]	
$\lvert V_{cb}\rvert$ (incl.) $= (40.4 \pm 0.7_{\rm G} \pm 0.8_{\rm U}) \cdot 10^{-3}$	$B_d -$ mixing and $\lvert V_{ub}\rvert$ parameters used in evaluating the constraint on $\lambda_t^{\rm a}$ in Fig. 5
$\lvert V_{cb}\rvert$(excl.) $= (42.1 \pm 1.1_{\rm G} \pm 1.9_{\rm U}) \cdot 10^{-3}$	
$\lvert V_{ub}\rvert$(incl.) $= (40.9 \pm 4.6_{\rm G} \pm 3.6_{\rm U}) \cdot 10^{-4}$	
$\lvert V_{ub}\rvert$(excl.) $= (32.5 \pm 2.9_{\rm G} \pm 5.5_{\rm U}) \cdot 10^{-4}$	
$\Delta m_{B_d} = 0.489 \pm 0.008$ ps^{-1}	
$f_{B_d}\sqrt{\hat{B}_{B_d}} = 230 \pm 30_{\rm G} \pm 15_{\rm U}$ MeV	
$\xi = \frac{f_s}{f_d} \cdot \sqrt{\frac{\hat{B}_s}{\hat{B}_d}} = 1.15 \pm 0.06$	old value
$\xi = 1.32 \pm 0.10$[37]	new data with chiral log extrapolation
$\xi = 1.18 \pm 0.04^{+0.12}_{-0.0}$[33]	
$\xi = 1.22 \pm 0.07$[38]	
$\xi = 1.16 \pm 0.08$[17]	

[1] G. Buchalla and A. J. Buras, Nucl. Phys. **B412**, 106 (1994) [hep-ph/9308272]; Phys. Rev. **D54**, 6792 (1996); Nucl. Phys. **B548**, 39 (1999) [hep-ph/9901288].

[2] T. Inami and C. S. Lim, Prog. Theor. Phys. **65**, 297 (1981).

[3] J.S. Hagelin and L.S. Littenberg, Prog. Part. Nucl. Phys. **23**, 1 (1989); D. Rein and L.M. Sehgal, Phys. Rev. **D39**, 3325 (1989); M. Lu and M.B. Wise, Phys. Lett. **B324**, 461 (1994); C.Q. Geng *et al.*, Phys. Lett. **B355**, 569 (1995); S. Faijfer, Nuovo. Cim. **110A**, 397 (1997).

[4] S. Adler *et al.* Phys. Rev. Lett. **79**, 2204 (1997) [hep-ex/9708031]; S. Adler *et al.* Phys. Rev. Lett. **84**, 3768 (2000) [hep-ex/0002015]; S. Adler *et al.* Phys. Rev. Lett. **88**, 041803 (2002) [hep-ex/0111091]; S. Adler *et al.* Phys. Lett. **B537**, 9 (2002) [hep-ex/0201037].

[5] B. Bassaleck *et. al.*, BNL 949 Experiment, BNL-67247 (1999); http://www.phy.bnl.gov/e949.

[6] J. Frank *et. al.*, Fermilab Proposal for Precision Measurement of the Decay $K^+ \to \pi^+ \nu\overline{\nu}$ and Other Rare K^+ Processes at Fermilab Using the Main Injector, Fermilab, 2001; http://www.fnal.gov/projects/ckm/Welcome.html.

[7] G. Buchalla *et al.* Rev. Mod. Phys. **68**, 1125 (1996) [hep-ph/9512380].

[8] A. J. Buras and R. Fleischer, [hep-ph/9704376].

[9] A. J. Buras, [hep-ph/9806471]; [hep-ph/9905437]; [hep-ph/0101336].

[10] A. J. Buras, [hep-ph/0109197].

[11] L. Littenberg, Phys. Rev. **D39**, 3322 (1989).

[12] Y. Grossman and Y. Nir, *et al.* Phys. Lett. **B398**, 169 (1997) [hep-ph/9701313].

[13] W. Marciano and Z. Parsa, Phys. Rev. **D53**, 1 (1996).

[14] A. Falk *et al.* Phys. Lett. **B505**, 107 (2001) [hep-ph/0012099].

[15] L. Wolfenstein, Phys. Rev. Lett. **13**, 562 (1964); A. J. Buras, *et al.* Phys. Rev. **D50**, 3433 (1994) [hep-ph/9403384].

[16] G. D'Ambrosio and G. Isidori, Phys. Lett. **B350**, 108 (2002) [hep-ph/0112135].

[17] D. Atwood and A. Soni, [hep-ph/0212071].

[18] D. Atwood and A. Soni, Phys. Lett. **B508**, 17 (2001) [hep-ph/0103197].

[19] S. Laplace, [hep-ph/0209188]

[20] A. Hocker *et al.*, [hep-ph/0112295]

[21] A. J. Buras, [hep-ph/0210291].

[22] A. J. Buras *et al.*, [hep-ph/0207101].

[23] W. Marciano, p. 603 in *Kaon Physics*, ed. J.L. Rosner and B.D. Winstein, The University of Chicago Press, Chicago, 2001.

[24] A. R. Barker, S. H. Kettell, Ann. Rev. Nucl. Part. Sci. **50**, 249 (2000) [hep-ex/0009024].

[25] L. G. Landsberg, Yad. Fiz, **64**, 1811 (2001) [Engl. Tran. Phys. of Atom Nucl. **64**, 1729 (2001)].

[26] G. C. Branco *et al.* CP-violation, Clarendon Press, Oxford, 1999.

[27] Particle Data Group: K. Hagiwara *et al.*, Phys. Rev. **D66**, 010001 (2002).

[28] R. A. Briere *et al.* (CLEO), Phys. Rev. Lett. **89**, 081803 (2002).

[29] T. Affolder *et al.* (CDF), Phys. Rev. **D61**, 072005 (2000) [hep-ex/9909003]; B. Aubert *et al.* (BaBar), Phys. Rev. Lett. **89**, 201802 (2002) [hep-ex/0207042]; A. Abe *et al.* (Belle), Phys. Rev. **D66**, 071102 (2002) [hep-ex/0207098]. see also J. L. Rosner, [hep-ph/0208243].

[30] A. Ali Kahn *et al.* (CP-PACS) Phys. Rev. **D64**, 114506 (2001) [hep-lat/0105020].

[31] T. Blum *et al.* (RBC) [hep-lat/0110075] (2001).

[32] M. Gazzon *et al.*, [hep-ph/0212015]

[33] L. Lellouch, [hep-ph/0211359]

[34] P. Mackenzie, Talk on Fermilab Joint Experimental Theoretical Seminar, September 27, 2002.

[35] J.A. Aguilaz-Saavedra, [hep-ph/0210112]

[36] D.A. Bryman and L. Littenberg, Nucl. Phys. Proc. Suppl. **99B**, 61 (2001). http://pubweb.bnl.gov/users/e926/www

[37] A. S. Kronfeld and S. M. Ryan, Phys.Lett. **B543**, 59 (2002) [hep-ph/0206058].

[38] D. Becizevic, [hep-ph/02011271]

[39] A. Stocchi, [hep-ph/0211245]