Fermi National Accelerator Laboratory

FN-404
1100.000

SHIELDING CONSIDERATIONS FOR FIXED TARGET USAGE OF THE SSC*

J. D. Cossairt and A. J. Elwyn

July 1984

*Submitted to the SSC Workshop on Fixed Target Physics, The Woodlands, Texas, January 1984.

Operated by Universities Research Association Inc. under contract with the United States Department of Energy

Submitted to the
Superconducting Super Collider Workshop on
Fixed Target Physics

The Woodlands, Texas

January 26-30, 1984

SHIELDING CONSIDERATIONS FOR FIXED TARGET USAGE OF THE SSC

J.D.Cossairt and A.J.Elwyn
Fermi National Accelerator Laboratory
Batavia, Illinois 60510

(Work performed, in part, while on leave at Texas A&M University)

1. Introduction

This paper describes a preliminary investigation of some of the radiological problems associated with fixed target physics at the SSC. Areas will be suggested where more detailed studies are needed. Many of these problems are also pertinent to the collider mode as well. This report will attempt to clarify the important differences with respect to the two possible modes-pure collider and fixed target. No attention is given to shielding requirements of the train of injector accelerators since these are equivalent to existing facilities.

2. Design Criteria

In order to make meaningful comparisons it is necessary to set up "example" design criteria which include assumptions about both the nature of the accelerator operations and a choice of radiation exposure limits. If, for example, the main accelerator (20 TeV) has a circumference of 160 km (≈100 miles) and it is filled with protons for fixed target physics at the same linear density as the Fermilab Tevatron, it could hold approximately 5×10^{14} protons compared with perhaps 1×10^{14} in each beam of the same machine used as a collider. Usage of the machine in the collider mode implies the acceleration and storage of about 2×10^{16} protons per year (100 fills of both beams). In contrast, fixed target operations would presumably result in the extraction of as many protons as possible. From other contributions to this workshop[1], it would seem that a maximum of 4 spills per hour would be possible so that an 8000 hour operating year would result in an upper limit of 1.6×10^{19} protons per year being accelerated. This factor of 800 in the integrated beam will be shown to be quite important for some facets of the radiological problems, while the smaller ratio of 5 in the instantaneous beam currents (i.e., 5×10^{14} compared to 1×10^{14}) will dominate others. (It is extremely unlikely

for both beams of a collider to be lost in a way which would expose the same location outside of the shielding surrounding the ring.)

For purposes of comparison, acceptable radiation exposure limits must be defined. Consistent with practices at Fermilab, we have chosen to limit the dose equivalent to members of the general public due to operation of the SSC to 10 mrem per year from external exposure and 4 mrem per year from potential internal exposure. This presumes the site to be open to the general public with very informal access controls dictated by its vast size.

Beam losses, of course, need to be specified. Here, it is assumed that steady state losses in "unspecialized" portions of the lattice would be 1 percent of the integrated beam, uniformly distributed around the ring at the maximum energy (20 TeV). Large accidental losses of circulating beam are assumed to be limited to the dispersal of the entire intensity (at 20 TeV) over the length of a half-cell (≈ 100 m) at a random location, no more than once per year. Injected beam, of course, could be lost at any point but the rough scaling of the hadronic cascade with energy make the consequences less severe than the loss of the 20 TeV beam spread out over 100 meters. The frequency is limited by the disasterous consequences of such accident to the accelerator. Specialized beam loss areas (septa, aborts, external targets, and interacting regions) would presumably be locally shielded in accord with their usage, or have more stringent access requirements associated with the areas near them. Table 1 lists these beam loss scenarios.

3. External Shielding of the Accelerator-Hadrons

For this preliminary work the empirical method of the so-called "Moyer Model" was used.[2] For point losses of beam, the dose equivalent rate H (mrem/proton) at shield thickness d can be written as

$$H = H_o(E_p) r^{-2} e^{-\beta\theta} e^{-d/\lambda} \qquad (1)$$

where the dependence of H_o on the incident proton energy has been found by Thomas and Thomas[3] to be given by

$$H_o(E_p) = 2.8 \times 10^{-8} E_p^{0.8} \text{ mrem-m}^2$$

(E_p in GeV). Here β is the angular distribution parameter (2.3 radians^{-1}), θ is the angle between the line of sight to the loss point and the beam axis while λ is an effective attenuation length (λ_{soil} = 117 g/cm^2, λ_{iron} = 147 g/cm^2). The radial distance from the source is r (meters). For line sources and reasonable shield thickness one can obtain the form[4]:

$$H = 0.065\, H_o(E_p)\, Sr^{-1}\, e^{-1.09\, d/\lambda} \qquad (2)$$

where S is the number of protons lost per meter. Figure 1 shows a plot of hadron dose equivalent as a function of shielding thickness using Eq(2) with a soil density (2.08 g/cm^3) typical of a number of possible SSC sites. In this Figure, the hadron dose consequences of both the steady state and large loss accidents in "unspecialized" ring sections are shown. One can see that 6 meters of soil overburden is sufficient to meet the radiation limits listed above. For this calculation, it was assumed that the tunnel is made of concrete 30 cm thick (not included in the "overburden"), and has an inner diameter of 3.0 meters. It contains rectangular magnets of outer dimensions 20.3 x 25.4 cm with gap dimensions 2.5 x 7.6 cm. The magnets are assumed to be roughly centered in the enclosure. In Figure 1, it is obvious that large scale accidents dominate the shielding requirements so that the factor of five difference in instantaneous beam current implies only about 0.6 m (10%) more radial hadron shielding for the fixed target operating mode for these vast stretches of unspecialized lattice. Given the exponential behavior of shielding, the size of the increment in radial shielding is independent of the dose equivalent limit chosen. Ring diameters presently under consideration will affect these results by a maximum of 30%.

4. External Shielding of the Accelerator-Muons.

Van Ginneken has reported a muon calculation using the program CASIM for a point loss of beam on a magnet in an SSC tunnel at the Cornell workshop[5]. The results have been crudely converted to that expected for a line source in order to obtain a preliminary estimate of the muon dose equivalent to be expected both from the steady state and large losses specified above. The ratio of line source to point source values found for the hadrons using Eq (1) and (2) were used to obtain distributed source muon dose rates from Van Ginneken's point source values. Figure 2 shows the results of this rough estimate for losses in both operational modes as a function of lateral shielding thickness. It is clear again that the large loss accidents dominate and that shielding required for fixed target operation is only a small increment to that required for collider operation. It is extremely unlikely that muon and hadron dose equivalents from large loss accidents would ever sum to levels exceeding the design criteria at any single location because of the forward-peaking in the muon flux distributions.

The muon results do, however, lead to constraints on the flatness of the terrain surrounding the ring if it is minimally shielded for hadrons. In a flat ring, one must have sufficient shielding in the path of tangents from all points of the ring to range out most of the muons from small production angles. One needs a zone of width t outward from the ring free of all dips to beam level or deep cellars. For the fixed target intensity, a distance of 2.1 km of soil is needed in the forward direction to achieve the 10 mrem criterion. This implies $t = \ell^2/2R = 85$ m (R = 26 km). For the loss of 1×10^{14} protons (i.e., only one lost "collider" beam could be aimed at a given location), about 1.4 km of shielding would be needed, making t only 37 meters (for

R = 26 km). Thus this "dip free" zone may be considerably smaller for the SSC used only as a collider. Similar constraints apply to the local vertical radius of curvature in terrain-following designs. It is obvious that much more detailed muon calculations are needed to better specify these shielding requirements. Figure 3 shows the shielding necessary for unspecialized portions of the SSC used in a fixed target mode for both hadron and muon considerations.

5. Groundwater Protection

Possible contamination of groundwater with radionuclides produced near the accelerator is an important consideration. Here the steady state losses will dominate since they result in the build-up of products having relatively long half-lives. The nuclides produced in soil samples have been measured by Borak, et.al.[6] who found four (^{3}H, ^{22}Na, ^{45}Ca, and ^{54}Mn) to be leachable by water. Table 2 lists their maximum macroscopic production cross sections($\Sigma = \sum_i n_i \sigma_i$) reported by Borak, et.al. along with their leachability; that is, the fraction that can be removed from the soil by groundwater. Also given are the half-lives and the concentration limits L. The concentration limits are those that would result in an individual receiving 4 mrem/year by use of water having that concentration of the single radionuclide in his normal water supply. The presence of multiple radionuclides means that the relation,

$$\Sigma C_i/L_i < 1, \qquad (3)$$

where C_i is the concentration of the ith radionuclide, must hold to meet the design criteria above.

Here, a conservative approach is taken. We assume that the volume of soil within 1 meter of the tunnel wall is drained of water during construction and kept drained thereafter by sumps. This appears to be prudent for other reasons (e.g., prevention of tunnel flooding). Zone A of Figure 3 is the drained volume. The presence of drainage in this region implies that any leachable radionuclides produced in it will either be pumped away continuously at extremely low concentrations or, in a dry site, will never be removed from this area. Equation (2) is used to calculate the radioactivity produced in zone B due to steady beam losses. This is done by recognizing the fact that the thresholds for the spallation reactions which produce the four troublesome radionuclides are approximately 30 MeV.[7] It is apparent from Van Ginneken's work[8] that only about 10 percent of the total flux of neutrons deep in a soil shield that result from interactions of high energy protons is above this approximate threshold, and that the dependence of the shape of the neutron energy spectrum in such a shield on incident proton energy is very weak. Using a conventional conversion factor(dose equivalent to flux)[9] and taking, for conservatism, 15 percent of the flux to have $E_n > 30$ MeV, a value of about 6000 n $cm^{-2}mrem^{-1}$ is obtained. For the fixed target mode, one can write the flux of neutrons as a function of radius r (cm) outside the tunnel walls as:

$$\emptyset\ (r) = 8.88 \times 10^5\ e^{-0.0194r}\ \ n\ cm^{-2}sec^{-1}\ (E_n > 30\ MeV). \qquad (4)$$

Multplying this flux by the macroscopic cross section and performing a simply integration, we obtain the production rate of the radionuclides of interest in, for example, zone B. The exponential dependence upon radius guarantees that Zone B will contain 98 percent of the radionuclides produced outside of Zone A.

After many years of operations, the production rates will come into equilibrium with the decay rate of the longest-lived leachable product(tritium). In all except the most arid of sites(in which leaching of activation products is obviously not a problem), a minimum water content would be 10 percent by volume. The most conservative dilution assumption to make is to divide the leachable activity produced in zone B by the volume of water present in it. Table 3 lists the satuation concentrations in groundwater using the values in Table 2. As one can see, the fixed target intensities can be handled with some margin of safety if Zone A is drained(even under these most conservative assumptions of using maximum production cross sections and minimal water volumes). Another element of conservatism in this approach is the assumption that no flow of water through the region near the tunnel is considered. Any such flow will result in lower concentrations due to the increased volume of water present. Also, it is unlikely that any individual would be allowed to drill his well within 3 meters of the accelerator tunnel, so that any migration of the water over a finite distance would result in reduction of the specific activity by further dilution and, for long transit times, by radioactive decay.

The concentrations would be roughly 10 times higher if one does not drain Zone A, so that this drainage zone could be entirely absent for operation of the SSC as a pure collider. It thus appears that groundwater protection around the unspecialized portions of the SSC require a simple drainage scheme in the fixed target mode, and even this is not needed if the SSC is used as a pure collider. Smaller rings presently under consideration will increase these values by no more that 30%.

6. Shielding for a Target/Beam Dump

During this workshop it was clear that fixed target physics advocates are considering a variety of possible targetry schemes too numerous to study in detail here. This section describes a very sketchy design for a relatively passive beam dump, shown in Figure 4, for an experiment which would use the maximum of 1.6×10^{19} protons per year. This dump is very simple in that it involves no magnetic fields and is merely a larger version of some beam dumps presently used at Fermilab. Procedures similar to those described for the unspecialized portions of the main accelerator tunnel were used to determine the shielding requirements shown. The volume of steel inside the concrete box was chosen to result in groundwater activation concentrations about 30 percent below the limits stated above. Working assumptions for the dilution were the same as those used above except for the fact that no

drainage volume was included here because the beam dump size was adjusted to achieve the desired groundwater concentrations. The results are in reasonable agreement with those obtained by scaling Monte Carlo calculations made by one of us(JDC) for a 1 TeV beam dump at Fermilab up to 20 TeV.

Hadron and muon shielding requirements are also shown. Experimental detectors would presumably be located downstream of the beam dump at distances comparable to those suggested by S.Mori[10]. It is clear that the required shielding can be achieved at minimal expense by either pitching the incident beam downward or toward a region of higher elevation.

This beam dump, although ponderous, does not appear to be unmanageable in size. It will be very important to carefully design the core of the dump to be capable of handling the very intense energy deposition, as has been correctly pointed out by Wenzel, et.al.[11] The dump will likely be preceded by a long, window-free drift space designed to greatly "blow up" the very small emittance extracted beam. Clever techniques to assure a manageable energy density in the target may be required. It is clear that this beam dump could accommodate a secondary beam channel. Furthermore, a gas target could intercept the beam upstream of the dump to feed other experiments, provided sufficient local shielding were included. It should be pointed out that large beam dumps are required even for operation of the SSC as a pure collider because of the need to dispose of either unwanted or degraded stored beams. These abort dumps could be somewhat smaller from the standpoint of external dose rate and groundwater activation considerations but would still have to be able to handle comparable instantaneous targeting rates(dependent upon details of the chosen extraction method). Although large, this beam dump is not a great departure in principle from those presently used at Fermilab and CERN.

7. Unaddressed Issues

Participants in this workshop raised several radiological issues which have not been addressed here. These include the special shielding required for the accelerator sections containing extraction devices, interaction regions, and gas jet targets which might be used(perhaps even during "planned" aborts of stored beam in a "pure" collider). These areas will need special treatment in accord with the expected beam loses both for external exposure and groundwater protection. The same locations in the lattice will also be subject to considerable residual activation.

It is very clear that conventional extraction devices such as wire septa will need careful design to handle the severe energy deposition density and should be made of low Z materials to achieve manageable residual exposure rates. Obviously these issues will be studied in detail to protect the facility(especially the superconducting magnets), as well as personnel.

References

1. M.S.Zisman, these proceedings:

2. J.T.Routi and R.H.Thomas, Nucl.Inst. and Meth. 76, 157(1969) and G.R.Stevenson, et al, Health Phys. 43 , 13 (1982).

3. R.H.Thomas and S.V.Thomas, LBL-16025 and Health Phys(to be published).

4. K.Tesch, Health Phys. 44, 79(1983).

5. A.Van Ginneken, In "Report of the 20 TeV Hadron Collider Technical Workshop", Cornell University, March 28-April 2,1983).

6. T.B.Borak, et al, Health Phys. 23, 679 (1972).

7. M.Barbier, Induced Radioactivity (North Holland Publishers, Amsterdam, 1969).

8. A.Van Ginneken and M.Awschalom, "High Energy Particle Interactions In Large Targets" Vol 1, (Fermilab, 1975).

9. S.Gronemeyer and P.J.Gollon, Fermilab Radiation Physics Note No.36 (1983).

10. S.Mori, Fermilab Report FN-318(1979).

11. W.A.Wenzel, et al, "Limitations on Beam Intensity," Proceedings of the Ann Arbor Workshop on Accelerator Physics Issues for a Superconducting Super Collider, December 12-17, 1983.

Table 1

Beam Loss Scenarios
(all at 20 TeV)

		Collider Mode	Fixed Target Mode
1.	1% loss uniformly distributed(R=26 km)	$1.2 \times 10^{9} m^{-1} yr^{-1}$	$10^{12} m^{-1} yr^{-1}$
2.	Large loss accident (over 100 m, once per year at a random location)	$10^{12} m^{-1}$	$5 \times 10^{12} m^{-1}$
3.	Expected beam loss (beam dumps, aborts interaction regions, extraction devices, targets,etc.	$<2 \times 10^{16} yr^{-1}$	$<1.6 \times 10^{19} yr$

Table 2

Properties Associated with the Production of Leachable Radionuclides

Radionuclide	Σ (cm^2/gm)	Σ[1] (cm^{-1})	%[2] Leachable	Half-Life	L[3] (pCi/cm^3)
^{3}H	1.1×10^{-3}	2.3×10^{-3}	100	12.3 years	20
^{22}Na	2.3×10^{-4}	4.8×10^{-4}	10-20	2.6 years	0.2
^{45}Ca	1.6×10^{-4}	3.3×10^{-4}	<5	163 days	0.06
^{54}Mn	5.9×10^{-5}	1.2×10^{-4}	<2	312 days	0.7

[1]Using a soil density of 2.08 gm/cm^3.
[2]Upper limits of this value are used in all calculations.
[3]L values are concentration guide limits on community well systems for the individual radionuclides resulting in a dose of 4 mrem per year to users of the water. The value for ^{3}H comes from 40 CFR while the others are scaled from 10 CFR part 20, Appendix B Table II relative to ^{3}H.

Table 3

Saturation Concentrations in Available
Water Near Tunnel

Radionuclide	C (pCi/cm^3)
^{3}H	1.5
^{22}Na	0.06
^{45}Ca	0.01
^{54}Mn	0.002

$$\sum_i \frac{Ci}{Li} = 0.55 \text{ (2.2 mrem/year)}$$

Figure Captions

1. Maximum dose equivalent due to hadrons as a function of earth overburden for several beam loss scenarious(all at 20 TeV).

2. Maximum dose equivalent due to muons as a function of earth overburden for several beam loss scenarious(all at 20 TeV).

3. Cross section of a possible accelerator tunnel section in an "unspecialized" lattice region showing shielding described in the text.

4. Shielding for a conceptual 20 TeV beam dump for 1.6×10^{19} protons per year.

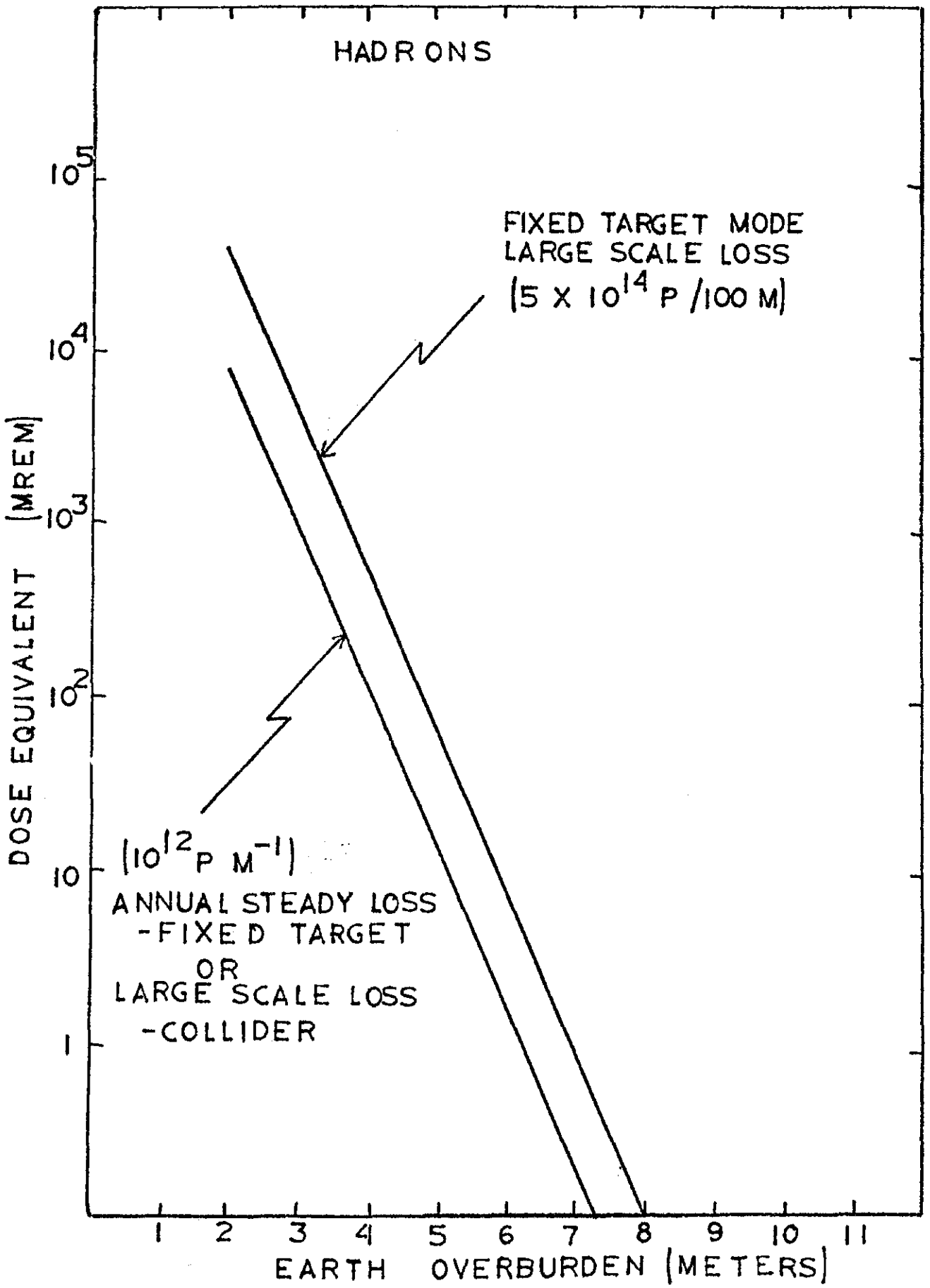
HADRONS
FIXED TARGET MODE
LARGE SCALE LOSS
(5 X 10^14 P /100 M)
(10^12 P M^-1)
ANNUAL STEADY LOSS
-FIXED TARGET
OR
LARGE SCALE LOSS
-COLLIDER
DOSE EQUIVALENT (MREM)
10^5
10^4
10^3
10^2
10
1
1 2 3 4 5 6 7 8 9 10 11
EARTH OVERBURDEN (METERS)

FIGURE 1

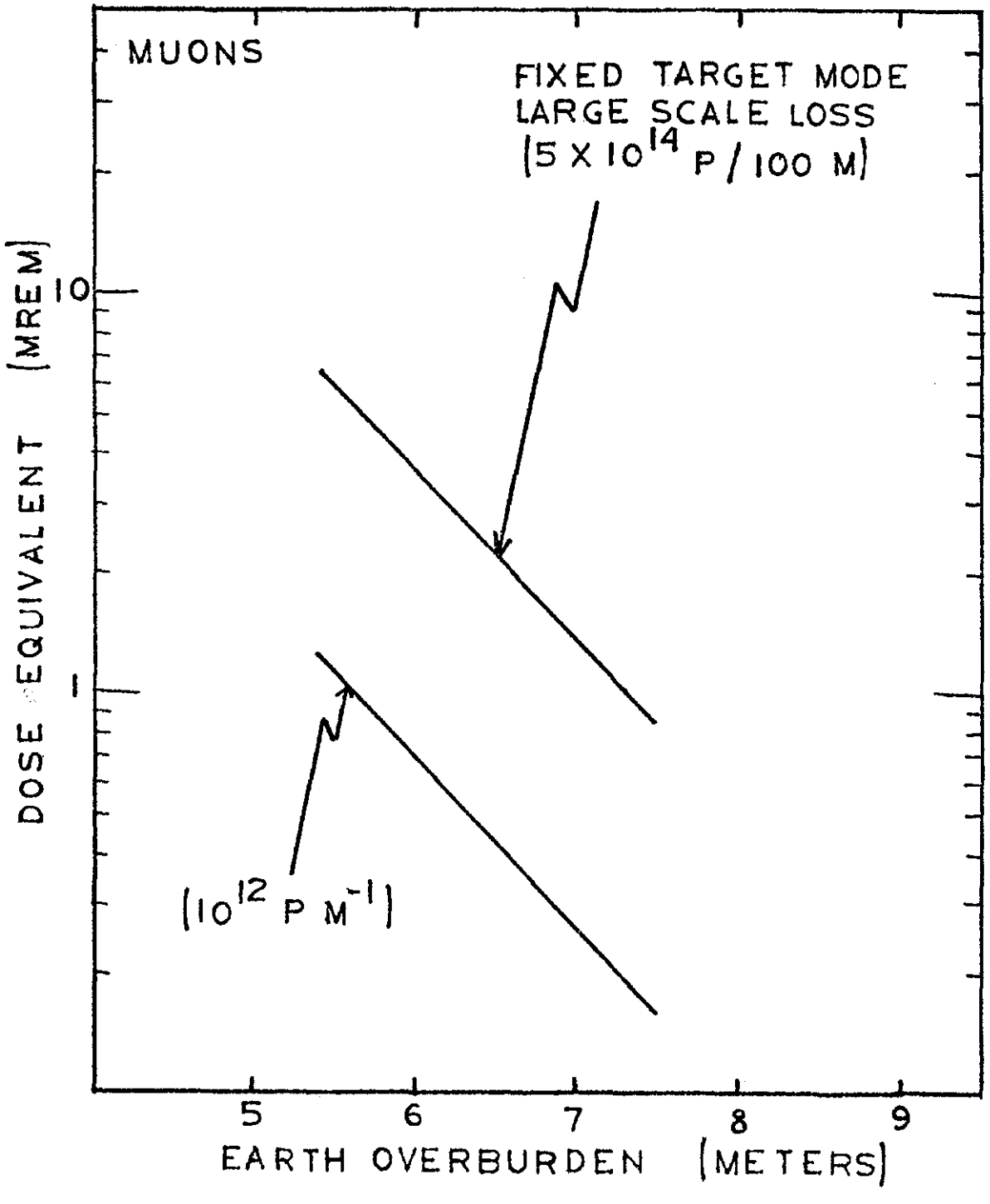
MUONS
FIXED TARGET MODE
LARGE SCALE LOSS
(5 X 10^14 P / 100 M)
(10^12 P M^-1)
DOSE EQUIVALENT (MREM)
10
1
5
6
7
8
9
EARTH OVERBURDEN (METERS)

FIGURE 2

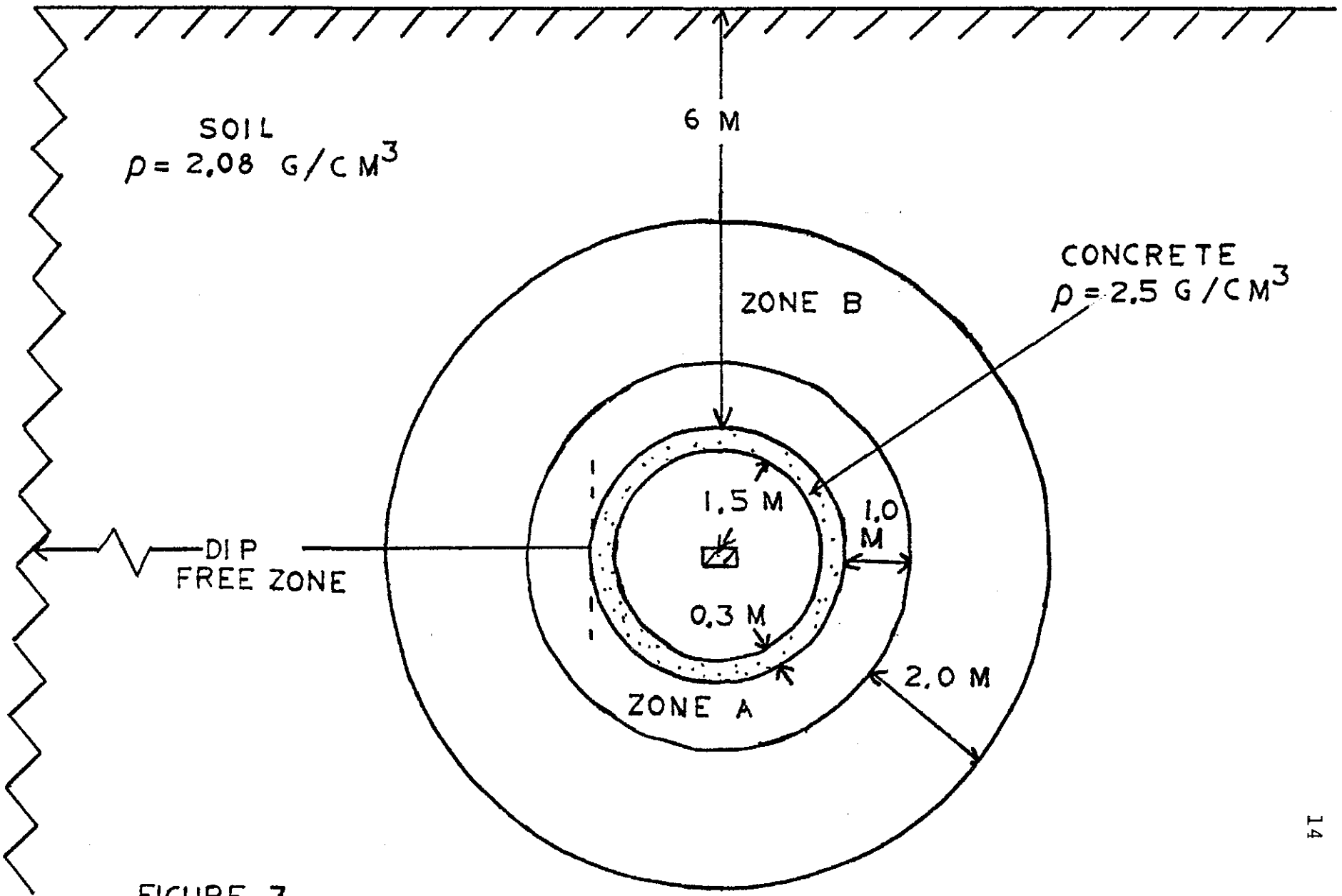
SOIL
ρ = 2.08 G/CM3
6 M
ZONE B
CONCRETE
ρ = 2.5 G/CM3
1.5 M
1.0 M
DIP
FREE ZONE
0.3 M
2.0 M
ZONE A

FIGURE 3

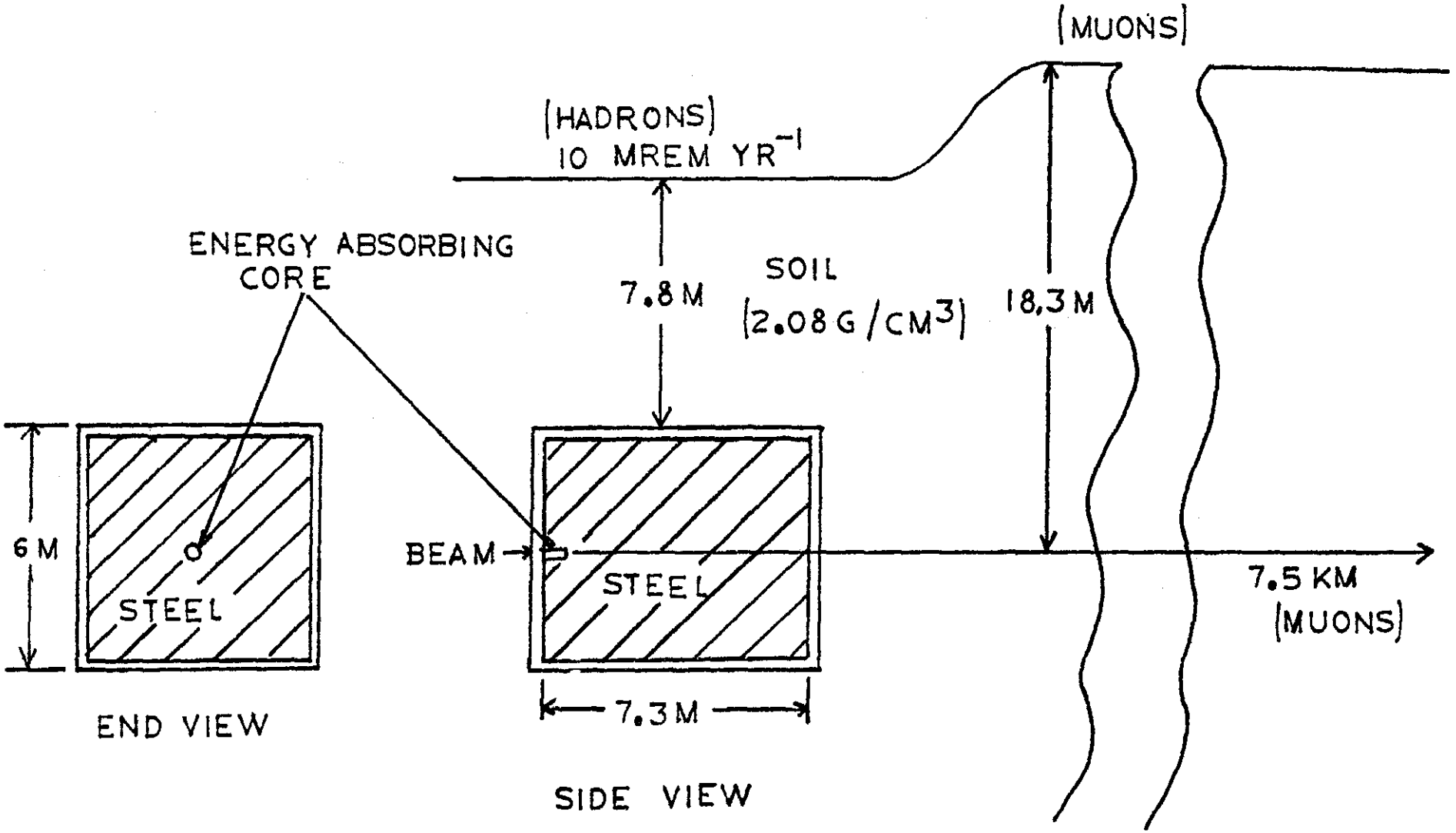
(MUONS)
(HADRONS)
10 MREM YR^{-1}
ENERGY ABSORBING
CORE
7.8 M
SOIL
(2.08 G/CM^3)
18.3 M
6 M
STEEL
BEAM
STEEL
7.5 KM
(MUONS)
7.3 M
END VIEW
SIDE VIEW

FIGURE 4