Fermi National Accelerator Laboratory

FN-366
0102.000

A Fast-Cycling Synchrotron Kaon Factory Using TRIUMF as Injector

L.C. Teng

March 1, 1982

PART 1 - Injection Scheme and General Design Considerations

TRIUMF provides a proton (or H^-) beam at an energy of ~500 MeV and an average current of ~100 μA. The most reliable, most versatile, and least costly accelerator capable of this beam current and the desired energy of 20 GeV is the fast-cycling synchrotron. Possible alternatives such as the microtron and the fixed-field alternating gradient accelerator (sector focusing ring cyclotron) require a great deal of R & D, and are more costly. The only obstacle in adopting the synchrotron at TRIUMF is the difficulty of using TRIUMF as injector. We propose here a new injection scheme which removes the problem altogether and allows exploitation of the full capability of TRIUMF as an injector.

A. Characteristics of Beam from TRIUMF

The characteristics of the beam extracted from TRIUMF for injection into the kaon factory are specified by J.R. Richardson.[1] One hundred turns of beam is stacked in TRIUMF at the extraction radius and extracted as a packet in one turn.

Extraction orbit radius	7.6m
Energy	450 MeV
Length of a packet	0.216 μsec
Repetition time of packets	21.6 μsec
No. of particles/packet (at 100 μA)	1.35×10^{10}
No. of beam bunches in a packet	5
(RF harmonic number	5)
(RF frequency	23.0 MHz)
Longitudinal emittance	
Phase spread	±30°
Momentum spread	±0.33%
Transverse emittance	
Horizontal	8π mm-mrad
Vertical	2π mm-mrad

It is possible to stack more than 100 turns to form a packet. The emittances, both longitudinal and transverse, would be larger and the repetition time would be longer.

B. The Synchrotron

The most prominent parameter is the peak bending magnetic field. Cost optimization of the magnet system alone gives an optimum peak field of 7-8 kG. Inclusion of the RF system raises the optimal field somewhat to around 8-9 kG. (One may want to deviate from these values for reasons other than cost.) Assuming 8½ kG at 20 GeV we get a bending radius of ~80m. Straight sections necessary to accommodate injection, extraction and RF cavities make the ring radius about 50% larger than the bending radius, say ~120m. It is desirable that the ring radius be an integral multiple of the extraction radius of TRIUMF so that injection can be synchronous. Transverse focusing strength - length and phase advance of cell - is chosen to give the desired transverse acceptance. A set of consistent parameters derived from these considerations is given below.

Pulse rate P	30 Hz
Bending circumference $2\pi\rho$	512m (32 x 16m)
Bending radius ρ	81.49m
Ring circumference $2\pi R$	764.0m (32 x 23.875m)
Ring radius R	121.6m (16 x 7.6m)
No. of cells N_c	32
Length of cell L_c	23.875m
Phase advance per cell μ_c	$\sim 90^\circ$

	Injection	Final
Kinetic energy T	0.45 GeV	20 GeV
(γ	1.48	22.3)
(β	0.737	0.999)
Magnetic rigidity $B\rho$	34.13 kGm	697.7 kGm
Bending field B	419 G	8.56 kG
Revolution frequency F	0.289 MHz	0.392 MHz

C. Injection Scheme

1. Accumulator Ring

Since the TRIUMF beam current is only $\sim$100 μA we presumably do not want to waste any of it. This requires a separate d.c. accumulator ring having the same circumference and installed next to the synchrotron in the same tunnel. The TRIUMF beam is injected into and accumulated in the accumulator during 1/30 sec. The 2×10^{13} particles (at 100 μA) accumulated are transferred to the synchrotron in one revolution. These particles are being accelerated while the accumulator is accumulating for the next pulse. This timing is shown in Figure 1.

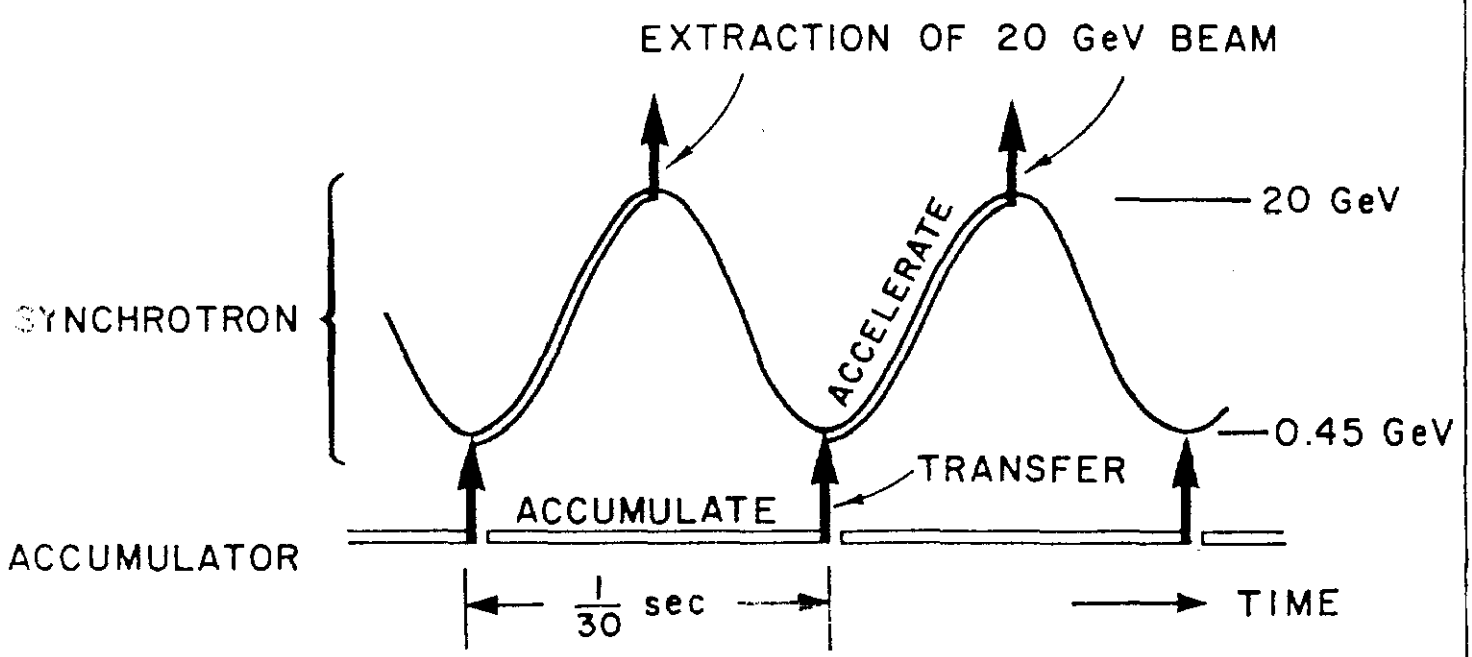

Figure 1. Timing between accumulator and synchrotron.

BP81-411

The accumulator ring has only to store a 450 MeV beam for 1/30 sec at a time. Its cost would only be a small fraction (<5%) of the cost of the synchrotron.

2. Stacking in Accumulator - Difficulties with Conventional Schemes

The revolution time on the extraction orbit of TRIUMF is 0.216 μsec. A total of 1/30 sec /0.216 μsec = 1.54×10^5 TRIUMF turns must be accumulated in the accumulator. These are to be stacked in the following manner.

Packet stacking (stacked in TRIUMF)	100
Box-car stacking (end to end in accumulator)	16
Transverse stacking (side by side in accumulator)	96
	$(100 \times 16 \times 96 = 1.54 \times 10^5)$

The box-car stacking into the accumulator which has a circumference 16 times that of TRIUMF extraction orbit presents no difficulty. But the transverse stacking of 96 turns is extremely difficult. Let us examine the conventional schemes.

Conventional multi-turn stacking in transverse phase spaces of this many turns has never been done. Stacking all in the vertical plane (plane with smaller emittance) and assuming an optimistic dilution factor of only 2, one would already require a vertical acceptance of

$$2 \times 96 \times (2\pi \text{ mm-mrad}) = 384\pi \text{ mm-mrad}$$

This is much too large. Stacking in both horizontal and vertical planes poses problems which require very costly, if not impossible, solutions. Assuming that the beam can be extracted from TRIUMF as an H^- beam, we can contemplate charge exchange injection. Conventional charge-exchange injection scheme can indeed handle the 96 turns, but because of the unfavorable time structure of the extracted TRIUMF beam the multiple Coulomb scattering by the stripper foil is excessive. To obtain reasonable stripping efficiency (>90%) we need, say, a carbon foil 150 μg/cm^2 thick.[2] In 1/30 second the first injected beam will have passed the foil 9600 times or the equivalent of 9600 x 150 μg/cm^2 = 1.44 g/cm^2 of carbon. The root-mean-square scattering angle θ_{rms} due to multiple Coulomb scattering is

$$\theta_{rms} = \frac{20 \text{ MeV}}{pv} \sqrt{\frac{\ell}{\ell_{rad}}} = \frac{20 \text{ MeV}}{754 \text{ MeV}} \sqrt{\frac{1.44 \text{ g/cm}^2}{42.7 \text{ g/cm}^2}} = 4.9 \text{ mrad}$$

which is unacceptably large. Nevertheless, charge exchange injection offers the only realistic hope for stacking 96 turns.

3. Fast-Kicker Charge-Exchange Stacking Scheme

We modify the charge-exchange stacking scheme to reduce foil scattering. Four identical fast kickers are placed in a straight section of the accumulator as shown in Figure 2. For this example we assume that the orbit is kicked in the vertical plane and that the vertical amplitude function β_v at the stripper foil is 8m. Thus, the vertical size of the 2π mm-mrad emittance H^- beam from TRIUMF is $\pm\sqrt{(2\text{ mm-mrad}) \times (8\text{m})} = \pm 4\text{mm}$. The assumed kick is 20mm. Hence the unkicked clear aperture (limited by the foil) is ±16mm which corresponds to an acceptance emittance ε_o of:

$$\varepsilon_o = \pi \frac{(16\text{mm})^2}{8\text{m}} = 32\pi \text{ mm-mrad}$$

The space charge limit at 450 MeV is, then:

$$N = \frac{2\Delta\nu}{r_o} \beta^2\gamma^3\varepsilon_o = \frac{2 \times 0.2}{1.535 \times 10^{-18}\text{m}} (0.737)^2 \times (1.48)^3 \times 32\pi \times 10^{-6}\text{m}$$

$$= 4.6 \times 10^{13}$$

adequate for the 2×10^{13} particles to be accumulated.

The orbit is kicked upward 20mm onto the foil only for the duration 0.216 μsec when the beam packet arrives and is returned to the unkicked position, hence away from the foil, for the ∿21.4 μsec before the next packet arrives. The foil need only be as large as the small incident H^- beam. Thus, when the orbit is in the kicked position a part of the larger circulating beam will still miss the foil. Even neglecting this reduction factor the first injected beam will now on the average pass the foil only 96 times corresponding to an rms scattering angle of only 0.49 mrad. Since the divergence of the incident H^- beam at the foil is $\pm\sqrt{(2\text{ mm-mrad})/8\text{m}} = \pm 0.5$ mrad, the foil scattering can at most increase the vertical emittance from 2π mm-mrad to $\sim 8\pi$ mm-mrad which is still well within the vertical acceptance of 32π mm-mrad.

The timing of the extraction and arrival times of the H^- beam packet from TRIUMF and of the firings of the kickers is such that packet No. 2 is stacked end-to-end immediately behind packet No. 1, packet No. 3 immediately behind No. 2, and so on around the accumulator ring. The circumference is filled after No. 16. Packet No. 17 is then stacked together with No. 1 through the charge exchange mechanism and packet No. 18 with No. 2, etc. In 1/30 sec the accumulated beam of 2×10^{13} particles is transferred to the synchrotron in one turn and the stacking for the new pulse continues without interruption. Both TRIUMF and the kickers operate at 100% duty. The kickers are fired regularly at 21.6 μsec intervals or at a CW frequency of 46 kHz.

4. The Kickers

The kickers are single-turn ferrite-core magnets pulsed by discharging sections of transmission lines through hydrogen thyratrons. For the geometry shown in Figure 2 the field times length $B\ell$ of the kicker is given by

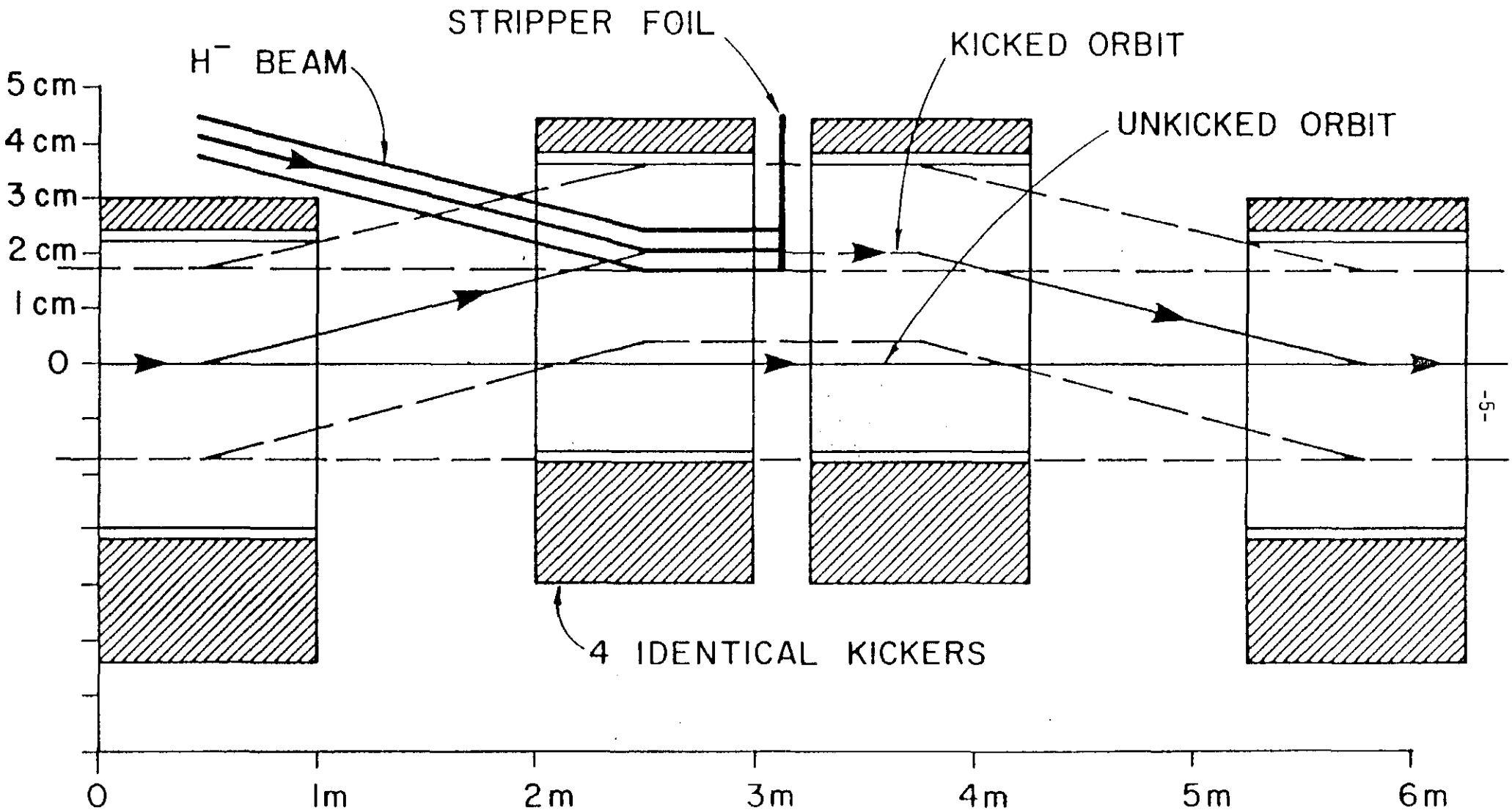
STRIPPER FOIL
H⁻ BEAM
KICKED ORBIT
UNKICKED ORBIT
5 cm
4 cm
3 cm
2 cm
1 cm
0
4 IDENTICAL KICKERS
0
1m
2m
3m
4m
5m
6m

$$\frac{B\ell}{B\rho} = \frac{20\text{mm}}{2\text{m}} = 10 \text{ mrad}$$

or

$$B\ell = B\rho \times 10^{-2} = 341.3 \text{ Gm} = (341.3 \text{ G}) \times (1\text{m})$$

The gap g (horizontal) of the kickers depends on the horizontal amplitude function but g = 80mm is certainly adequate. To obtain B = 341.3 G we need a current I of

$$I = \frac{Bg}{\mu_o} = \frac{(341.3 \times 10^{-4}\text{T}) \times (80 \times 10^{-3}\text{m})}{4\pi \times 10^{-7}} = 2.17 \text{ kA}$$

The inductance L is

$$L = \mu_o \frac{A}{g} = 4\pi \times 10^{-7} \frac{(1\text{m}) \times (52 \times 10^{-3}\text{m})}{80 \times 10^{-3}\text{m}} = 0.817 \ \mu\text{H}$$

Assuming a rise time of

$$\tau = 20 \text{ nsec.}$$

we get a required voltage V of

$$V = L \frac{dI}{dt} = (0.817 \times 10^{-6}\text{H}) \frac{2.17 \times 10^{3}\text{A}}{20 \times 10^{-9} \text{ sec}} = 88.6 \text{ kV}$$

The pulse duration is just the length of the beam packet, namely

$$\Delta t = 0.216 \ \mu\text{sec}$$

These are all convenient values and can be supplied by commercially available components. The rise time of the kickers does not have to be this short; it is only desirable that with the injection of each incident beam packet not much more than 0.216 μsec of the circulating beam is deflected onto the stripper foil. In any case the rise time will be comparable to the beam transit time of ∿28 nsec through the kickers. The firing of the four kickers must therefore be staggered to synchronize to the beam transit times.

5. The Stripper Foil

The stripper foil is assumed to be 150μg/cm^2 thick carbon film. The bottom edge must be unsupported. If necessary the foil could be thicker. A factor 4 in thickness will only double the scattering angle. It is desirable that the foil is just large enough to intercept the small incident H^- beam, but supporting the foil may require it to be larger. Some possible geometries are shown in cross-section in Figure 3.

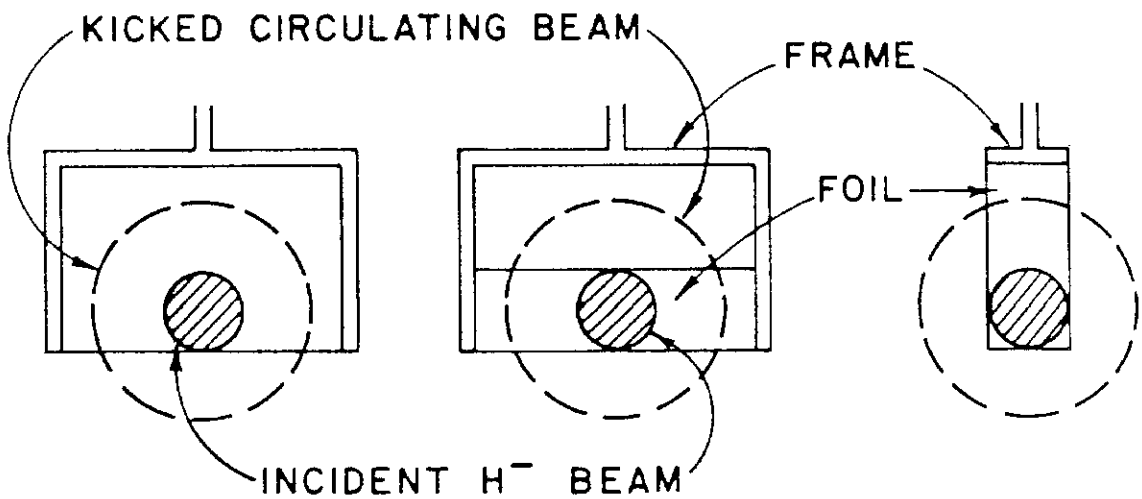

Figure 3. Possible stripper foil geometries.

6. Transfer of Beam From Accumulator to Synchrotron

The one-turn extraction of the beam out of the accumulator and the one-turn injection into the synchrotron can be accomplished in the conventional manner. For extraction the beam is kicked laterally by a fast kicker so that at 1/4 oscillation downstream the beam is kicked across either a ramped current septum or an iron septum and is deflected out of the machine. The stacking kicker with a 20 nsec rise time and capable of a 10 mrad kick (2 mrad is adequate) is more than adequate for this application. Injection into the synchrotron is accomplished by the same procedure in reverse. If the synchrotron and the accumulator are placed right next to each other the transfer may be carried out with little or no beam transport line in between.

7. Extracting an H^- Beam from TRIUMF

Vertical focusing in TRIUMF is very weak. It is easy to kick the beam out vertically by either a magnetic or an electric kicker. To deflect the beam vertically by ∿20mm to jump across a septum and enter an extraction channel, all one needs is a 1 mrad kick ∿0.8 revolution (1/4 oscillation) upstream. This requires

$$B\ell = B\rho \times 10^{-3} = 3413 \text{ Gcm} = (171 \text{ G}) \times (20 \text{ cm})$$

for a magnetic kicker or

$$E\ell = \frac{pv}{e} \times 10^{-3} = 754 \text{ kV} = (38 \text{ kV/cm}) \times (20 \text{ cm})$$

for an electric kicker. Either is quite easy. The design of the septum and the channel requires detailed knowledge of TRIUMF components, but should not present unsurmountable difficulties.

As a matter of principle, since 96 turn stacking in the accumulator is much more difficult than extraction from TRIUMF, it is fitting that the once and only charge exchange capability should be reserved for use in stacking.

D. Radiofrequency Systems

1. Accumulator RF System

For this we assume a more convenient frequency of 46 MHz, twice that of TRIUMF. Relative to this system the beam bunch characteristics are

$$h = 2 \times (5 \times 16) = 160, \quad (\frac{R}{h} = 0.76 \text{ m})$$

$$\Delta\phi = \pm 60^{\circ} = \pm\frac{\pi}{3}$$

$$\Delta p = \pm 0.0113 \text{ eVsec/m} \quad (\frac{\Delta p}{p} = \pm 0.33\%)$$

The longitudinal emittance of a beam bunch is then

$$\varepsilon_{\ell} = \pi\frac{R}{h}\Delta\phi\Delta p = 0.0282 \text{ eVsec}$$

Without a design of the magnet lattice we shall assume a transition energy for the accumulator of $\gamma_t \sim 8$. This gives

$$\eta \equiv \frac{1}{\gamma^2} - \frac{1}{\gamma_t^2} \approx 0.44.$$

For the peak rf voltage there are three choices as indicated in Figure 4.

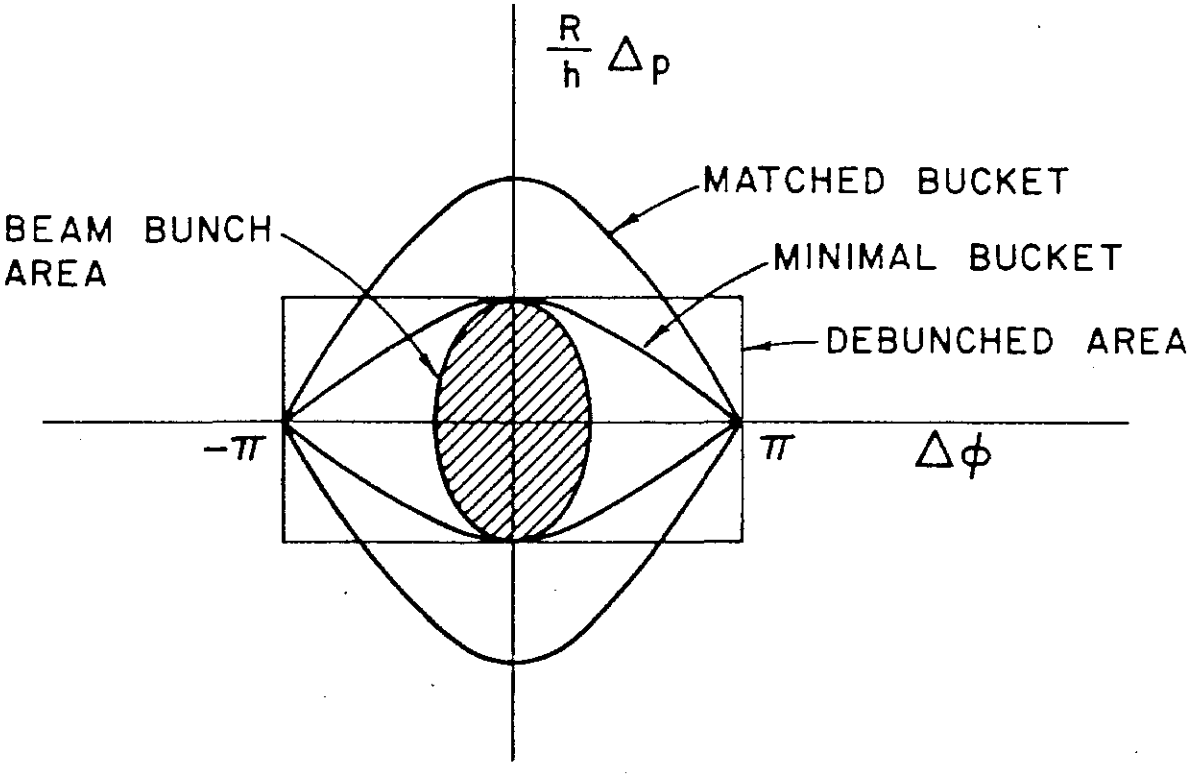

BP81-411

Figure 4. Choices of rf buckets in accumulator.

a. Matched Bucket

For this case the aspect ratio of the phase trajectory is equal to that of the beam bunch. Hence the emittance remains unchanged. The peak rf voltage required is given by

$$mc\sqrt{\frac{2}{\pi h}\ \frac{eVo}{mc^2}\ \frac{\gamma}{\eta}} = \frac{\Delta p}{\Delta\phi/2}$$

This gives

$$Vo = 3.31\ \text{MV}$$

The bucket area is $8\frac{R}{h}\frac{\Delta p}{\Delta\phi/2} = 0.131$ eVsec, almost 5 times the beam emittance.

b. Minimal Bucket

In this case the bucket height is just large enough to contain the bunch phase area. The peak rf voltage is given by

$$mc\sqrt{\frac{2}{\pi h}\ \frac{eVo}{mc^2}\ \frac{\gamma}{\eta}} = \Delta p$$

This gives

$$Vo = 0.908\ \text{MV}$$

Being mismatched the area of the beam bunch will smear up to fill the entire bucket. The emittance will then increase to the area of the bucket, namely

$$\varepsilon_\ell = 8\frac{R}{h}\Delta p = 0.0685\ \text{eVsec}$$

c. No RF

Namely $V_o = 0$. In this case the beam will simply debunch to fill the rectangle with area

$$\varepsilon_\ell = (2\pi)(2\frac{R}{h}\Delta p) = 0.1076\ \text{eVsec}$$

The debunched beam after transfer to the synchrotron has to be rebunched by adiabatic capture. This is a lossy process, 10-20% beam loss is likely. On the other hand, one saves the cost of the rf system.

For good efficiency and beam quality one should employ the matched bucket arrangement. Actually, despite the rather high voltage of 3.3 MV, this fixed-frequency, zero-power-to-beam (no acceleration) rf system is not very costly. With high-Q cavities

one can obtain perhaps 1 MV per cavity. We shall assume that such a system is used and the transfer to the synchrotron is synchronous.

2. Synchrotron RF System

This system should operate at the same harmonic number h = 160. At injection $\frac{dp}{dt} = 0$ and the matched peak rf voltage is the same $V_o = 3.31$ MV as in the accumulator.

With a sinusoidal guide field the momentum as function of time (t in sec) is

$$p(t) = \frac{p_f + p_o}{2} - \frac{p_f - p_o}{2} \cos 2\pi Pt$$

$$= 10.970 \text{ GeV/c} - (9.947 \text{ GeV/c}) \cos 60\pi t$$

and the energy gain per turn is

$$\frac{dT}{dn} = 2\pi R \frac{dp}{dt} = (4.78 \text{ MeV}) \sin 60\pi t$$

The highest energy gain per turn of 4.78 MeV occurs at the halfway point t = 1/120 sec. To keep the same bucket area 0.131 eVsec at that point we need a peak rf voltage of $V_o = 5.26$ MV which corresponds to a synchronous phase of $\phi_s = 65.26^o$. In general one should operate on a $V_o = V_o(t)$ curve such that the bucket area is maintained constant throughout. The highest voltage required is about 5.3 MV occurring a little above the halfway point. The total frequency modulation range is from $f_o = 46.0$ MHz to $f_f = 62.4$ MHz, some 30%.

With double-gap half-wavelength (2.4m) ferrite-loaded cavities we may be able to develop 80-90 kV per cavity. We will then need 60-70 cavities and a total of ∿170m of straight section length to accommodate the cavities. This seems to be a lot of rf. But one should remember that acceleration is the principal function of an accelerator and we are indeed imparting ∿2 MW power to the beam.

E. Beam Extraction and Duty Factor

To obtain full flexibility in adjusting the duty factor of the beam spill, from near zero to near 100% one needs a d.c. Spill-Stretcher Ring. Since this ring has to operate at 20 GeV, the magnets should have superconducting coils in order that the power consumption is within reason. Such a ring has been described earlier.[3] The accelerated beam at 20 GeV is transferred from the synchrotron to the stretcher ring in one turn. The fast kicker for the single turn extraction and injection needs to kick the beam by an angle of only ∿2 mrad. The field times length of such a kicker is

$$B\ell \simeq (700 \text{ kGm}) \times 2 \times 10^{-3} = 1400 \text{ Gm} = (350 \text{ G}) \times (4\text{m})$$

which can be supplied by four 1m long kickers similar to those for beam stacking in the accumulator.

The beam in the stretcher can be slow-spilled in 1/30 sec by a resonant extraction system to give a 100% duty factor and at an efficiency of >99% or many synchrotron pulses can be stacked in the stretcher and the entire stack extracted in one turn.

F. Conclusion

With the proposed 100% duty and ∿100% efficiency injection scheme the accumulator-synchrotron combination is without a doubt the simplest, most reliable and least costly by far, of all alternatives for a kaon factory for TRIUMF. Whether one adds a spill-stretcher ring to enhance the versatility of the facility for doing experiments depends on an evaluation of the balance between cost and gain. Even with the stretcher ring included the facility as described will likely cost less than all other alternatives.

References

1. J.R. Richardson, Private Communication.

2. R. Baartman, R. Laxdal, G. Mackenzie, "Kaon Factory - Neutral Beam Injection," (22 Oct. 1981).

3. L.C. Teng, "A High Intensity Accelerator Facility," Proc. of the Workshop on Nucl. and Particle Phys. at Energies up to 31 GeV, Los Alamos National Laboratory (Jan. 1981).

PART 2 - Design Details of a 16 GeV Machine

In this report we proceed a little further in developing the design of the Accumulator and the Synchrotron (referred to collectively as the "rings" when no distinction is necessary), the two major components of the Kaon Factory proposed earlier.[1] The third major component, the spill-stretcher ring, will not be discussed. The starting design assumptions are:

1. Because of land limitations the ring radius cannot be larger than ~80 m.

2. The ring rf frequency is twice that of TRIUMF. At this higher frequency cavities are smaller and parts are more readily available.

A consistent set of injection parameters is, then

Injection energy T_o	450 MeV
Ring rf frequency f_o	46.15 MHz
RF length $\lambda \equiv v_o/f_o$	4.788 m

(TRIUMF extraction orbit length = $10\lambda = 2\pi \times 7.62$m)

A. CHOICE OF RING RADIUS

The ring circumference can be any integral multiple (harmonic number h) of the rf length λ. As pointed out by J.R. Richardson[2], to fill all the rf buckets with the 1/2 (46.15) MHz beam bunches from TRIUMF h should be odd. Here we choose the largest ring allowed by the real estate condition (1) above, this gives:

$$h = 105$$
$$2\pi R = h\lambda = 502.72\text{m}$$
$$R = 80.01\text{m}$$

which corresponds to the case with the second largest R_A given in Ref. 2.

Since the harmonic number of TRIUMF is 10 (for 46.15 MHz), n revolutions in this ring corresponds to (h/10) n = 10.5n revolutions in TRIUMF. For proper box-car stacking the beam packet extracted from TRIUMF should be a stack of 10.5n ±1 turns. To get a number around 100 we can take n - 9 or 10 to give 94.5 ± 1 or 105 ± 1 as the number of turns in a packet — 106 is a good choice. At an average TRIUMF beam current of 100 μA this gives 1.43×10^{10} protons in a packet.

B. CHOICE OF FINAL ENERGY AND CYCLE RATE

With this radius it will be costly to reach 20 GeV. We shall, therefore, concentrate on 16 GeV and only indicate some 20 GeV parameters in parentheses. The cycle rate is taken to be P = 30Hz as before.

C. SYNCHROTON RF SYSTEM

At T_f = 16 GeV the momentum is p_f = 16.912 GeV/c and the momentum p as a function of time t (in seconds) is

$$p(t) = \frac{p_o + p_f}{2} + \frac{p_o - p_f}{2} \cos 2\pi Pt$$

$$= 8.968 \text{ GeV/c} - (7.945 \text{ GeV/c}) \cos 60\pi t$$

The maximum energy gain per turn is

$(dT/dn)_m = 2\pi R\ (dp/dt)\ (t=1/120) = 2.511$ MeV/turn at T_m=8.078 GeV.

With 180° single drift-tube, double-gap, ferrite-tuned cavities one arrives at the following parameters.

Initial energy T_o	450 MeV	
Initial frequency f_o	46.15 MHz	
Final energy T_f	16 GeV	(20 GeV)
Final frequency f_f	62.52 MHz	(62.55 MHz)
Transition-γ γ_t (see below)	7.423	
Beam intensity	2.08×10^{13} p/pulse	
No. of cavities (stations)	50	(62)
Length of cavity ~ $\lambda/2$	2.39 m	
Power per station	250 kW (peak)	
Harmonic number h	105	

The following parameters are those at the time of maximum rate of energy gain.

Energy T_m	8.078 GeV	(10.072 GeV)
Energy gain $(dT/dn)_m$	2.511 MeV/turn	(3.144 MeV/turn)
Peak voltage/cavity	55kV	
Peak voltage/turn	2.75 MV	(3.41 MV)
Power to beam/cavity	100kW	
Total power to beam	4.96 MW	(6.23 MW)
Bucket area	0.10 eVsec	(0.09 eVsec)

The bucket area is more than 3 times the beam bunch longitudinal emittance of 0.0282 eVsec and should be quite adequate.

It is interesting to point out that to produce the 1.6 MW of beam power (100 μA at 16 GeV) one needs ~3MW of rf power and ~6 MW of a.c. line power. (For 20 GeV we have 2MW of beam power, ~4MW of rf power and ~8 MW of line power). The power consumption of the rf system is, by far, the largest of all components.

D. ACCUMULATOR RF SYSTEM

The accumulator rf system has only to provide stationary buckets at 450 MeV to keep the injected beam bunched. To get stationary buckets with aspect ratio equal to that of the beam bunches ($\Delta p/p = \pm 0.33\%$ and $\Delta\phi = \pm \pi/3$ for h = 105 rf system) we arrive at the following parameters:

Transition-gamma (see below)	7.808
Peak voltage per turn	2.18 MV
Bucket area	0.13 eVsec

The bucket area is more than 4 times the longitudinal emmittance of the beam bunch. This fixed-frequency high-Q rf system can be quite inexpensive.

E. SYNCHROTRON MAGNET LATTICE

Since the ring radius is smaller than optimum the major concern in lattice design is to minimize the field and the stored energy, hence the costs of both magnet and power supply systems. This leads to the following choices.

1. Combined function magnet lattice has lower overall stored energy.

2. We could put all 50 rf cavities in a few, say 2, matched long straight sections; except that the matching quadrupoles would take up extra circumferential space and add to the total stored energy . Therefore, we will distribute the cavities in short "unmatched" straight sections in normal cells.

3. To minimize the field the total straight section length should be no more than necessary. Straight section lengths required are:

Function	Length
RF cavities	50 $\lambda/2$
Injection and extraction	4 $\lambda/2$
Beam monitors and correction magnets	10 $\lambda/2$
Flanges, bellows, pump ports and coil ends	6 $\lambda/2$
TOTAL	70 $\lambda/2 = 1/3\ (2\pi R)$

Thus, the straight section in a cell should be ~ 1/3 the cell length.

4. To facilitate relative phasing of the rf cavities it is convenient to have them spaced at multiples of π apart in phase. Hence the cell length should be multiples of $\lambda/2$.

With one cavity per straight section the straight section length is ~ $\lambda/2$ and the cell length is ~ 3 $\lambda/2$ = 7.18 m which is too short. With 2 cavities per straight section we can have a cell length of 7 $\lambda/2$ = 16.7573 m. Such a cell is shown below.

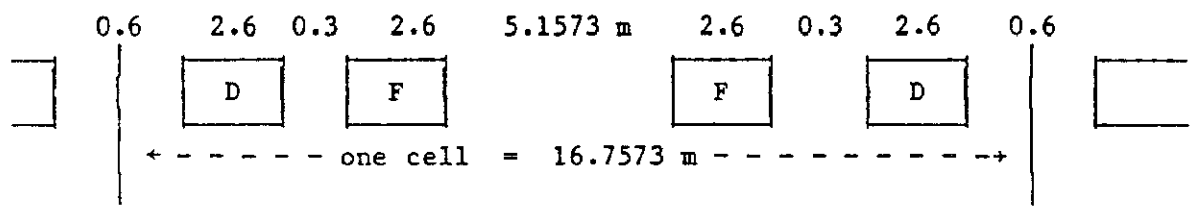

The bending parameters are:

Number of cells N	30
Length of cell L	16.7573 m
Length of magnet ℓ	2.6 m
Bending length $2\pi\rho = 4N\ell$	312 m
Bending radius ρ	49.656 m
Bending field	
Injection (0.45 GeV) B_o	0.687 kG
Final (16 GeV) B_f	11.361 kG
(20 GeV	14.051 kG)

Scaling from the synchrotron bending radius given in Ref. 1 we see that this smaller ring is appropriate for ~ 13 GeV. It is, therefore, not far from optimum at 16 GeV.

The focusing parameters are given in the SYNCH print-out (Fig. 1). The critical ones are:

Gradient B'/B	$3.4m^{-1}$ (F magnet) $-3.2m^{-1}$ (D magnet)
Tune ν (H = V)	7.41 (adjusted)
Chromaticity $\xi = d\nu/(dp/p)$	-7.0 (H) -10.5 (V)
Transition-gamma γ_t	7.423 (T_t = 6.03 GeV)
Max. amplitude function β_{max}	17.5m (H) 27.7m (V)
Max. dispersion function η_{max}	1.82m

F. SYNCHROTRON APERTURE AND MAGNETS (16 GeV only)

Allowing for a safety factor and for future improvements we design for a space-charge limited intensity of 5×10^{13} p/pulse. This requires a vertical aperture of ±3cm at βmax (V) = 27.7m, namely a vertical acceptance of ~32 π mm-mrad. A similar horizontal good field width of ±3 cm is adequate to contain both the betatron and the dispersion widths of the beam. At injection $\Delta p/p = \pm 0.33\%$ giving a dispersion width of $\eta_{max} \times (\Delta p/p) = \pm 6.0$ mm. With β_{max} (H) = 17.5m the remaining ± 24mm corresponds to a horizontal acceptance of 33 π mm-mrad, about the same as the vertical.

Because of the high beam intensity we will keep the coils away from the midplane. The magnet poles must then be slightly tapered to avoid saturation at the pole base. The cross-section of the magnet is shown in Fig. 2. The interesting parameters are the following:

Vertical gap on orbit	6 cm
Pole tip width	18 cm
Pole base width	22 cm
Pole height	9 cm
Pole face slope	3.4% cm^{-1} (F magnet) -3.2% cm^{-1} (D magnet)
Good field width (with shims)	> 6 cm
Ampere-turn per coil	27.12 kA
Coil gross cross-section	11 cm (H) X 8 cm (V)
Return yoke width	12.5 cm
Peak average flux density in yoke	~ 16.7 kG
Overall dimension	69 cm (H) X 49 cm (V)

The magnet yoke should be stacked from transformer silicon steel laminations ~ 1/2 mm thick, on an arc to follow the bending radius. The copper conductor of the coils should be < 1 cm in transverse dimensions and should be water cooled. The vacuum chamber could either be on the outside encasing the yoke, a la Cornell synchrotron and Fermilab booster or be inside the aperture and made of, e.g. ceramic. Even if the chamber wall were as thick as 5mm the space charge limited intensity is still ~ 4×10^{13} p/pulse. A simple vacuum of 10^{-6} Torr is adequate. The magnets are powered by a conventional resonant circuit which needs no elaboration here.

The power consumption is modest. Assuming that half of the 88 cm^2 coil cross-sectional area is copper we get a total resistive power loss of ~ 2.2 MW. With the lamination and coil conductor thicknesses specified above the eddy current losses should be small.

G. ACCUMULATOR LATTICE AND MAGNETS

The accumulator magnet lattice is similar to that of the synchrotron with identical cell length and number, except now we can shorten the magnet to increase the field above 1 kG to put it in the range of high and constant permeability. In addition, this lengthens the straight section making it better for accomodating the fast-kicker charge-exchange injection system described in Ref. 1. One full cell is shown below.

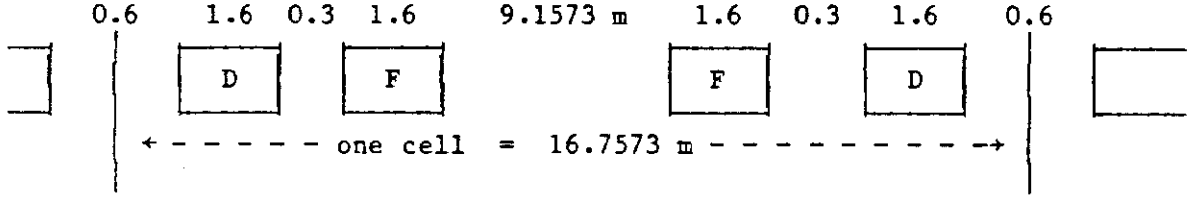

The important parameters are:

Number of cells N	30
Length of cell L	16.7573 m
Length of magnet ℓ	1.6 m
Bending length $2\pi\rho = 4N\ell$	192 m
Bending radius ρ	30.558 m
Bending field (0.45 GeV) B_o	1.117 kG
Gradient B'/B	4.24 m^{-1} (F magnet) -3.92 m^{-1} (D magnet)
Tune $\nu_H = \nu_V$	7.41 (adjusted)
Chromaticity ξ	-6.04 (H) -11.31 (V)
Transition-gamma γ_t	7.808 (T_t = 6.39 GeV)
Max. amplitude function β_{max}	14.0 m (H) 27.9 m (V)
Max. dispersion function η_{max}	1.58 m

The SYNCH run is given in Fig. 3.

The low field d.c. accumulator magnets could have a cross-section as shown in Fig. 4. The yoke could be machined out of solid steel forgings, but is, perhaps, still most easily and economically stacked out of soft low-carbon steel laminations. The coil is shown as a single turn of solid copper. No cooling is necessary. The important parameters are:

Vertical gap on orbit	6 cm
Pole width	12 cm
Pole height	2 cm
Pole face slope	4.24% cm^{-1} (F magnet) -3.92% cm^{-1} (D magnet)
Good field width (with shims)	> 6cm
Ampere-turns per magnet	5.33 kA
Coil conductor cross-section	4 cm (H) x 10 cm (V)
Current density in conductor	133 A/cm^2
Return yoke width (for mechanical strength requirement)	2 cm
Average flux density in yoke	~ 5 kG
Overall dimensions	24 cm (H) × 14 cm (V)
Power per magnet	461 W
Total power consumption	55.3 kW

The accumulator magnets are quite light and can be mounted directly on top of the synchrotron magnets. The midplanes of the two machines could be only 40 cm apart. Magnetic shielding is needed to decouple the effects of the fields on the particle orbits. In d.c. magnets the vacuum chamber can be made of stainless steel, say 2 mm thick.

H. INJECTION INTO ACCUMULATOR

The fast-kicker charge-exchange injection system of Ref. 1 is installed in the accumulator such that the stripper foil is at the middle of the straight section where

$$\beta(V) = 7.37 \text{ m}$$

This is slightly less than the 8 m assumed in Ref. 1 and hence provides a small desirable clearance between the foil edge and the unkicked acceptance envelope. All the assumed vertical parameters are appropriate.

The assumed horizontal gap g = 80 mm of the kickers is excessive. Since the horizontal good field aperture of the ring magnets is 60 mm, there is no reason to have a larger kicker gap. Thus, the kicker parameters are modified to the following.

Horizontal gap g	60 mm
Peak current I	1.63 kA
Inductance L	1.089 μH
Rise and fall time τ	20 nsec
Voltage $V = LI/\tau$	88.7 kV
Pulse duration Δt	0.217 μsec
Repetition time	23.0 μsec (43.5 kHz)

A small d.c. vertical bending magnet with $B\ell \sim 1$ kG m placed in the incoming H^- beam just upstream of the first kicker will keep the beam clear of the upstream F ring magnet on the way in.

I. BEAM TRANSFER BETWEEN ACCUMULATOR AND SYNCHROTRON

Two vertical iron septum magnets with

$$B\ell \cong (7 \text{ kG}) \times (0.5 \text{ m})$$

will each deflect the beam by an angle

$$\theta = \frac{B\ell}{B\rho} \quad \frac{3.5 \text{ kG m}}{34.13 \text{ kG m}} \cong 0.1 \text{ mrad}$$

and together form a dog-leg. The 40 cm vertical separation between the orbits is spanned in ~ 4.5 m (including magnet lengths) longitudinal space. The dog-leg can therefore be accommodated in one straight section and will look like that shown in Fig. 5.

The matching is not perfect but not bad. The amplitude functions in the middle of the straight sections are

	Accumulator	Synchrotron
$\beta(H)$	12.26 m	17.11 m
$\beta(V)$	7.37 m	6.54 m

The total dilution is, then

$$\frac{(\varepsilon_H \varepsilon_V)_{\text{synchrotron}}}{(\varepsilon_H \varepsilon_V)_{\text{accumulator}}} = \frac{17.11}{12.26} \times \frac{7.37}{6.54} = 1.57$$

namely the 4-dimensional phase-space volume occupied by the beam is enlarged by a factor 1.57 after the transfer. The dog-leg also creates a vertical dispersion corresponding to a dispersion function of

$$\eta(V) = 40 \text{ cm}$$

For $\frac{\Delta p}{p} = \pm 0.33\%$ this adds to the vertical beam height an amount

$$\pm (0.4 \text{ m}) \times (3.3 \times 10^{-3}) = \pm 1.32 \text{ mm}$$

The increases in beam size due to both the betatron mismatch and the vertical dispersion are small and acceptable. It is possible to place quadrupoles in the transfer beam line to match both betatron and dispersion functions, but this complication is quite unnecessary.

J. EXTRACTION FROM SYNCHROTRON

The details of the extraction system should be studied together with the spill-stretcher ring. All we want to point out here is that it is possible to vertically deflect the 16 GeV beam in the straight section to clear the 25 cm half-height of the downstream synchrotron magnet. Assuming that the entire straight-section length S is filled with vertical bending magnets having a field strength B, to get a 25 cm displacement at the downstream end we need

$$\frac{BS}{B\rho} \times \frac{S}{2} = 25 \text{ cm}$$

With $B\rho$ = 564 kGm and $S \cong 5$ m, this gives B = 11.3 kG which is quite reasonable. Furthermore, if one is willing to drill a beam hole in the yoke of the downstream magnet the required displacement can be reduced to, say 13 cm. This displacement can be easily produced by a magnet with $B\ell$ = (11 kG) x (1.7 m) = 18.7 kGm which deflects the beam by an angle of

$$\frac{B\ell}{B\rho} = \frac{18.7 \text{ kGm}}{564 \text{ kGm}} = \frac{1}{30} \text{ rad}$$

placed near the upstream end of the straight section. In reality the required magnet strengths are likely to be substantially larger than these. Nevertheless this does serve to point out that even with the smaller than optimal ring and without matched long straight section, extraction of the full energy beam can be accomplished without too much difficulty.

References

1. L.C. Teng, "A Fast-Cycling Synchrotron Kaon Factory for TRIUMF and the Injection Scheme which makes it Practicable." TRIUMF Design Note TRI-DN-81-16 (Nov. 1981).

2. J.R. Richardson, "Some Considerations on the Relative Radii of the Accumulator Ring and TRIUMF" TRIUMF Design Note TRI-DN-81-19 (Nov. 1981)

Figure 1 Synchrotron lattice - printout of SYNCH program

```
                    16.0 GEV KINETIC ENERGY.

***  BRHO   =              //  564.1327
***  BZ     =              //  11.360738
***  BL     =              //  2.6

***  O      DRF            //  0.3000
***  OO     DRF            //  0.3000
***  OOO    DRF            //  5.1573

***  GF     =              //  40.7
***  GD     =              //  -35.7
***  MUX    =              //  .247
***  MUY    =              //  .247


***  S/R    SUB     0   0 //
.......................................................................................................
***  BF     MAG            //  BL        GF        BRHO      BZ        $
***  BD     MAG            //  BL        GD        BRHO      BZ        $
***  .HC    DML            //  O    BD   OO   BF   OOO  BF   OO   BD   O
***  HC     MMM            //  .HC
***         END     0   0 //
.......................................................................................................

***         FITQ           //  S/R  HC   GF   GD      1    1MUX      MUY

PARAMETER REPLACEMENTS MADE BY FITTING
      1  OF GF    =    38.689901              1  OF GD    =   -36.325059


***  RING   CYC        30 //  .HC
```

POS	S(M)	NUX	NUY	BETAX(M)	BETAY(M)	ETAX(M)	ETAY(M)	ETAS(M)	ALPHAX	ALPHAY	DETAX	DETAY
0	0.0000	0.00000	0.00000	5.64499	27.71747	1.09050	0.00000	0.00000	-.00000	-.00000	.00000	0.00000
1 O	.3000	.00845	.00172	5.66093	27.72072	1.09050	0.00000	0.00000	-.05314	-.01082	.00000	0.00000
2 BD	2.9000	.06817	.01921	10.24809	17.50260	1.40714	0.00000	.06256	-1.96070	3.34799	.25245	0.00000
3 OO	3.2000	.07258	.02210	11.46718	15.55658	1.48287	0.00000	.06256	-2.10273	3.13872	.25245	0.00000
4 BF	5.8000	.09970	.06375	17.50311	7.55959	1.82418	0.00000	.15204	.15067	.39409	.00000	0.00000
5 OOO	10.9573	.14730	.18325	17.50311	7.55959	1.82418	0.00000	.15204	-.15067	-.39409	.00000	0.00000
6 BF	13.5573	.17442	.22490	11.46718	15.55658	1.48287	0.00000	.24153	2.10273	-3.13872	-.25245	0.00000
7 OO	13.8573	.17883	.22779	10.24809	17.50260	1.40714	0.00000	.24153	1.96070	-3.34799	-.25245	0.00000
8 BD	16.4573	.23855	.24528	5.66093	27.72072	1.09050	0.00000	.30407	.05314	.01082	.00000	0.00000
9 O	16.7573	.24700	.24700	5.64499	27.71747	1.09050	0.00000	.30407	-.00000	-.00000	.00000	0.00000

```
CIRCUMFERENCE =   502.7190 M          THETX =   6.28318524 RAD      NUX =    7.41000      DNUX/(DP/P) =   -7.01256
       RADIUS =    80.0102 M    THETY(   9) =   0.00000000 RAD      NUY =    7.41000      DNUY/(DP/P) =  -10.49428
(DS/S)/(DP/P) =   .0181466
                                   TGAM = (    7.42339,    0.00000)

MAXIMA    --- BETX(   5) =    17.50311    BETY(   1) =    27.72072    ETAX(   5) =    1.82418    ETAY(   9) =    0.00000
MINIMA    --- BETX(   9) =     5.64499    BETY(   5) =     7.55959    ETAX(   9) =    1.09050    ETAY(   9) =    0.00000
```

Figure 2 Cross section of synchrotron

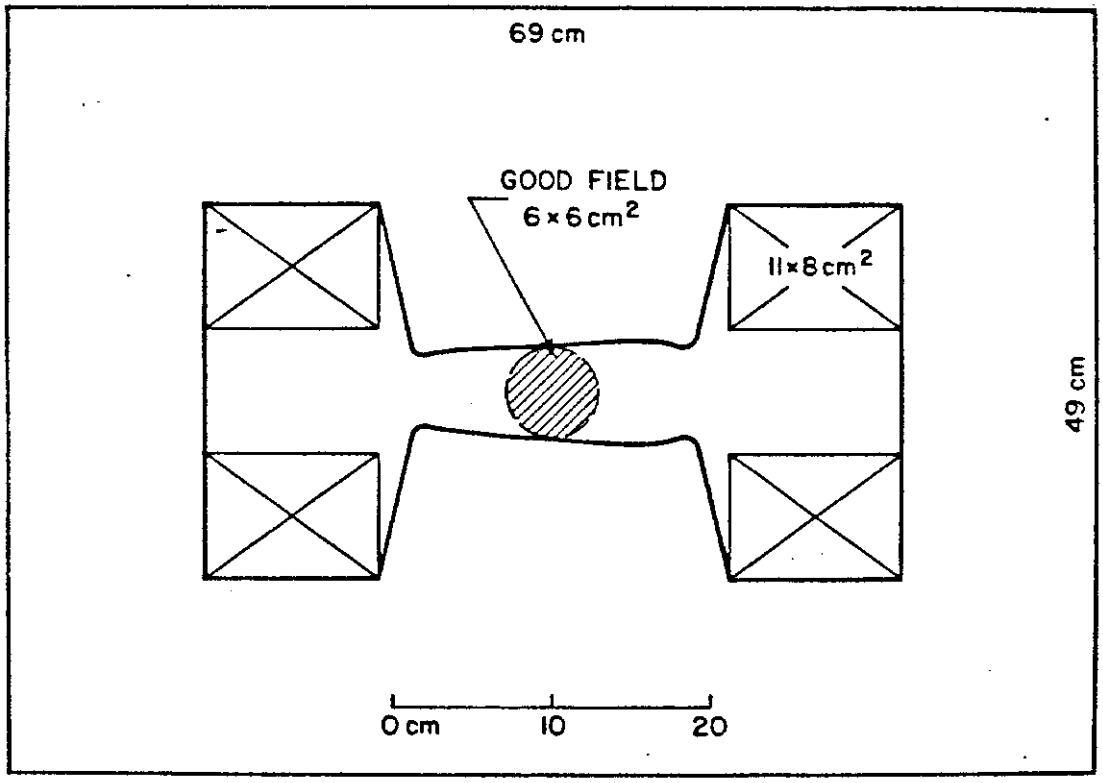

Figure 4 Cross section of accumulator magnet

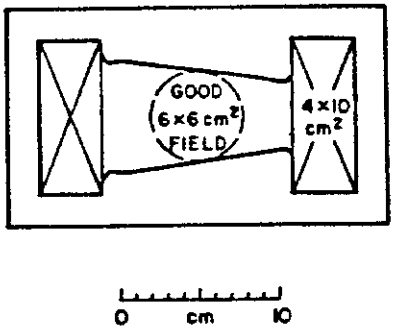

- SYNCH RUN KAON KAON2 LATTICE.

Figure 3 Accumulator lattice - printout of SYNCH program

```
                    16.0 GEV KINETIC ENERGY.

***  BRHO   =          //  564.1327
***  BZ     =          //  18.461199
***  BL     =          //  1.6

***  O      DRF        //  0.3000
***  OO     DRF        //  0.3000
***  OOO    DRF        //  9.1573

***  GF     =          //  40.7
***  GD     =          //  -35.7
***  MUX    =          //  .247
***  MUY    =          //  .247


***  S/R    SUB    0   0 //
.......................................................................................................
***  BF     MAG        //  BL        GF        BRHO      BZ        $
***  BD     MAG        //  BL        GD        BRHO      BZ        $
***  .HC    BML        //  O    BD   OO   BF   OOO  BF   OO   BD   O
***  HC     MMM        //  .HC
***         END    0   0 //
.......................................................................................................

***         FITQ       //  S/R  HC   GF   GD      1    1MUX      MUY

PARAMETER REPLACEMENTS MADE BY FITTING
      1  OF GF    =    78.308403          1  OF GD    =  -72.323282

***  RING   CYC        30 //  .HC
```

POS	S(M)	NUX	NUY	BETAX(M)	BETAY(M)	ETAX(M)	ETAY(M)	ETAS(M)	ALPHAX	ALPHAY	DETAX	DETAY
0	0.0000	0.00000	0.00000	6.42659	27.91153	1.04680	0.00000	0.00000	.00000	-.00000	.00000	0.00000
1 O	.3000	.00742	.00171	6.44059	27.91476	1.04680	0.00000	0.00000	-.04660	-.01075	.00000	0.00000
2 BD	1.9000	.04219	.01198	9.42367	19.76120	1.26636	0.00000	.05861	-2.01830	4.52965	.28205	0.00000
3 OO	2.2000	.04695	.01457	10.68311	17.14141	1.35098	0.00000	.05861	-2.17982	4.20298	.28205	0.00000
4 BF	3.8000	.06662	.03503	13.97100	10.21489	1.58344	0.00000	.13744	.37343	.62120	.00000	0.00000
5 OOO	12.9573	.18038	.21197	13.97100	10.21489	1.58344	0.00000	.13744	-.37343	-.62120	.00000	0.00000
6 BF	14.5573	.20005	.23243	10.68311	17.14141	1.35098	0.00000	.21626	2.17982	-4.20298	-.28205	0.00000
7 OO	14.8573	.20481	.23502	9.42367	19.76120	1.26636	0.00000	.21626	2.01830	-4.52965	-.28205	0.00000
8 BD	16.4573	.23958	.24529	6.44059	27.91476	1.04680	0.00000	.27487	.04660	.01075	.00000	0.00000
9 O	16.7573	.24700	.24700	6.42659	27.91153	1.04680	0.00000	.27487	.00000	.00000	.00000	0.00000

```
CIRCUMFERENCE =   502.7190 M          THETX =   6.28318516 RAD      NUX =    7.41000      DNUX/(DP/P) =   -6.04108
       RADIUS =    80.0102 M    THETY(   9) =   0.00000000 RAD      NUY =    7.41000      DNUY/(DP/P) =  -11.30719
(DS/S)/(DP/P) =   .0164030
                                   TGAM = (   7.80797,    0.00000)

MAXIMA    --- BETX(   5) =    13.97100    BETY(   1) =    27.91476    ETAX(   5) =    1.58344    ETAY(   9) =    0.00000
MINIMA    --- BETX(   9) =     6.42659    BETY(   5) =    10.21489    ETAX(   9) =    1.04680    ETAY(   9) =    0.00000
```

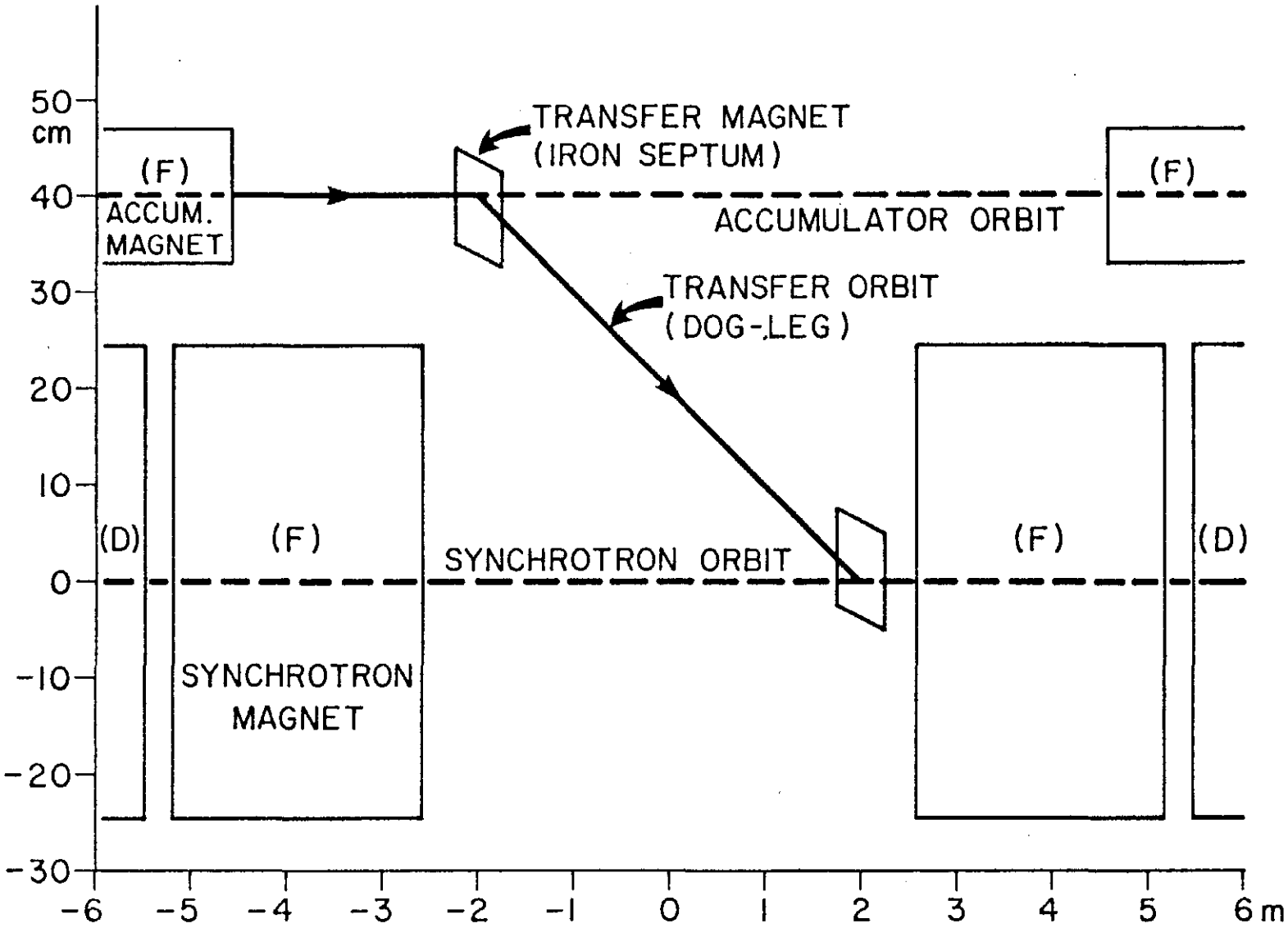

Fig. 5 Elevation view of beam transfer between accumulator and synchrotron