Fermi National Accelerator Laboratory

FN-329
0402.000

COMMENTS ON STABLE MOTIONS IN NONLINEAR COUPLED RESONANCES

S. Ohnuma

August 18, 1980

Summary

It is shown that, of all nonlinear coupled resonances of the form

$$m\,\nu_1 + n\,\nu_2 = k$$

where m, n and k are positive integers and $m + n > 2$, those with m or n = 1 exhibit a different property compared to others in their stable regions of phase space. The difference explains the paradoxical result obtained by Sturrock[1] and Guignard[2] that there are points of arbitrarily small amplitudes which lie outside the stable region.

Operated by Universities Research Association Inc. under contract with the United States Department of Energy

Consider a coupled resonance of the form

$$(2p)\nu_1 + (2q)\nu_2 = n + \varepsilon \tag{1}$$

where $(2p)$, $(2q)$ and n are <u>positive</u> integers. It is further assumed that $p \leqslant q$ so that $p = 1/2, 1, 3/2, \ldots$ and $q = 1, 3/2, 2, \ldots$. In the tune diagram, it is convenient to define the point on the resonance line that is nearest to the point (ν_1, ν_2),

$$(2p)\nu_{10} + (2q)\nu_{20} = n, \tag{2}$$

$$\nu_1 = \nu_{10} + \varepsilon_1, \quad \nu_2 = \nu_{20} + \varepsilon_2, \tag{3}$$

$$\varepsilon_1 = \varepsilon(2p)/[(2p)^2+(2q)^2], \quad \varepsilon_2 = \varepsilon_1 \ (q/p). \tag{4}$$

The distance from the point (ν_1, ν_2) to the resonance line is

$$\Delta \equiv [\varepsilon_1^2 + \varepsilon_2^2]^{1/2} = |\varepsilon|/[(2p)^2+(2q)^2]^{1/2}. \tag{5}$$

When one retains only the resonance-driving term, the Hamiltonian in terms of the action-angle variables (I, a) can be written in the form

$$H = (\varepsilon_1/2)(2I_1) + (\varepsilon_2/2)(2I_2) + D\cdot\cos(\phi)(2I_1)^p(2I_2)^q \tag{6}$$

where $$\phi = (2p)\ a_1 + (2q)\ a_2 + \delta. \tag{7}$$

The amplitude D and the phase δ of the driving term can be expressed in terms of the machine parameters and the parameters of the nonlinear force which is driving the resonance. By writing equations of motion for I_1 and I_2, one can easily verify that the quantity

$$C \equiv (2I_1)/(2p) - (2I_2)/(2q) \tag{8}$$

is an invariant, that is, $dC/d\theta = 0$ with the independent variable θ.

Analogous to the concept of fixed points in the two-dimentional phase space, one can define "fixed lines" in the four-dimentional space (I_1, a_1, I_2, a_2) from the following three conditions:

$$dI_1/d\theta = dI_2/d\theta = d\phi/d\theta = 0. \tag{9}$$

Conditions for I_1 and I_2 are satisfied (excluding the trivial solution $I_1 = I_2 = 0$) by taking $\sin(\phi) = 0$. If one defines the quantity w,

$$w \equiv [\varepsilon/|\varepsilon|]\cos(\phi) \ , \tag{10}$$

it must be +1 or -1. The condition for ϕ is then

$$\varepsilon = -[\varepsilon/|\varepsilon|]w\cdot D\cdot(2I_1)^{p-1}(2I_2)^{q-1} \times [(2p)^2(2I_2) + (2q)^2(2I_1)]. \tag{11}$$

Since D is positive by definition, this is satisfied only for $w = -1$. Action variables I_1 and I_2 are related to the emittance of the beam E_1 and E_2,

$$2I_1 = E_1/\pi \quad , \quad 2I_2 = E_2/\pi \tag{12}$$

and one finds the expression for the "bandwidth" given by Guignard,[2]

$$\Delta e \equiv 2|\varepsilon| = 2D\ (E_1/\pi)^{p-1}(E_2/\pi)^{q-1} \times [(2p)^2(E_2/\pi) + (2q)^2(E_1/\pi)]. \tag{13}$$

A peculiar feature of this expression is that, for $p = 1/2$, the width increases indefinitely as E_1 approaches zero while E_2 is fixed. This is contrary to the meaning of resonance width as it is generally understood. This peculiar feature is related to the (erroneous) statement made by Sturrock in connection with the resonance $\nu_1 + 2\nu_2 = n$:

"The most surprising feature of the stability diagram of Fig. 28

is that there are points of arbitrarily small amplitudes u, v, which lie outside the stable region." [1]
The purpose of this note is to examine in detail why resonances of the form $\nu_1 + (2q)\nu_2 = n$ are different from others. The special property of these resonances has been pointed out by Lysenko[3] but his argument is qualitative. The discussion given below is intended to delineate the point and also to show how to find the resonance width which is different from the one given by Guignard.

Since the Hamiltonian, Eq. (6), is independent of the variable θ, it is an invariant. From two invariants H and C, Eq. (8), one can construct two invariant expressions Φ_1 and Φ_2,

$$\Phi_1 = H + (\varepsilon/2)\cdot C\cdot (2q)^2/[(2p)^2+(2q)^2]$$
$$= (\varepsilon/2)(2I_1)/(2p) + D\cdot\cos(\phi)\cdot(2I_1)^p(2I_2)^q, \tag{14}$$

$$\Phi_2 = H - (\varepsilon/2)\cdot C\cdot (2p)^2/[(2p)^2+(2q)^2]$$
$$= (\varepsilon/2)(2I_2)/(2q) + D\cdot\cos(\phi)\cdot(2I_1)^p(2I_2)^q . \tag{15}$$

One can further simplify the form of two invariants by the normalization

$$\lambda \equiv A\cdot[\varepsilon/|\varepsilon|]\cdot\Phi_1 , \quad \mu \equiv A\cdot[\varepsilon/|\varepsilon|]\cdot \Phi_2 \tag{16}$$

where

$$A \equiv (2/|\varepsilon|)(2D/|\varepsilon|)^{1/s}(2p)^{p/s}(2q)^{q/s}, \tag{17}$$

$$s \equiv p + q - 1. \tag{18}$$

The corresponding normalization of two action variables is

$$u^2 \equiv (2I_1)\cdot(2D/|\varepsilon|)^{1/s}(2p)^{q'/s}(2q)^{q/s}, \tag{19}$$

$$v^2 \equiv (2I_2)\cdot(2D/|\varepsilon|)^{1/s}(2p)^{p/s}(2q)^{p'/s}, \tag{20}$$

where $p' \equiv 1 - p$ and $q' \equiv 1 - q$. The final form of two invariants is

$$\lambda = u^2 + u^{2p} v^{2q} \cdot w, \tag{21}$$

$$\mu = v^2 + u^{2p} v^{2q} \cdot w. \tag{22}$$

For physically meaningful solutions, both u and v must be positive (or zero) and $|w|$ must be less than or equal to unity. One can eliminate the variable v using the relation

$$v^2 = u^2 - (\lambda - \mu), \tag{23}$$

and the problem is reduced to finding the amplitude u such that the absolute value of

$$w = \frac{\lambda - u^2}{u^{2p} \, (u^2 - \lambda + \mu)^q} \tag{24}$$

is less than or equal to unity. The motion is stable if this condition restricts the value of u within a finite range. In the (λ, μ) space, there are three regions with different characteristics:

(1) First quadrant, $\lambda > 0$ <u>and</u> $\mu > 0$. See Fig. 1A. The function $w(u)$ has one minimum point. If the minimum point is below -1, the motion is stable (curve S). If the point is above -1 (curve U), u can take any value and the motion is unstable. The limiting case is the curve L.

(2) $\lambda = 0$ and $\mu > 0$. See Fig. 1B for $p = 1/2$. There is no stable motion for other values of p.

(3) Second, third and fourth quadrants, $(\lambda<0, \mu>0)$, $(\lambda<0, \mu<0)$ and $(\lambda>0, \mu<0)$. Note that $\mu = 0$ is excluded. The function $w(u)$ can have one maximum and one minimum points. See Fig. 1C. It will be shown below that there is no stable motion of this class <u>unless $p = 1/2$</u>

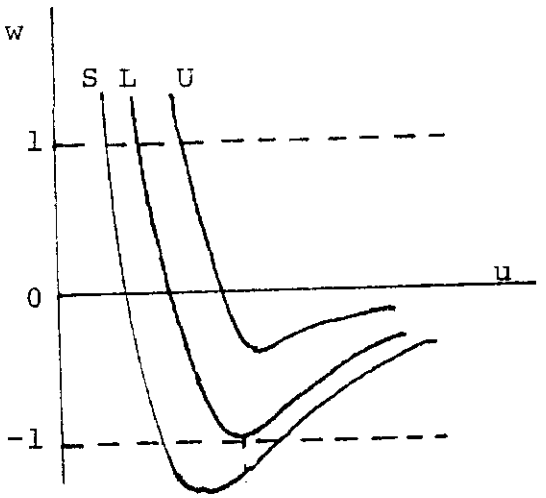

Fig. 1A

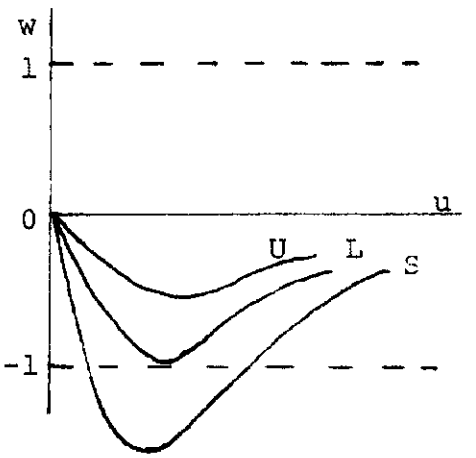

Fig. 1B

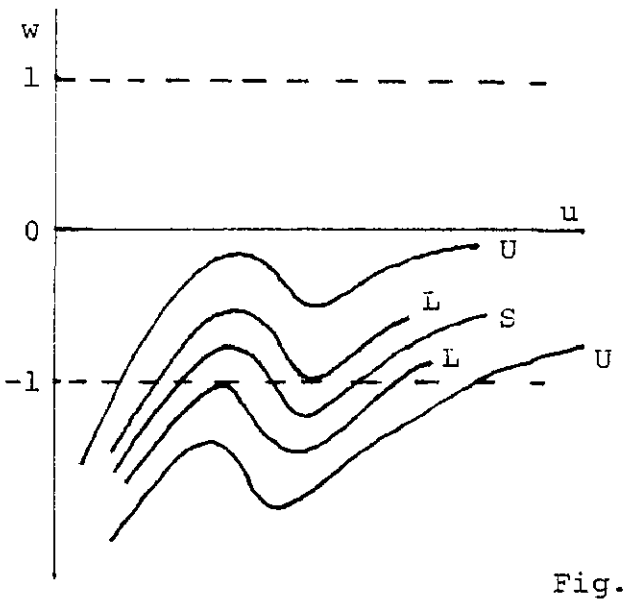

Fig. 1C

The maximum or minimum points are solutions of the condition

$$dw(u)/du = 0$$

which takes the form, with $x \equiv u^2$,

$$(2s)\cdot x^2 - 2[(s+p)\lambda+(1-p)\mu]\cdot x + (2p)\lambda(\lambda-\mu) = 0 \tag{25}$$

and the solutions are

$$u_M{}^2 = 1/(2s)\cdot[(s+p)\lambda+(1-p)\mu \pm \sqrt{M}], \tag{26}$$

$$M \equiv (s-p)^2\lambda^2 + (1-p)^2\mu^2 + 2[(s+p)+p(s-p)]\lambda\mu\ . \tag{27}$$

The corresponding values of v^2 are

$$v_M{}^2 = u_M{}^2 - (\lambda - \mu)$$

$$= (1/2s)\cdot[-(s-p)\lambda+(2s-p+1)\mu \mp\sqrt{M}]. \tag{28}$$

Since $u_M{}^2$ must be real, M must be either 0 or positive.

1) $p = 1$.

$$M = 4s\lambda\cdot[\mu + \frac{(s-1)^2}{4s}\cdot\lambda] > 0 \tag{29}$$

2) $p \neq 1$.

$$M = (1-p)^2(\mu + \xi\lambda)(\mu + \eta\lambda) > 0. \tag{30}$$

Comparing this expression with Eq. (27), one sees that both ξ and η are non-negative.

In (λ, μ) space, conditions (29) and (30) exclude the shaded areas as shown in Figs. 2A - 2D.

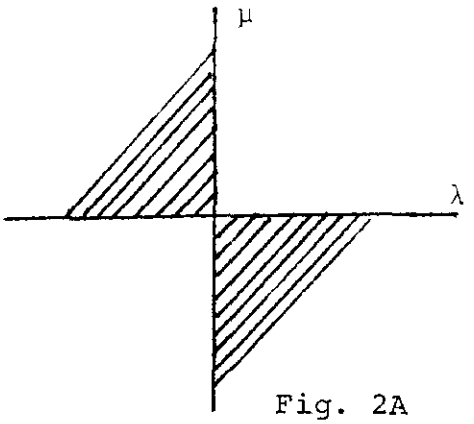

Fig. 2A
p=q=s=1

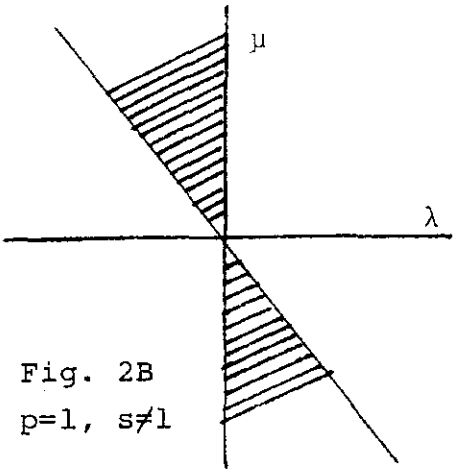

Fig. 2B
p=1, s≠1

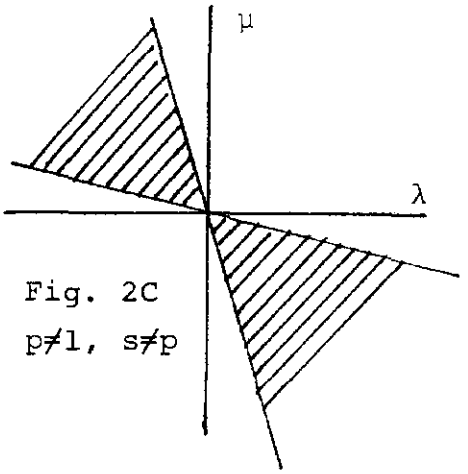

Fig. 2C
p≠1, s≠p

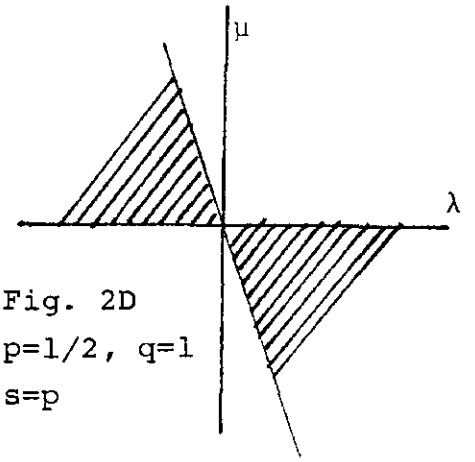

Fig. 2D
p=1/2, q=1
s=p

From Eq. (26), it is obvious that there are at most two values of u_M. At the same time, from Eq. (24) for w(u), it is already known that there is one minimum point when both λ and μ are positive. The remaining problem is then to find the conditions for two values of u_M to exist in the second, third and fourth quadrants of (λ, μ) space.

From Eq. (28), in order to have two real values of v_M, it is necessary to satisfy the condition

$$\mu > \frac{s - p}{2s - p + 1} \cdot \lambda \quad . \tag{31}$$

Since $s \geqslant p$, the coefficient in front of λ in Eq. (31) is non-negative. This condition excludes the fourth quadrant $\lambda > 0$ and $\mu < 0$. Two values of u_M are possible if and only if the following two conditions are satisfied [see Eq. (26)],

$$(s+p)\lambda + (1-p)\mu > 0, \tag{32}$$

$$[(s+p)\lambda+(1-p)\mu]^2 \geqslant M \tag{33}$$

The condition (33) is equivalent to $\mu \geqslant \lambda$ in the second and third quadrants of (λ, μ) space. However, this is automatically satisfied because of the condition (31). The coefficient in front of λ is always less than unity,

$$\frac{s - p}{2s - p + 1} < 1. \tag{34}$$

As for the condition (32),

(1) $p = 1$, $\lambda > 0$ (fourth quadrant) which is already excluded.

(2) $p > 1$, $\mu < [(s+p)/(p-1)]\cdot\lambda$

The coefficient in front of λ is always larger than 3 and the condition is in contradiction with the condition (31).

(3) $p = 1/2$,

$$\mu > - 2q\cdot\lambda \tag{35}$$

This condition as well as the condition (31) are satisfied in the second quadrant $\lambda < 0$ and $\mu > 0$.

By evaluating ξ and η in Eq. (30) for $p = 1/2$,

$$(\xi, \eta) = (6s + 1) \pm 4\sqrt{s(2s + 1)}, \tag{36}$$

one can see that

$$\eta < (2q) < \xi. \tag{37}$$

In conclusion, stable motions are possible if

1) $\lambda > 0$ and $\mu > 0$ for $p \neq 1/2$.

2) $\lambda \geqslant 0$ and $\mu > 0$ <u>or</u> $\lambda < 0$ and $\mu > -[6s+1 + 4\sqrt{s(2s+1)}]\cdot\lambda$ for $p = 1/2$.

The resonance studied by Sturrock[1] corresponds to $p = 1/2$ and $q = 1$. He missed the region $\lambda < 0$ and $\mu \geqslant -8\lambda$ which is shown in Fig. 1C. If λ is limited to positive values, one finds from Eq. (21) with $w = -1$,

$$u^{2(p-1)}v^{2q} < 1 \ . \tag{38}$$

For $p = 1/2$, this leads to the exclusion of points near the origin as stated by Sturrock. In order to find the stable region in the phase space or, equivalently, in (u, v) space, one must solve $[dw(u)/du] = 0$ together with $w(u) = -1$ for $u = u_M$, the maximum possible stable amplitude. Analytical solutions are possible for ($p=1/2$, $q=1$)[1] and for ($p=q=1$).[4] For $\nu_1 + 2\,\nu_2 = n$, the limiting values (u_M, v_M) of Figs. 1A and 1B satisfy the relation

$$v_M^{\ 2} = 2\cdot u_M(1 - u_M) \tag{39}$$

which is equivalent to the expression of bandwidth, Eq. (13), found by Guignard.[2] If the case represented by Fig. 1C is included, one finds that the stable motion is confined in the region bounded by $u = 0$, $v = 0$, Eq. (39) and

$$v = (1 + u)/2 \tag{40}$$

as shown in Fig. 3.

Finally, it is perhaps important to include at least the lowest-order, phase-independent terms of the form

$$Au^4 + Bu^2v^2 + Cv^4 \tag{41}$$

in the expressions (21) and (22). The analysis will then become much more complicated.

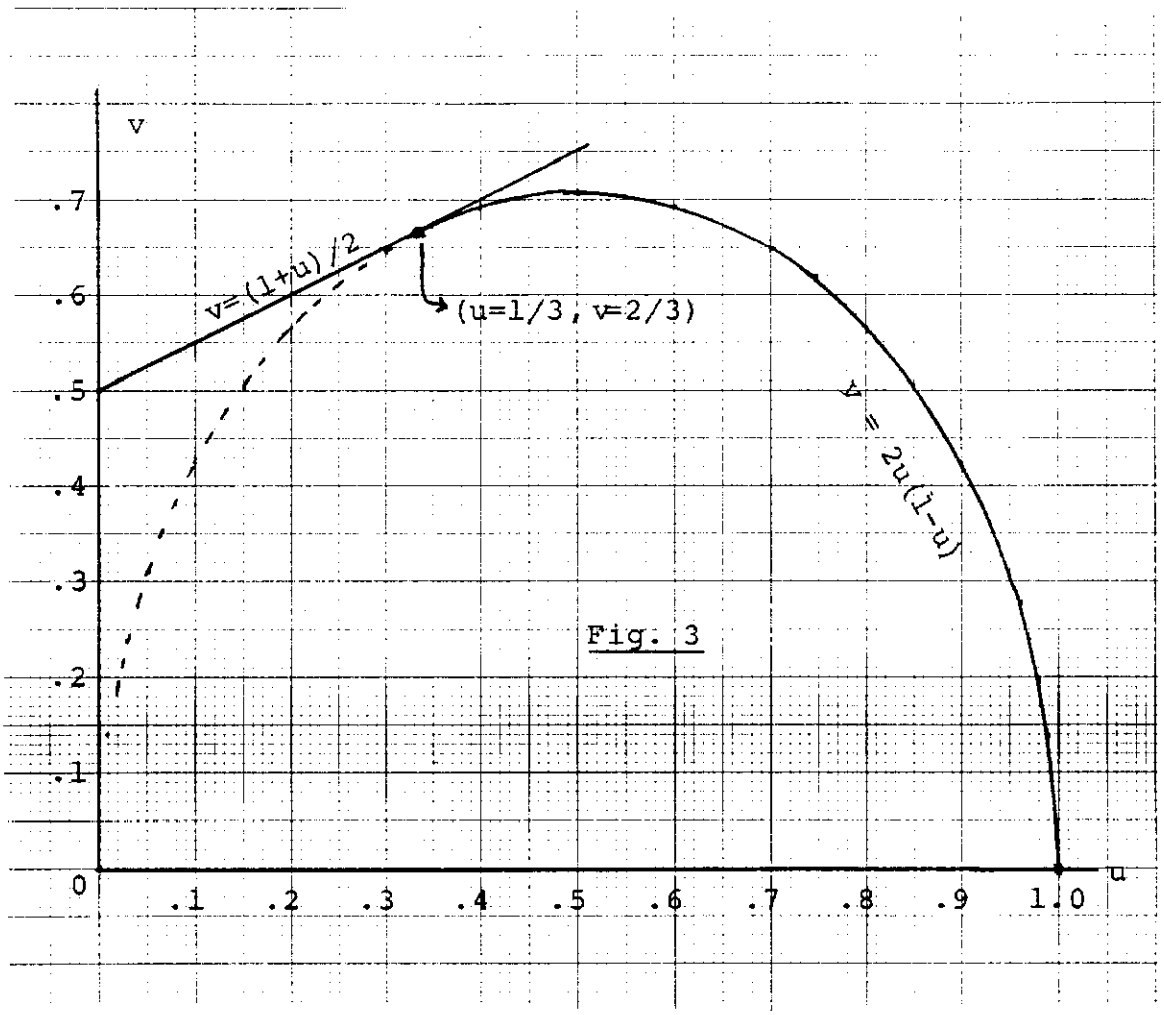

Fig. 3

References

1. P. A. Sturrock, Annals of Physics, 3, 113 (1958), Chapter 10.
2. G. Guignard, CERN-ISR-MA/75-35, 31st August, 1975; CERN 78-11, 10 November, 1978.
3. W. P. Lysenko, Particle Accelerators, 5, 1 (1973). See Fig. 4.
4. S. Ohnuma, Fermilab TM-507, July 15, 1974.