FN-313
2100.000

Fermilab

HIGH QUALITY DOMESTIC ACRYLIC SCINTILLATOR AND WAVEBAR

J. A. APPEL, M. ATAC, P. MANTSCH

DECEMBER 26, 1978

INTRODUCTION

As the energies of modern accelerators have increased, calorimeters have become an increasingly important part of the detectors used in experiments. The statistical fluctuations which limit the inherent energy resolutions of these detectors become smaller as the energies of detected particles increases.

A major fraction of modern calorimeters have used light emitting materials (scintillators) and photomultiplier tubes to generate signals for processing. At low energy, the light emitted in a calorimeter limits the attainable energy resolution. For this reason, a premium has been paid for the amount of light emitted by the shower of a particle in the calorimeter. However, at high energies, the total light output has been less important and it has become possible to sacrifice light for other features; uniformity of response, ease of light collection, and cost as examples. In order to reduce cost, a number of acrylic (methyl methacrylate polymer) based materials have been developed by CERN with the chemical firm Röhm, GBMH Chemische Fabrik (Darmstadt, Germany). Until recently, these materials have not been available from domestic producers in the quality which has been achieved in Europe. We report here on materials which have been produced domestically by two fabricators and which are equal in quality to the Röhm product.

We will report on two characteristics of the new domestic acrylic scintillator. These are 1). Initial light output and 2). Reabsorption of light (as indicated by attenuation lengths measured in long test samples). All tests have been

performed using the CERN formula for PLEXIPOP I (1% PPO, 0.01% POPOP, and 1% Naphthalene by weight).

In addition to the acrylic scintillator, one vendor has been asked to produce another doped acrylic material. This material, used as a 'wavebar' to collect light from primary scintillators and transport it to photomultiplier tubes, is doped with 90 mg/ℓ BBQ. This wavebar material can be used to reduce the number of photomultiplier tubes in an experiment or to transport light from otherwise inaccessible locations to photomultiplier tubes. We also report on the attenuation length of this material.

The two manufacturers referred to are Polycast Technology, Inc. of Stamford, Connecticut, and Polytech, Inc. of Owensville, Missouri. The latter produced the BBQ doped acrylic sheet.

TEST SETUP

In all tests, a number of layers of ¼ inch thick scintillator material were viewed by an RCA 8055 photomultiplier (S-11 photocathode). Signals were collected when cosmic rays traversed these layers as indicated by a coincidence of two scintillation counters placed on opposite sides of the test sample. The two trigger counters extended past the test sample allowing simultaneous determination of the pedestal (no light output from the test sample). Anode signals from the 8055 were integrated and histogramed by standard electronic circuitry (LRS qVt 3001 module).

In all tests each layer of scintillator was separately wrapped in aluminum foil. All edges of scintillator were machined on the Fermilab Physics Department P4 diamond headed flycutter and no additional hand buffing of the edges was performed. All other surfaces were as received from the manufacturer except for removal of protective paper and a dry wipe to remove the residue from machining. No chemical solvents were applied.

Figure 1 indicates the test setup for each of the two tests performed on the acrylic scintillator. In the relative initial light output test, comparisons

were made against a Pilot F sample. Pilot F scintillator has light output nominally 64% of anthracene and 107% of NE110. Particles entered each sample at 10 cm from the edge of the scintillator near the photomultiplier tube and no attenuation corrections were applied. In this test, all sides were covered with aluminum foil except the side facing the photomultiplier. In the attenuation length measurements, the trigger coincidence counters were moved to various positions along the long test samples (each ¼ X 4 X 100 inches^3). The phototube and test sample remained in fixed positions. In no test was any special optical coupling applied between the photomultiplier and test strips. A small air gap always existed. In those tests where filters are indicated, Wratten filters were placed between the photomulitplier tube and the test scintillator with no added optical coupling.

Figure 2 indicates the test setup for determining the attenuation length of acrylic wavebar. Light from five pieces of Pilot F scintillator (total thickness = 1 3/8 inches) was directed into the wavebar at various positions along its length. Each scintillator was wrapped in black felt and no reflector was used. A small air gap was left between the scintillator and wavebar and photomultiplier as before. The back side and edges of the wavebar were covered with aluminum foil while the front face was left open along its entire length. The wavebar sample as ¼ X 4 X 100 inches^3.

DATA

A typical distribution of data is presented in Figure 3. The lower peak is that for particles which pass through the trigger counters but completely miss the test sample. The higher peak is due to light from the test sample itself.

The raw data for relative light output are given in Table I for the acrylic scintillator. We report the pedestal subtracted channel of the peak of the distribution and channels of the half peak values of the distribution. From the lower half height location, we calculate a nominal number of photoelectrons, N defined as:

$$N = \left[\frac{2(\text{peak} - \text{half height})}{2.36 \text{ peak}}\right]^{-2}$$

We scale this number for thickness and quote all numbers per 3/8 inch thickness. Although it is not as precise a measurement, it is an indication of the reliability of the data and provides a number which can be used to estimate the photostatistical contribution to the resolution of a particular calorimeter design. In principle, the number N, should scale as the peak location. Such a scaling is given in the last column.

We repeat this format in reporting the raw attenuation data in Table II. However, Table II is divided into six sections, one each for strips with blackened far ends from each manufacturer, one each for strips with aluminum foil at the far ends from each manufacturer, and one each for Polytech strips with Wratten 2E and 4 filters between scintillator and photomultiplier tube. The data is also graphed in Figure 4.

Table III and Figure 5 present similar data for the wavebar material.

RESULTS

The relative light outputs for a near position of the domestic products can be compared against a sample received directly from Röhm. The attenuation length results for long samples are compared to a description of the Röhm product given by W. Kienzle, et al.[1] for their samples. Table 1 in their report indicates a relative light output for Plexipop I of 21% of NE110 (corresponding to 20% of Pilot F, nominally). The attenuation length is reported as 2.0m without filtering the light to the photomultiplier tube and 2.8m when a filter with a cutoff of 4350 A was used.[2]

In order to be quantitative, our data were fit to an attenuation curve described by a single exponential. As can be seen in Figure 4, some of the data is not well fit by such a single exponential. In order to help in comparisons with data from CERN, fits were obtained over a number of ranges. The results of the fits as well as the fitting function are given in Table IV.

CONCLUSIONS

In absolute light output, the two domestic samples compare closely to the

European sample. The values relative to Pilot F (or NE110 by extrapolation) are larger than quoted by Kienzle, et al. However, we do not attach any particular significance to this. The Pilot F samples are of unknown origin and were used only to monitor the stability of the test results. We, as Kienzle, et al. quote 10% uncertainties on the results based on their reproducibility. One additional measure of relative light output can be obtained by comparing N_0, the extrapolations of the attenuation formulae to zero length. In these values, we do not see much difference between the two domestic products. It should be noted that these extrapolations are a factor of two lower than the direct measurement of photostatistics. This is due to the differences in geometry and contribution of very short wavelength light.

The attenuation length data are difficult to compare because of differences in geometry, surface quality, and other details.[3] Nevertheless, the tests of Kienzle, et al. compare most directly with our fits for the range (0.5 to 2.0) meters. Since they appear to have corrected for the reflector at the far end, their attenuation lengths should be compared to our values obtained with the blackened far end. In comparison, the domestic product seems to be at least as good as the results reported from CERN.

The conclusion of these comparisons is that the currently available domestic production of acrylic scintillator matches the products available in Europe. The samples taken for testing were selected at random from a much larger order (30 sheets of 4 X 8 feet^2 material from each manufacturer). We have some reason to believe, therefore, that quality control can result in reproducible and high quality production. It is our experience that this is a recent achievement domestically.

Perhaps the most striking result in this work is the very long attenuation length attainable with filtering - as much as 16m when a #4 Wratten filter is used. However, this requires a serious loss of light. There is factor of nearly 3.5 loss of light even at the far end of our 2.5m samples. For a smaller loss of

light (a reduction of 25% at the far end), a Wratten #2E filter gives attenuation lengths approaching five meters.

TABLE I

RELATIVE LIGHT OUTPUT

Material	Channel Number			N per 3/8 Inch	
	Peak	½ Height$_{lo}$	½ Height$_{hi}$	Calculated	1.0 X Peak
Pilot F	100	89½	121	47½	100
Polycast Material	26	22	31½	22	26
Polytech Material	22	19	27¼	28	22
Röhm Material	26	22	31½	22	26

TABLE II

RAW ATTENUATION LENGTH DATA

A). Blackened Far End, Polycast Material

Distance From PM	Channel Number			N per 3/8 Inch	
(Inches)	Peak	½ Height$_{lo}$	½ Height$_{hi}$	Calculated	0.25 X Peak
19½	37	31	44	13	9
33½	31½	25	39¼	8	8
47½	27	21¼	34½	7½	7
61½	24	18	32	6	6
75½	20 3/4	15 3/4	27½	6	5
89½	18 3/4	14½	24¼	6	4½

TABLE II (CONT.)

B). Blackened Far End, Polytech Material

Distance From PM	Channel Number			N per 3/8 Inch	
(Inches)	Peak	½ Height$_{lo}$	½ Height$_{hi}$	Calculated	0.25 X Peak
19½	33	25½	42	8	8
33½	26½	19½	35	6	6½
47½	22	16	27	5½	5½
61½	19½	14	26	5	5
75½	18	12½	23½	4½	4½
89½	16½	11	22	4	4
C). Aluminum Foil Far End, Polycast Material					
19½	39¼	31 3/4	52½	9½	10
33½	36¼	30	46 3/4	11½	9
47½	33	26¼	41¼	8	8
61½	29¼	23¼	37½	8	7½
75½	26¼	20 3/4	35	8	6½
89½	26¼	21¼	34½	9½	6½
D). Aluminum Foil Far End, Polytech Material					
19½	29½	31¼	51¼	9½	10
33½	33	26	40	9½	8
47½	28¼	22	38	8½	7
61½	27	20½	36	7	7
75½	24½	17½	31	5	6
89½	25	19	33	7	6

TABLE II (CONT.)

E). Wratten 2E Filter Between Polytech Material And Photomultiplier Tube

Distance From PM	Channel Number			N per 3/8 Inch	
(Inches)	Peak	½ Height$_{lo}$	½ Height$_{hi}$	Calculated	0.25 X Peak
10	35	28	-	10½	8 3/4
20	34	27¼	-	10½	8½
34	30½	23½	-	8	7½
62	26	19	-	5 3/4	6½
90	24	16 3/4	-	4½	6
F). Wratten 4 Filter Between Polytech Material and Photomultiplier Tube					
20	8¼	4½	16½	2	2
34	7½	4½	12	2½	1 3/4
62	7½	3 3/4	12½	1 3/4	1 3/4
76	7½	3½	11½	1½	1 3/4
90	7¼	3½	13	1½	1 3/4

TABLE III

WAVEBAR ATTENUATION LENGTH DATA

Distance From PM	Channel Number			N Per 1 3/8 Inch	
(Inches)	Peak	½ Height$_{lo}$	½ Height$_{hi}$	Calculated	.45 X Peak
15½	31.7	21.9	-	14½	14¼
27½	26.5	14.6	-	7	12
39½	22.5	14.4	-	10 3/4	10
51½	18.6	10.5	-	7¼	8¼

TABLE IV

ATTENUATION LENGTH FIT PARAMETERS

Material	Attenuation Formula $N_0\ e^{-x/\lambda}$					
	Range: (0.5 - 1.5)m		Range: (0.5 - 2.0)m		Range: (0.5 - 2.3)m	
	N_0	λ(m)	N_0	λ(m)	N_0	λ(m)
Polycast, Black @ Far End	11.2	2.5	11.2	2.5	11.1	2.5
Polycast, Al @ Far End	11.3	3.7	11.4	3.6	11.1	4.0
Polytech, Black @ Far End	11.9	1.9	10.2	2.1	10.0	2.3
Polytech, Al @ Far End	10.6	2.5	11.5	2.8	11.1	3.3
Polytech, Wratten #2E Filter	9.4	4.3	-	-	9.2	4.9
Polytech, Wratten #4 Filter	2.1	12.5	-	-	2.1	15.8
Polytech Wavebar	39.8	1.7				

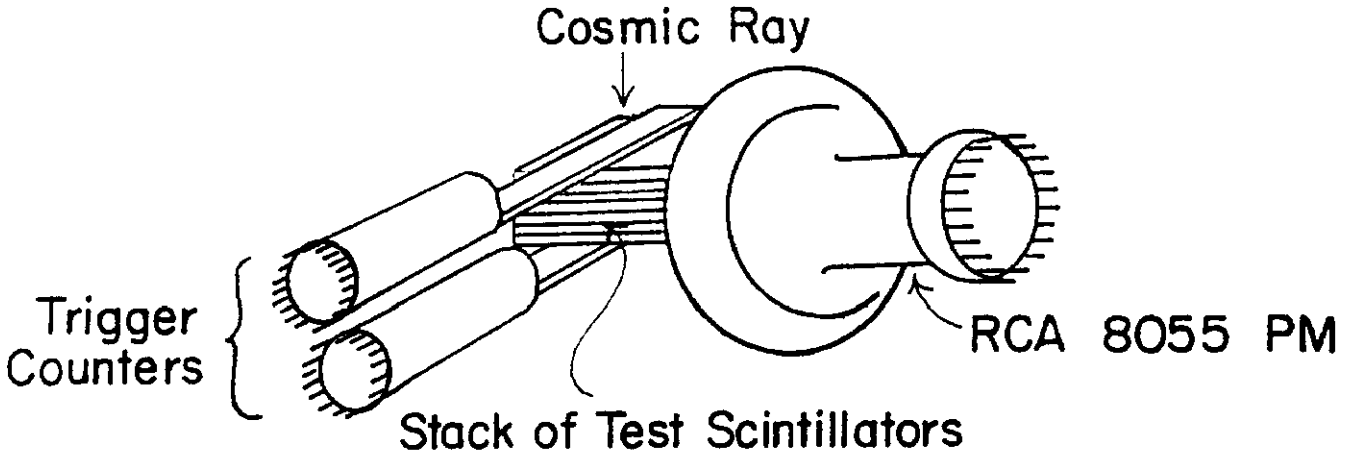

Fig. 1a
ABSOLUTE LIGHT TEST SETUP

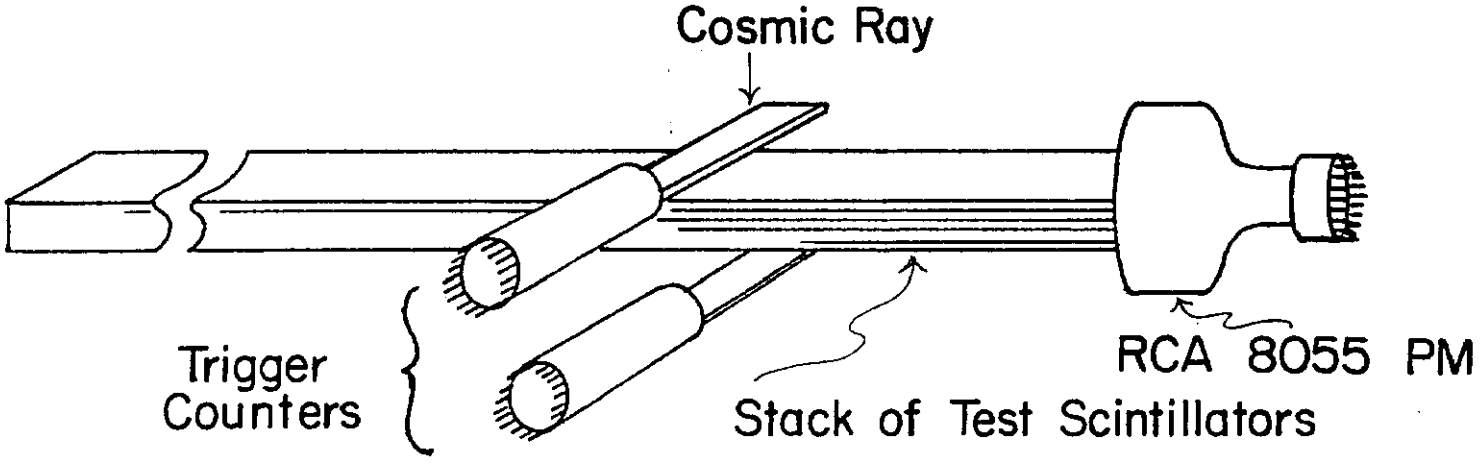

Fig. 1b
ATTENUATION TEST SETUP

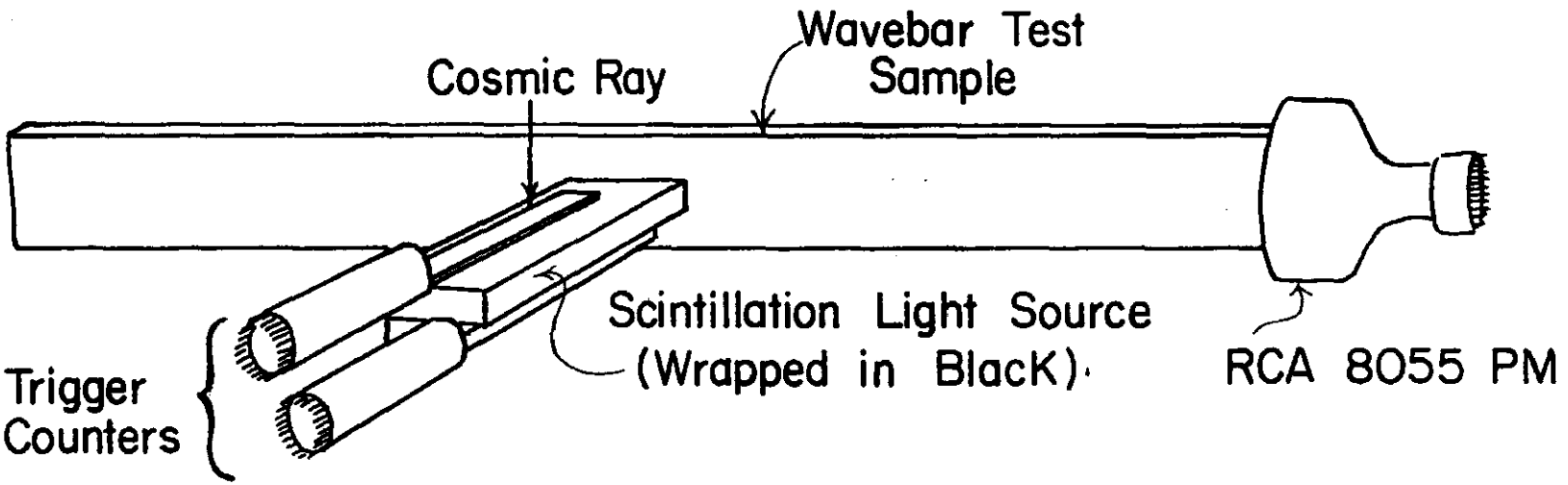

Fig. 2

SCHEMATIC DRAWING OF WAVEBAR TEST SETUP

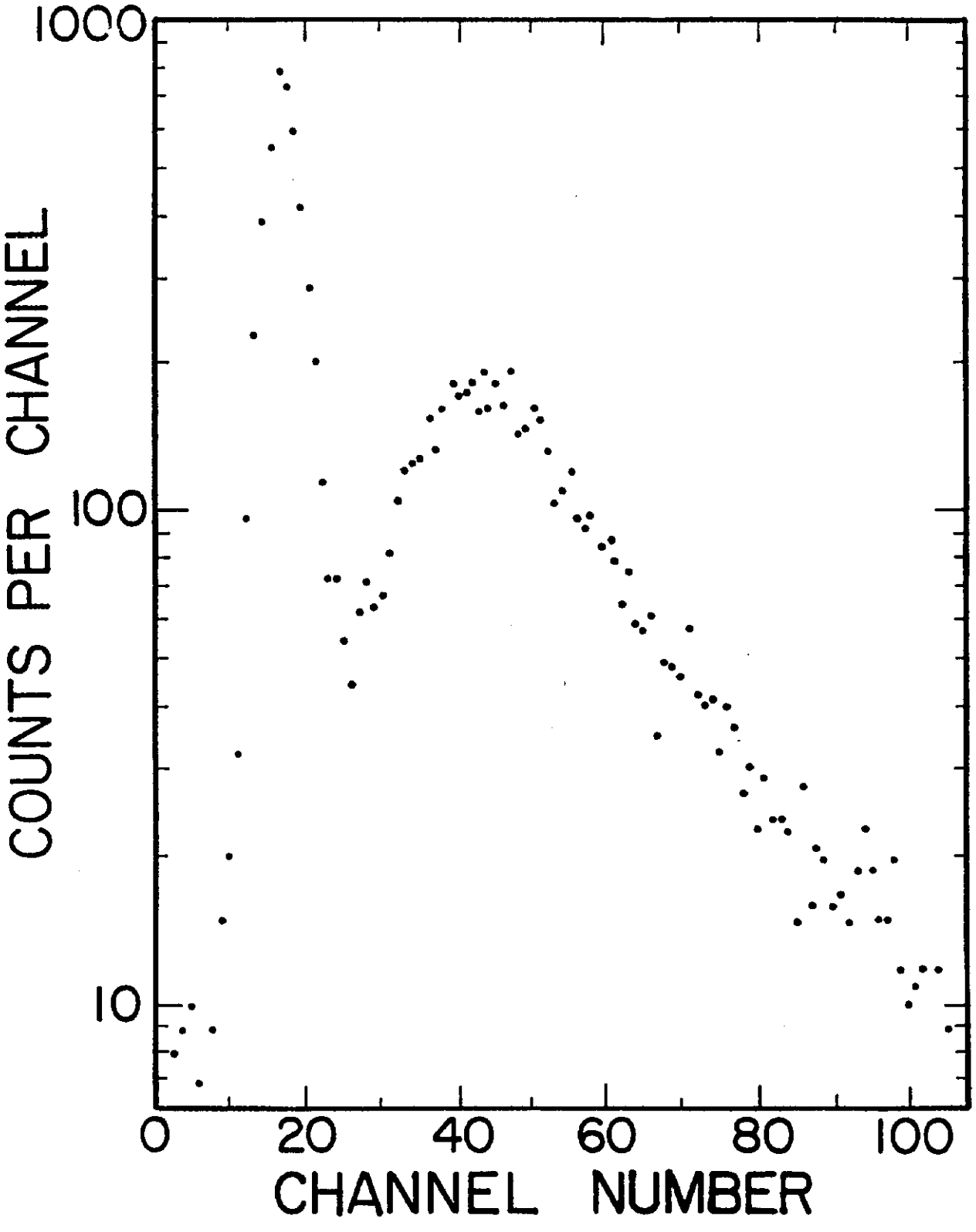

Figure 3. TYPICAL DATA

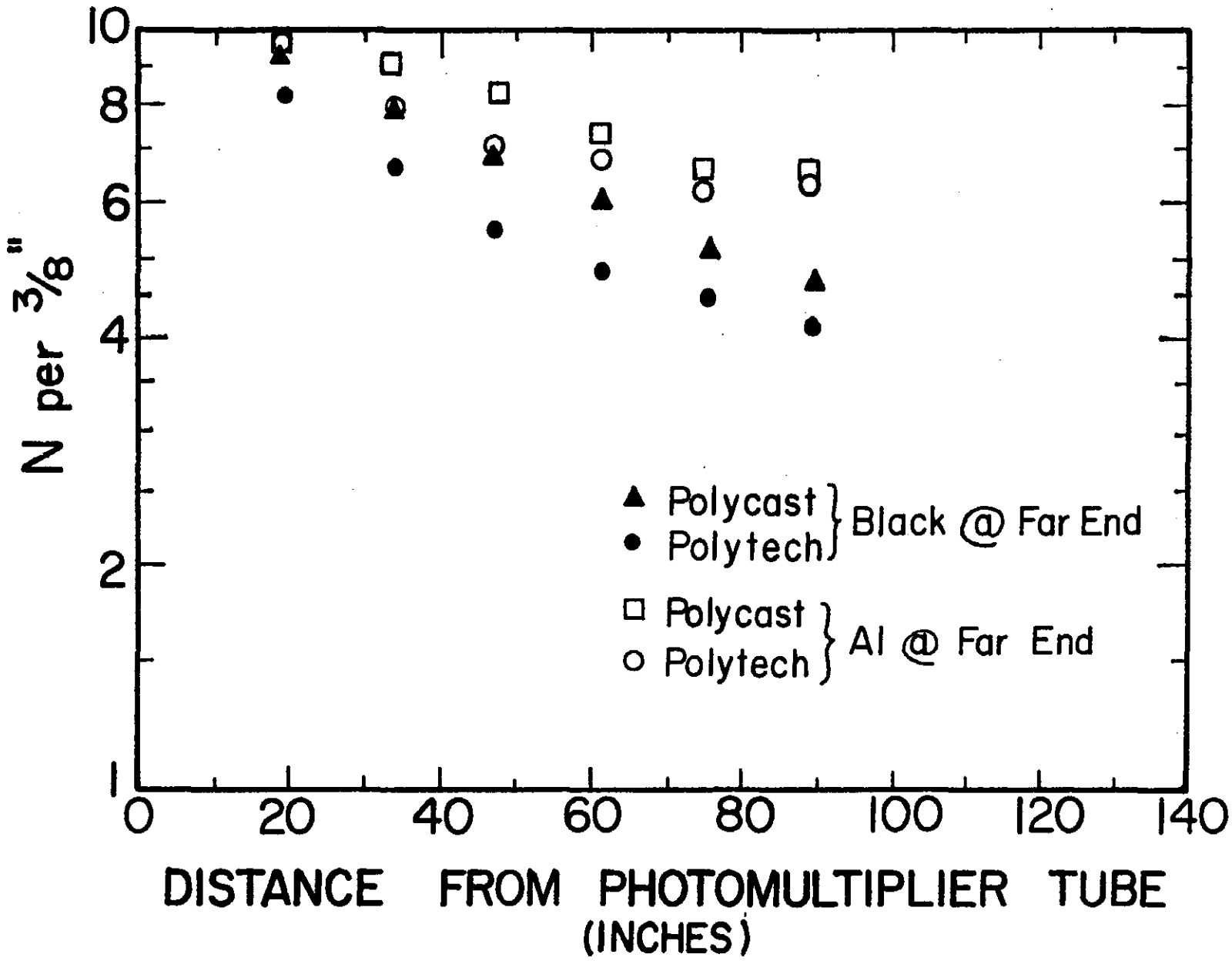

Figure 4a. ATTENUATION IN SCINTILLATOR

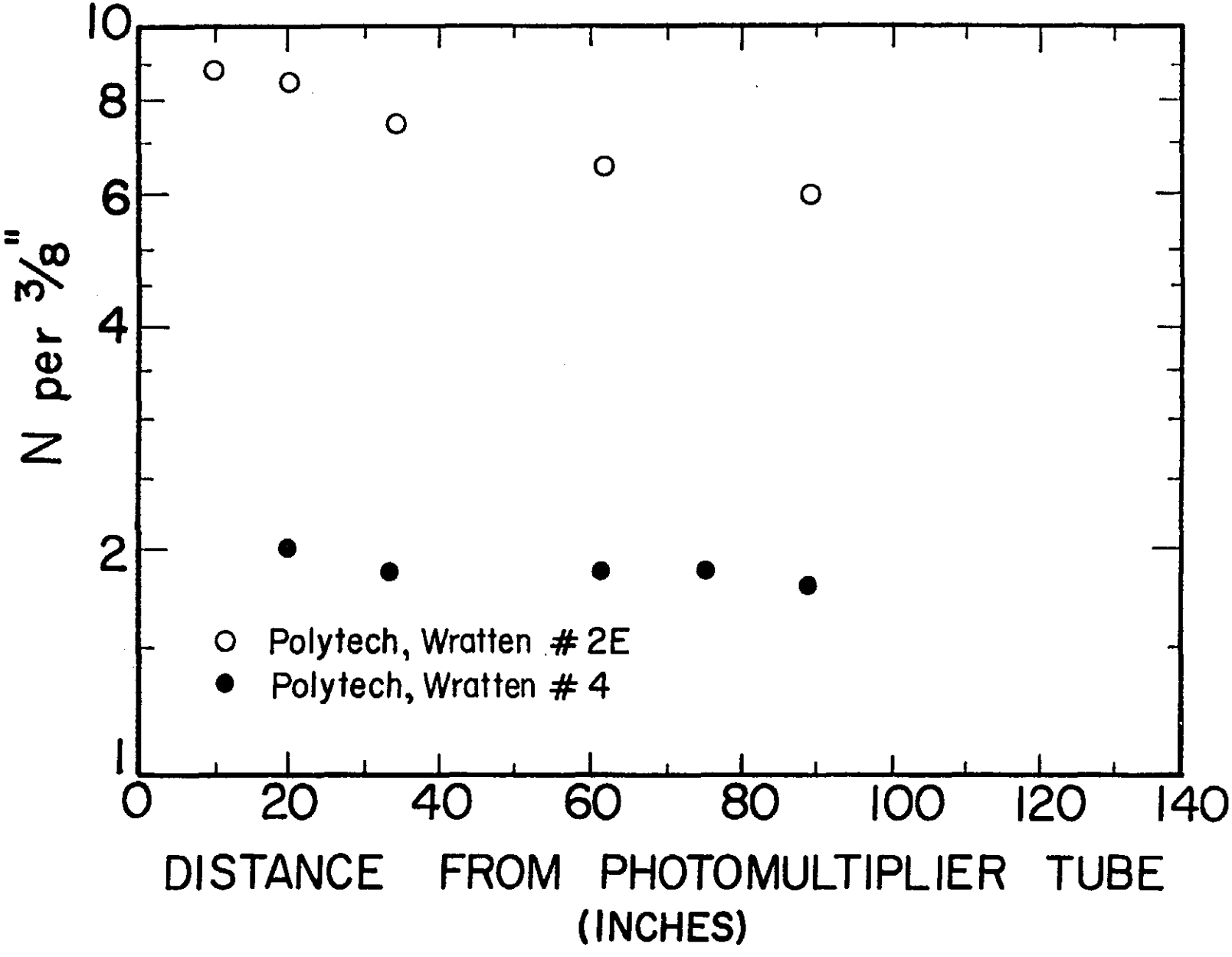

Figure 4b. ATTENUATION IN SCINTILLATOR

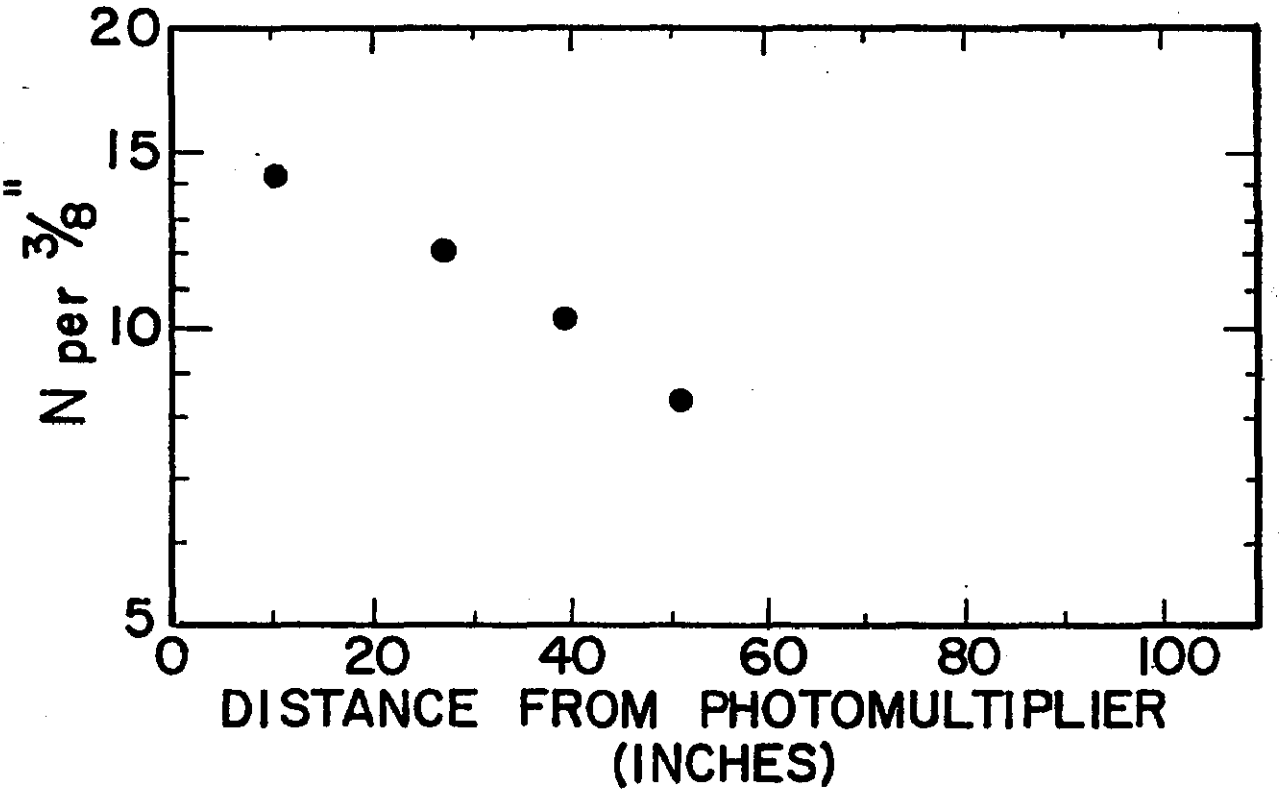

Figure 5. ATTENUATION IN WAVEBAR

FOOTNOTES

[1]W. Kienzle, G. Matthiae, R. Vanderhagen, S. Weisz, and S. Burgun, "Scintillator Developments at CERN", NP Internal Report 75-12, October 6, 1975.

[2]The attenuation length values are obtained by setting the mirror reflectivity = 1; a more realistic value is probably 0.9, for which all the values of λ must be increased by $\sim$ 10%.

[3]In other tests (not reported here), six inch wide samples from Polytech gave attenuation lengths of three meters for the shortest range and five meters for the longest range (with aluminum foil as a far end reflector). Kienzle, et al. were using samples approximately twice as thick as our and use an acrylic light guide.