national accelerator laboratory

FN-267
0100
November 1974

"DEPOLARIZATION" OF A POLARIZED PROTON BEAM IN A CIRCULAR ACCELERATOR

L.C. Teng

This effect has long been studied by many authors. Hence, we will only give a general review of the theory and offer a few handy formulas for quick estimates of the effect.

In the rest-frame (rotating) of the proton the classical spin ($\vec{s}$) equation is simply

$$\dot{\vec{s}} = \frac{ge}{2mc}\,\vec{s} \times \vec{B} \qquad (1)$$

where $\vec{B}$ is the magnetic field and $g = 5.58$ is the gyromagnetic ratio of the proton.

I. Several qualitative observations are interesting:

A. If the proton travels entirely in the midplane (no closed-orbit error and no vertical betatron oscillation) $\vec{B}$ is purely vertical. The spin $\vec{s}$ will simply precess about the vertical $\vec{B}$ and the vertical polarization will be conserved.

B. "Depolarization" is caused by a precession about a horizontal field component $\vec{B}_h$ which exists for protons with non-zero vertical oscillations or with nonvanishing closed-orbit errors. We shall consider here only "intrinsic" effects due to vertical oscillations. In this case, $\vec{B}_h$ is oscillatory with frequency components

$$\omega = (k \pm \nu + \gamma)\omega_o \qquad (2)$$

where k = integer, ν = vertical tune, ω_o = revolution frequency in the rest-frame. The term $k\omega_o$ arises from the magnet lattice structure, $\pm\nu\omega_o$ comes from the vertical oscillation, and $\gamma\omega_o$ corresponds to the Thomas precession term in the

rotating rest-frame. $\vec{B}_h$ may be analyzed into oppositely rotating components. Only the component which rotates in the same sense and at approximately the same angular speed as the vertical prescession of $\vec{s}$ can produce a large secular horizontal precession or "depolarization".

C. The frequency of precession about the vertical field component B_v is

$$\Omega \equiv \frac{geB_v}{2mc} = \frac{g\gamma}{2}\frac{eB_v}{m\gamma c} = \frac{g\gamma}{2}\omega_o. \tag{3}$$

As the proton is accelerated Ω sweeps across component frequencies of $\vec{B}_h$ and "depolarization" occurs. These resonances occur at $\Omega = \omega$ or

$$\frac{g-2}{2}\gamma = 1.79\gamma = k \pm \nu \qquad (k = \text{integer}). \tag{4}$$

They must be crossed rapidly to avoid sizable "depolarization".

D. Eq. (1) is identical to a rigid rotation with angular velocity $\frac{ge}{2mc}\vec{B}$. Thus, for a unique $\vec{B}$ the distribution of $\vec{s}$ is retained throughout the motion. If, before a resonance, the spins of all protons with the same amplitude and phase of vertical oscillation, hence same amplitude and phase of $\vec{B}_h$(hence, a unique $\vec{B}$) are distributed over a vertical cone C (Fig. 1) with semi-vertex angle θ_o (initial polarization $P_o = \cos\theta_o$), after crossing the resonance the spins must be distributed over a similar cone, say, C' which may be inclined from the vertical. Of course, cone C' must be presessing about the vertical (z) direction, thereby sweeping out a ring sector between two vertical cones with semi-vertex angles $\Delta\theta \pm \theta_o$. Because of the cylindrical symmetry $\Delta\theta$ must be independent of the phase of

$\vec{B}_h$ which gives only the zero-point of the azimuthal angle of $\vec{B}_h$ in the xy-plane. (x along direction of motion, y in radially outward normal direction). Hence for all phases but a unique amplitude of the vertical betatron oscillation the final polarization P_f is

$$P_f = \cos\theta_o \cos\Delta\theta = P_o \cos\Delta\theta \tag{5}$$

where $\Delta\theta$ depends only on the vertical amplitude. Therefore, for a given amplitude P_f will have a definite value between P_o and $-P_o$. The only "smearing" or true depolarization is caused by the spread of the vertical amplitudes in the beam.

E. Suppose we start with a beam having a spread of vertical amplitude but the same polarization P_o. After crossing a strong resonance, protons with zero amplitude will still have polarization P_o. Protons with some definite amplitude A_o will have $\Delta\theta = \frac{\pi}{2}$ and zero polarization; protons with amplitude $> 2A_o$ will have $\Delta\theta \sim \pi$ and polarization $\sim -P_o$. If, now, we slow-extract the beam by a scheme which extracts beam with various vertical amplitudes sequentially in time (such as a vertical resonant extraction system) protons with different polarizations between P_o and $-P_o$ will be sorted out in time during the spill. One has to make sure, however, that the polarization versus time distribution of the slow-spilled beam is not convoluted by the momentum spread in the beam or the extraction mechanism.

II. Solution of Equation (1)

A. To calculate $\Delta\theta$ across a given resonance, let us write (see Fig. 2 for the coordinates used)

$$\begin{cases} \vec{s} = \hat{i}\,\sin(\int\Omega dt+\phi) + \hat{j}\,\cos(\int\Omega dt+\phi)\,\sin\theta + k\,\cos\theta \\ \vec{B} = B_h(\hat{i}\,\cos\int\omega dt - \hat{j}\,\sin\int\omega dt) + B_v\,\hat{k} \end{cases} \tag{6}$$

where we have taken only the relevant rotating component of $\vec{B}_h$. Substituting Eq. (6) in Eq. (1) we get for the three components

$$\begin{cases} \dot{\theta}\,\sin(\int\Omega dt+\phi) + \dot{\phi}\,\tan\theta\,\cos(\int\Omega dt+\phi) = \Omega r\,\sin\int\omega dt \\ \dot{\theta}\,\cos(\int\Omega dt+\phi) - \dot{\phi}\,\tan\theta\,\sin(\int\Omega dt+\phi) = \Omega r\,\cos\int\omega dt \\ \dot{\theta} = \Omega r\,\cos[\int(\Omega-\omega)dt+\phi] \end{cases} \tag{7}$$

where $r \equiv B_h/B_v$ measures the "strength" of the resonance. Eqs. (7) are equivalent to the two equations

$$\begin{cases} \dot{\theta} = \Omega r\,\cos\left[\int(\Omega-\omega)dt+\phi\right] \\ \dot{\phi}\,\tan\theta = -\,\Omega r\,\sin\left[\int(\Omega-\omega)dt+\phi\right] \end{cases} \tag{8}$$

or the single complex equation

$$\frac{d}{dt}(\sin\theta\,e^{-i\phi}) = \Omega r\,\cos\theta\,e^{i\int(\Omega-\omega)dt}. \tag{9}$$

Note that $\sin\theta\,e^{-i\phi}$ is the projection of the spin on the equitorial plane referred to coordinates rotating with the vertical precession. When $r = 0$ both θ and ϕ are constants.

B. For a simple case we assume that in the neighborhood of the resonance

$$\begin{cases} \Omega-\omega = a^2 t \quad \text{where} \\ a^2 \equiv \frac{d}{dt}(\Omega-\omega) = \text{constant which measures the "speed" of crossing,} \end{cases} \tag{10}$$

and define

$$\tau \equiv at, \qquad K \equiv \frac{\Omega r}{a} . \tag{11}$$

Then Eq. (9) becomes

$$\frac{d}{d\tau}(\sin\theta\ e^{-i\phi}) = K \cos\theta\ e^{i\frac{\tau^2}{2}} . \tag{12}$$

This equation is difficult to integrate in general, but the quantity of interest, $\cos\Delta\theta$ ($\theta=0$ at $\tau=-\infty$, and $\theta=\Delta\theta$ at $\tau=+\infty$), can be obtained in closed form:

$$\cos\frac{\Delta\theta}{2} = e^{-\frac{\pi}{4}K^2} \qquad \text{or} \qquad \cos\Delta\theta = 2e^{-\frac{\pi}{2}K^2} - 1. \tag{13}$$

For $K = 0.664$ $\cos\Delta\theta = 0$ and the beam is totally "depolarized". For $K > 0.664$ $\cos\Delta\theta$ is negative and the polarization is flipped. To get $\cos\Delta\theta < -0.9$ we need $K > 1.381$.

C. We can estimate the order-of-magnitude of r for an azimuthally uniform gradient machine ($k=0$). In this case the horizontal field is purely radial; hence transverse to the motion, and identical in Lorentz transformation and in the additional Thomas precession term to the transverse vertical field. In the laboratory frame, in a quarter of a vertical oscillation the vertical angle turned is $\frac{A\nu}{R}$ where A = vertical amplitude and R = ring radius, and the horizontal turning angle around the ring is $\frac{\pi}{2\nu}$. Therefore, remembering that B_h is the amplitude of one rotating component, we have

$$r = \frac{B_h}{B_v} = \frac{1}{2}\left(\frac{\pi}{2}\ \frac{\text{vertical angle}}{\text{horizontal angle}}\right) = \frac{A\nu^2}{2R} . \tag{14}$$

In general we can write

$$r = \frac{A\nu^2}{2R}\ G_k \tag{15}$$

where G_k is a geometrical factor depending on the ring-magnet lattice. The quantity ν^2/R, hence the resonance strength r, is generally an order of magnitude larger for strong focusing machines than for weak focusing machines.

D. The quantum mechanical spin equation in the rest-frame

$$i\hbar\dot{\Psi} = -\vec{\mu}\cdot\vec{B}\Psi = -\frac{ge}{2mc}\frac{\hbar}{2}\vec{\sigma}\cdot\vec{B}\Psi \tag{16}$$

where $\vec{\mu}$ = magnetic moment of proton, $\vec{\sigma}$ = 2x2 spin matrices, and Ψ = 2-component spin state vector; has the solution

$$\Psi = \begin{pmatrix} e^{\frac{i}{2}(\int\Omega dt+\phi)}\cos\frac{\theta}{2} \\ ie^{-\frac{i}{2}(\int\Omega dt+\phi)}\sin\frac{\theta}{2} \end{pmatrix} e^{i\frac{\chi}{2}} \equiv \begin{pmatrix} \text{up} \\ \text{down} \end{pmatrix} \tag{17}$$

where

$$\dot{\chi}\cos\theta + \dot{\phi} = 0 \tag{18}$$

and θ and ϕ are given as before by Eq. (8) or Eq. (9). The polarization defined by

$$P \equiv \frac{|\text{up}|^2 - |\text{down}|^2}{|\text{up}|^2 + |\text{down}|^2} = \cos\theta \tag{19}$$

is identical to that given before. It is interesting to note that the irrelevant phase χ never appeared in the classical treatment.

III. ν-Jump Scheme

A. To avoid excessive "depolarization" one can use ν-jump quadrupoles to cross the resonance rapidly as was done successfully on the Argonne ZGS. Crossing a resonance more rapidly one

increases a (defined by Eq. (10)), hence reduces K (defined by Eq. (11)). From Eqs. (2) and (3) we get, with ν-jump

$$K = \frac{\Omega r}{\sqrt{\frac{d}{dt}(\Omega-\omega)}} = \frac{\frac{g}{2}\,\omega_o\,\gamma r}{\sqrt{\omega_o\,\frac{d}{dt}(\frac{g-2}{2}\gamma\mp\nu-k)}}$$

$$= \frac{\frac{g}{2}\,\omega_o\,\gamma r}{\sqrt{\frac{\omega_o^2}{2\pi}(\frac{g-2}{2}\,\frac{d\gamma}{dn}\mp\frac{d\nu}{dn})}} = \frac{2.79\,\sqrt{2\pi}\,\gamma r}{\sqrt{1.79\frac{d\gamma}{dn}\mp\frac{d\nu}{dn}}} \qquad (20)$$

where $\frac{d}{dn}$ denotes change per revolution. Eq. (20) gives the required direction ($\mp\frac{d\nu}{dn} > 0$) and speed ($\mp\frac{d\nu}{dn}$ should be large enough to reduce K, hence Δθ, to an acceptably small value.) of the ν-jump.

B. We can estimate the range Δν of the ν-jump required. From $\Omega-\omega = (1.79\dot{\gamma}\mp\dot{\nu})\omega_o t$ we get

$$\frac{\tau^2}{2} \equiv \int(\Omega-\omega)dt = (1.79\dot{\gamma}\mp\dot{\nu})\omega_o\frac{t^2}{2} = (1.79\dot{\gamma}\mp\dot{\nu})\omega_o\frac{(\delta\nu)^2}{2\dot{\nu}^2}$$

or

$$\delta\nu = \left[2\pi(1.79\frac{d\gamma}{dn}\mp\frac{d\nu}{dn})\right]^{-1/2}\frac{d\nu}{dn}|\tau|. \qquad (21)$$

The major contribution to Δθ comes from within $-2<\tau<2$. Thus, a total ν-jump range of

$$\Delta\nu = 2(\delta\nu \text{ with } |\tau|=2) = 4\frac{d\nu}{dn}\left[2\pi(1.79\frac{d\gamma}{dn}\mp\frac{d\nu}{dn})\right]^{-1/2} \qquad (22)$$

is adequate.

C. Now we analyze the strongest 8-ν (k=8) resonance of the ZGS.

("Acceleration of Polarized Protons to 8.5 GeV/c", T. Khoe et al, ANL Report, May 1974.) Without ν-jump ($\frac{d\nu}{dn} = 0$) an initial polarization of $P_o = 65\%$ is reduced to $P_f = 20\%$. This gives

$$\cos\Delta\theta = \frac{20}{65} = 0.308 \quad \text{and} \quad K = 0.520 \text{ (from Eq. (13))}.$$

Eqs. (20) and (15) then give

$$r = 0.783\text{x}10^{-4} \quad \text{and} \quad A = 0.776 \text{ cm}$$

where we used the parameters $\nu = 0.8$, $\gamma = 4.016$, $R = 27.4$ m, $\frac{d\gamma}{dn} = 10^{-5}$, and $G_8 = 0.864$* given in the reference mentioned above. This A value corresponds to an average vertical amplitude of ~ 1.0 inch at injection (50 MeV) as expected.

With ν-jump and for the fast crossing $\frac{d\nu}{dn} = 0.00119$ ($\Delta\nu = 0.04$ in 20 μsec or 33.7 revolutions). This gives

$$K = 0.0633 \quad \text{and} \quad \cos\Delta\theta = 0.987$$

showing essentially no "depolarization". The required range of the ν-jump is given by Eq. (22) to be

$$\Delta\nu = 0.055.$$

The applied range of $\Delta\nu = 0.04$ is a little too small but not unreasonably so.

---

*Two errors in the computation of G_8 in the reference were corrected.

(1) The Thomas precession term $-\frac{2}{g}(\gamma-1)\vec{B}_\perp$ where $\vec{B}_\perp$ is the transverse field component in the laboratory frame, must be added to give $\vec{B}$ in the rotating rest-frame.

(2) Across a straight section $B_v=0$ and there is no vertical precession. The contribution to B_h from the horizontal field components at the ends of a straight section must be treated specially.

When the ν-jump is timed early so that the resonance is crossed on the negative $\frac{d\nu}{dn}$ side, the crossing is slower and the "depolarization" is larger than without ν-jump, resulting in a maximum negative polarization of $P_f = -25\%$. This gives

$$\cos\Delta\theta = -\frac{25}{65} = -0.385,$$

$$K = 0.866,$$

and

$$\frac{d\nu}{dn} = -1.14\text{x}10^{-5}.$$

This is the maximum negative slope compared to an average slope of $\frac{d\nu}{dn} = -0.8\text{x}10^{-5}$ ($\Delta\nu = -0.04$ in ~ 3 msec or ~ 5000 revolutions). If the fall-time of the ν-jump quadrupoles can be shortened to give $\frac{d\nu}{dn}$ close to $-1.79\frac{d\gamma}{dn} = -1.79\text{x}10^{-5}$ one can obtain a total flip to give $P_f \cong -P_o = -65\%$.

Here, we studied only the "intrinsic" resonances due to vertical oscillations. The "error" resonances due to closed-orbit distortions are generally unimportant for weak focusing machines, but can be rather destructive for strong focusing machines. They must be eliminated (making $B_h = 0$, hence $r = K = 0$) by using correction dipoles.

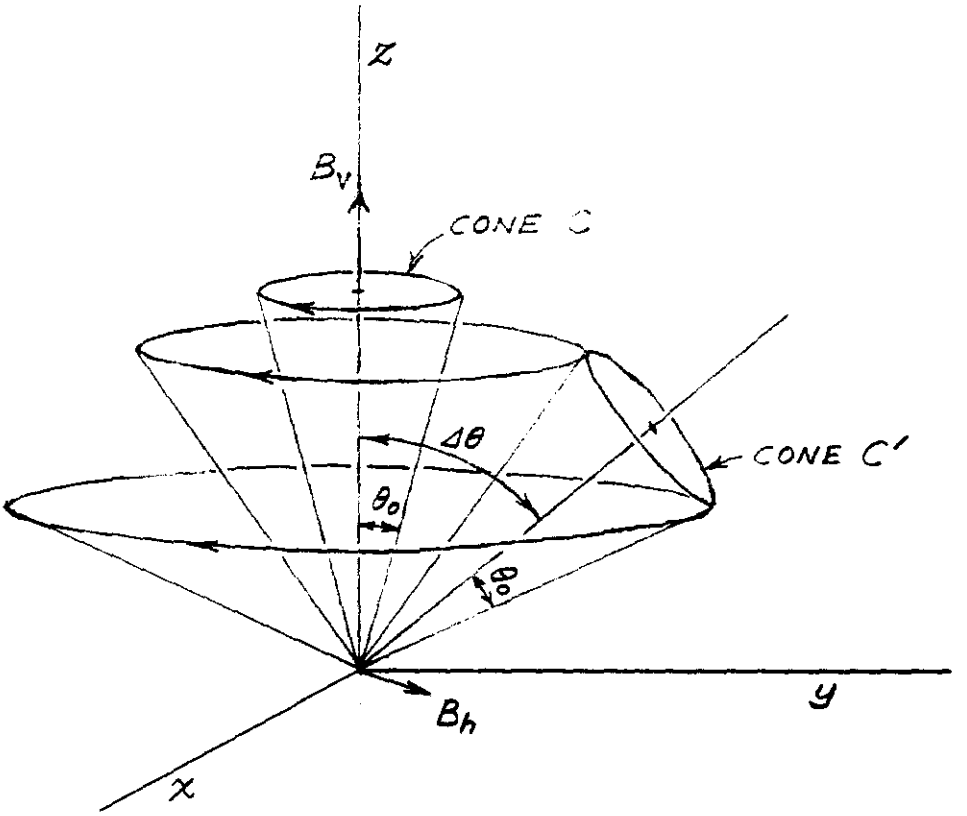

FIGURE 1 "DEPOLARIZATION" PROCESS

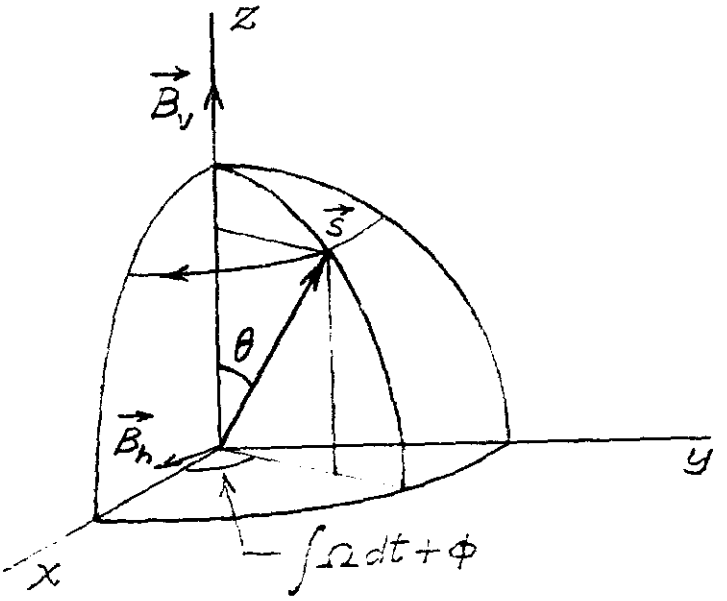

FIGURE 2 COORDINATES ADOPTED

national accelerator laboratory

FN-267-A
0100

"DEPOLARIZATION" OF A POLARIZED PROTON BEAM IN A CIRCULAR ACCELERATOR-Appendix

L.C. Teng

January 1975

Appendix Analytical Solution

The solution of the quantum mechanical equation can be expressed in terms of parabolic cylinder functions.

Substituting $\vec{B}$ from Eq. (6) in Eq. (16) we get

$$\begin{cases} i\dot{\alpha} = -\frac{\Omega}{2}\left(\alpha + r\beta e^{i\int\omega dt}\right) \\ i\dot{\beta} = -\frac{\Omega}{2}\left(-\beta + r\alpha e^{-i\int\omega dt}\right) \end{cases} \qquad \text{with } \Psi \equiv \begin{pmatrix} \alpha \\ \beta \end{pmatrix} . \tag{A-1}$$

Let

$$\begin{cases} \alpha = Ae^{\frac{i}{2}\int\omega dt} \\ \beta = Be^{-\frac{i}{2}\int\omega dt} \end{cases} \tag{A-2}$$

and we get

$$\begin{cases} \dot{A} = \frac{i}{2}[(\Omega-\omega)A + \Omega rB] \\ \dot{B} = \frac{i}{2}[-(\Omega-\omega)B + \Omega rA] . \end{cases} \tag{A-3}$$

For the simple case, after transformed by Eqs. (10) and (11) this becomes

$$\begin{cases} A' = \frac{i}{2}(\tau A + KB) \\ B' = \frac{i}{2}(KA - \tau B) \end{cases} \qquad \text{prime} = \frac{d}{d\tau} . \tag{A-4}$$

Operated by Universities Research Association Inc. Under Contract with the United States Atomic Energy Commission

Going to the uncoupled second order equations we get

$$\begin{cases} A'' + [\frac{1}{4}\tau^2 - (\frac{i}{2} - \frac{K^2}{4})]A = 0 \\ B'' + (\frac{1}{4}\tau^2 - (-\frac{i}{2} - \frac{K^2}{4})]B = 0 \quad . \end{cases} \tag{A-5}$$

These are in the standard forms of parabolic cylinder equations (see e.g. "Handbook of Mathematical Functions", National Bureau of Standards, 9th printing, 1970, p.p. 685-720). Take the A-equation

$$A'' + (\frac{1}{4}\tau^2 - \lambda)A = 0 \qquad \lambda = \frac{i}{2} - \frac{K^2}{4} \quad . \tag{A-6}$$

The two standard solutions are the parabolic cylinder functions

$$E(\lambda,\tau) \qquad \text{and} \qquad E^*(\lambda,\tau) \ .$$

We are interested in their asymptotic values. For $\tau^2 \to \infty$

$$E(\lambda,\tau) \to \sqrt{\frac{2}{\tau}}\, e^{i(\frac{1}{4}\tau^2 - \lambda \ln\tau + \frac{1}{2}\phi_2 + \frac{1}{4}\pi)}$$

where

$$\phi_2 = \arg\Gamma(\frac{1}{2} + i\lambda) = \arg\Gamma(-i\frac{K^2}{4}) \ .$$

With $\lambda = \frac{i}{2} - \frac{K^2}{4}$ we get at $\tau \to \infty$

$$\begin{cases} \lim\limits_{\tau\to\infty} E(\frac{i}{2} - \frac{K^2}{4}, \tau) \to \sqrt{\frac{2}{\tau}}\sqrt{\tau}\, e^{\frac{i}{4}(\tau^2 + K^2 \ln\tau + 2\phi_2 + \pi)} \\ \qquad\qquad = \sqrt{2}\, e^{\frac{i}{4}(\tau^2 + K^2 \ln\tau + 2\phi_2 + \pi)} \\ \lim\limits_{\tau\to-\infty} E^*(\frac{i}{2} - \frac{K^2}{4}, \tau) \to \sqrt{\frac{2}{\tau}}\frac{1}{\sqrt{\tau}}\, e^{-\frac{i}{4}(\tau^2 + K^2 \ln\tau + 2\phi_2 + \pi)} \to 0 \end{cases} \tag{A-7}$$

and at $\tau \to -\infty$

$$\begin{cases} \lim\limits_{\tau\to-\infty} E(\frac{i}{2} - \frac{K^2}{4}, \tau) \to \sqrt{2}\, e^{\frac{\pi}{4}K^2}\, e^{\frac{i}{4}(\tau^2 + K^2 \ln|\tau| + 2\phi_2 + \pi)} \\ \lim\limits_{\tau\to-\infty} E^*(\frac{i}{2} - \frac{K^2}{4}, \tau) \to 0 \end{cases} \tag{A-8}$$

Our initial condition is

$$|A| = \cos\frac{\theta}{2} = 1 \qquad \text{at} \qquad \tau = -\infty \ . \tag{A-9}$$

Hence the solution is

$$A(\tau) = \frac{1}{\sqrt{2}}\, e^{-\frac{\pi}{4}K^2}\, E(\frac{i}{2} - \frac{K^2}{4}, \tau) \ . \tag{A-10}$$

At $\tau = +\infty$ then

$$|A(+\infty)| \equiv \cos\frac{\Delta\theta}{2} = e^{-\frac{\pi}{4}K^2} \tag{A-11}$$

agreeing with Eq. (13).

It is interesting to note that in the quantum mechanical treatment the wave functions are given by linear equations which frequently have solutions expressible in terms of known functions. In the classical treatment one deals with the amplitudes of the wave functions, hence with more complex nonlinear equations.

national accelerator laboratory

FN-267-A
0100

"DEPOLARIZATION" OF A POLARIZED PROTON BEAM IN A CIRCULAR ACCELERATOR-Appendix

L.C. Teng

January 1975

Appendix Analytical Solution

The solution of the quantum mechanical equation can be expressed in terms of parabolic cylinder functions.

Substituting $\vec{B}$ from Eq. (6) in Eq. (16) we get

$$\begin{cases} i\dot{\alpha} = -\frac{\Omega}{2}\left(\alpha + r\beta e^{i\int\omega dt}\right) \\ i\dot{\beta} = -\frac{\Omega}{2}\left(-\beta + r\alpha e^{-i\int\omega dt}\right) \end{cases} \qquad \text{with } \Psi \equiv \begin{pmatrix} \alpha \\ \beta \end{pmatrix} . \tag{A-1}$$

Let

$$\begin{cases} \alpha = Ae^{\frac{i}{2}\int\omega dt} \\ \beta = Be^{-\frac{i}{2}\int\omega dt} \end{cases} \tag{A-2}$$

and we get

$$\begin{cases} \dot{A} = \frac{i}{2}[(\Omega-\omega)A + \Omega rB] \\ \dot{B} = \frac{i}{2}[-(\Omega-\omega)B + \Omega rA] . \end{cases} \tag{A-3}$$

For the simple case, after transformed by Eqs. (10) and (11) this becomes

$$\begin{cases} A' = \frac{i}{2}(\tau A + KB) \\ B' = \frac{i}{2}(KA - \tau B) \end{cases} \qquad \text{prime} = \frac{d}{d\tau} . \tag{A-4}$$

Operated by Universities Research Association Inc. Under Contract with the United States Atomic Energy Commission

Going to the uncoupled second order equations we get

$$\begin{cases} A'' + [\frac{1}{4}\tau^2 - (\frac{i}{2} - \frac{K^2}{4})]A = 0 \\ B'' + (\frac{1}{4}\tau^2 - (-\frac{i}{2} - \frac{K^2}{4})]B = 0 \quad . \end{cases} \tag{A-5}$$

These are in the standard forms of parabolic cylinder equations (see e.g. "Handbook of Mathematical Functions", National Bureau of Standards, 9th printing, 1970, p.p. 685-720). Take the A-equation

$$A'' + (\frac{1}{4}\tau^2 - \lambda)A = 0 \qquad \lambda = \frac{i}{2} - \frac{K^2}{4} \quad . \tag{A-6}$$

The two standard solutions are the parabolic cylinder functions

$$E(\lambda,\tau) \qquad \text{and} \qquad E^*(\lambda,\tau) \ .$$

We are interested in their asymptotic values. For $\tau^2 \to \infty$

$$E(\lambda,\tau) \to \sqrt{\frac{2}{\tau}}\, e^{i(\frac{1}{4}\tau^2 - \lambda \ln\tau + \frac{1}{2}\phi_2 + \frac{1}{4}\pi)}$$

where

$$\phi_2 = \arg\Gamma(\frac{1}{2} + i\lambda) = \arg\Gamma(-i\frac{K^2}{4}) \ .$$

With $\lambda = \frac{i}{2} - \frac{K^2}{4}$ we get at $\tau \to \infty$

$$\begin{cases} \lim\limits_{\tau\to\infty} E(\frac{i}{2} - \frac{K^2}{4}, \tau) \to \sqrt{\frac{2}{\tau}}\sqrt{\tau}\, e^{\frac{i}{4}(\tau^2 + K^2 \ln\tau + 2\phi_2 + \pi)} \\ \qquad\qquad = \sqrt{2}\, e^{\frac{i}{4}(\tau^2 + K^2 \ln\tau + 2\phi_2 + \pi)} \\ \lim\limits_{\tau\to-\infty} E^*(\frac{i}{2} - \frac{K^2}{4}, \tau) \to \sqrt{\frac{2}{\tau}}\frac{1}{\sqrt{\tau}}\, e^{-\frac{i}{4}(\tau^2 + K^2 \ln\tau + 2\phi_2 + \pi)} \to 0 \end{cases} \tag{A-7}$$

and at $\tau \to -\infty$

$$\begin{cases} \lim\limits_{\tau\to-\infty} E(\frac{i}{2} - \frac{K^2}{4}, \tau) \to \sqrt{2}\, e^{\frac{\pi}{4}K^2}\, e^{\frac{i}{4}(\tau^2 + K^2 \ln|\tau| + 2\phi_2 + \pi)} \\ \lim\limits_{\tau\to-\infty} E^*(\frac{i}{2} - \frac{K^2}{4}, \tau) \to 0 \end{cases} \tag{A-8}$$

Our initial condition is

$$|A| = \cos\frac{\theta}{2} = 1 \qquad \text{at} \qquad \tau = -\infty \ . \tag{A-9}$$

Hence the solution is

$$A(\tau) = \frac{1}{\sqrt{2}}\, e^{-\frac{\pi}{4}K^2}\, E(\frac{i}{2} - \frac{K^2}{4}, \tau) \ . \tag{A-10}$$

At $\tau = +\infty$ then

$$|A(+\infty)| \equiv \cos\frac{\Delta\theta}{2} = e^{-\frac{\pi}{4}K^2} \tag{A-11}$$

agreeing with Eq. (13).

It is interesting to note that in the quantum mechanical treatment the wave functions are given by linear equations which frequently have solutions expressible in terms of known functions. In the classical treatment one deals with the amplitudes of the wave functions, hence with more complex nonlinear equations.