national accelerator laboratory

Author	Section	Page
L. C. Teng	Theory	1 of 6
Date	**Category**	**Serial**
June 6, 1968	0423	FN-156

Subject PHILOSOPHY AND TECHNIQUE FOR DESIGN OF THE MAIN RING BENDING MAGNETS

Several two-dimensional magnet design computor programs, e.g. LINDA on CDC-6600 and TRIM on CDC-6600 and IBM-360 are available for computing the field in a magnet taking into account the current distribution and the saturation of the yoke iron. These programs will be used to design the bending magnets B1 and B2 of the main ring.

A. Low field considerations

By low field here we mean the range of field value over which saturation of the yoke iron is negligible and the permeability is sensibly infinity. For low field, therefore, the iron surface is an equipotential.

1. To produce a uniform field the boundary conditions are properly satisfied by a picture frame with coils placed as shown in Fig. 1. However for reasonable dimensions of the yoke this design gives very

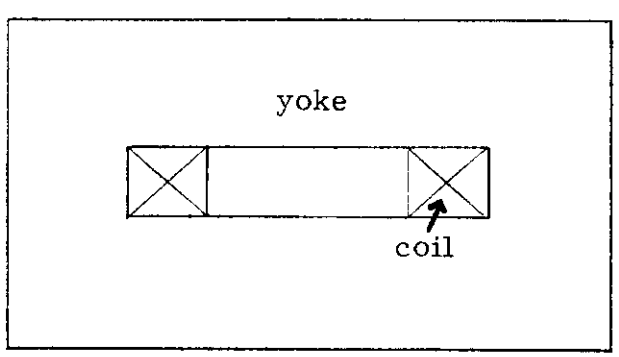

Fig. 1.

limited space for the coil, thereby requires very high current density in the coil and high power consumption. This consideration led to the addition of the coil windows (region II in Fig. 2).

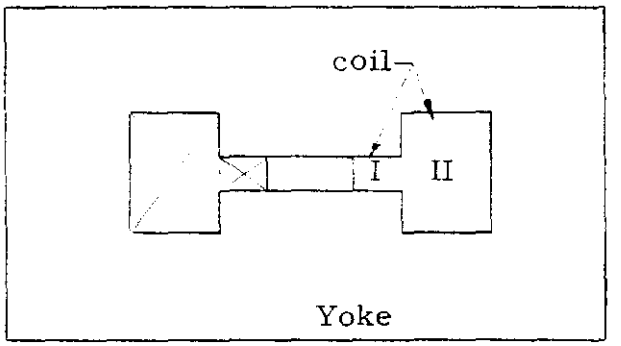

Fig. 2

2. Let us define $R \equiv \frac{(ni)_I}{(ni)_I + (ni)_{II}}$ = fraction of total ampere-turn in between poles, assuming uniform current densities within each of the regions I and II. For R = 1, namely all the current in region I, and for low field the boundary conditions corresponding to uniform field are still satisfied and we get a uniform field same as for the picture-frame design of Fig. 1. For R < 1 the field will not be uniform being lower near the coils. This drop in field toward the coil may be compensated by leaving gaps (of thickness δ, Fig. 3) between pole faces and the conductors. These ground gaps are needed anyway for

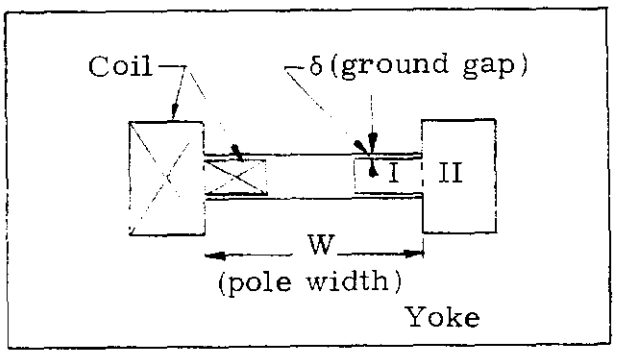

Fig. 3.

ground insulation of the coil and may be considered as negative currents producing a cancelling field which is higher in the middle than near the coils. For a given yoke geometry (specifically the pole width W) the field droop corresponding to different values of R will require different ground gap thickness δ to compensate. A set of R vs. δ curves will be computed for different values of W.

3. Although the compensation between the effects due to R and δ can in principle be accomplished at low field for any pole width W, too small a pole width will lead to unacceptable non-uniformities in field caused by yoke saturation at high fields. On the other hand, too large a pole width will result in an unnecessarily large amount of flux, hence excessively wide return yoke to carry the flux. As a rule of thumb, the poles should extend beyond the vacuum chamber by about one magnet gap at each side. This rule gives for the pole width of B1 5.0" + 1.5" + 1.5" = 8.0" and for that of B2 4.0" + 2.0" + 2.0" = 8.0". Thus, pole widths in the neighborhood of 8.0" will be investigated.

4. It may be necessary to introduce some turn-to-turn insulation on the midplane (Fig. 4). If we harmonic analyze the current distribution in the y-direction, because of symmetry, both the midplane gap current and the ground gap current contain harmonics $\cos n \pi \frac{y}{g}$ where g is the half magnet gap. The field distortion caused by the nth harmonic of the current goes like $e^{-\frac{n\pi}{g} x}$ where x is the distance along the midplane from the edge of the conductor. Since the 0th harmonic

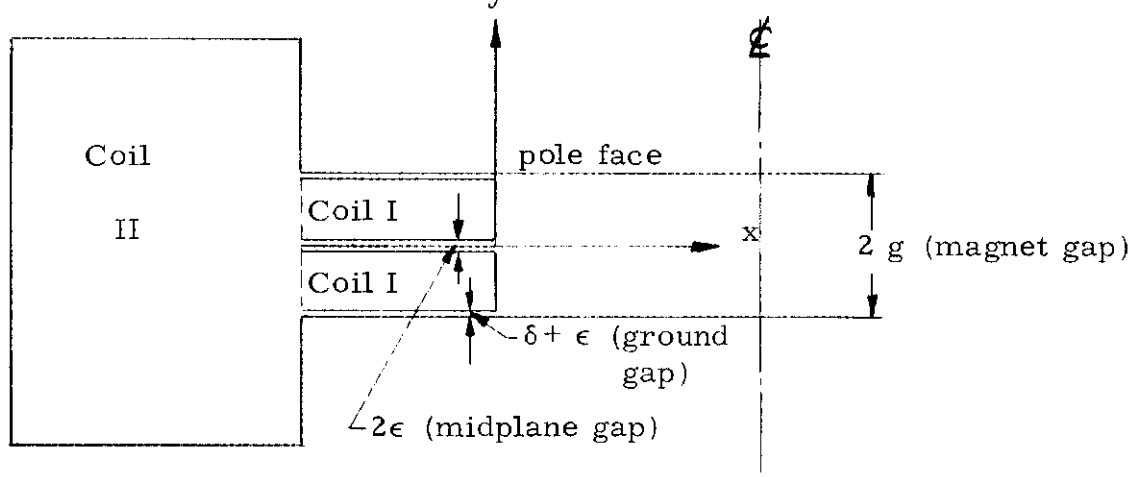

Fig. 4.

produces no field distortion and the effects of odd harmonic terms have opposite signs for the ground gaps and the midplane gap the best one can do to compensate for the field distortion due to the midplane gap (half thickness ϵ) is to increase the ground gaps by ϵ. This cancells the field distortion due to the first harmonic and reduces the $\frac{1}{e}$ range from $\frac{g}{\pi}$ to $\frac{g}{2\pi}$.

B. <u>High field considerations</u>

1. Although the high field behavior of a magnet can be adjusted to some extent by crenellation, crenellation always increases the reluctance hence the saturation of the magnet yoke. Therefore the magnets will be designed to produce satisfactory field shape to as high a field as possible without crenellation and crenellation will be used only for small extensions to the extreme high field.

2. For R = 1, saturation of the yoke at high field will cause the field to rise toward the coil and for low values of R the field will droop toward the coil. For given high field value and pole width there exist an optimum R (and a corresponding δ for compensation at low field) for which the field is closest to being uniform. As a standard high field value we choose 18 kG. For values higher than 18 kG the saturation is so large that when R is adjusted to be optimum for those fields, the field uniformity at intermediate values will not be acceptable. Sets of values R_{opt} and δ_{opt} will be obtained for various pole widths in the neighborhood of 8.0". One can then construct the R_{opt} and δ_{opt} curves as functions of the pole width W.

3. The choice of W will be based on the space available in between poles for accomodating the ampere-turns specified by the corresponding R_{opt}. This leads to the necessary current density in these conductors and hence the power and cooling requirements. In general one expects that R_{opt} will be smaller for wider pole, hence lower current density and less power and cooling required. On the other hand, smaller R_{opt} and wider pole lead to a larger amount of total flux. This will require bigger return yoke or, for the same yoke, result in higher saturation. The proper choice is a compromise of these two opposing requirements. Of course, we should try to design B1 and B2 to have approximately the same saturation characteristics. In addition the numerology dictated

by the numbers of turns in the coils for these two types of magnet must be taken into account.

4. Finally, to go beyond 18 kG we can introduce pole face crenellation. The effects of crenellation have been studied before. It should not be difficult to find the proper crenellation for a desired top field. However, as mentioned before, the crenellation should be kept small so as not to lead to excessive saturation of the yoke iron.