RHEL/R 265

RHEL/R 265
Rutherford Laboratory Report

NAL LIBRARY
MAY 16 1973

The Impregnation of Superconducting Windings with Epoxy Resins
Part 2 Resin Data

A J Middleton P D Hey B Colyer

Science Research Council

Department of Engineering Science
Rutherford High Energy Laboratory
Chilton Didcot Berkshire
1972

SBN 90237652 7

Available from HMSO
price 50p net

RHEL/R265

SCIENCE RESEARCH COUNCIL

THE IMPREGNATION OF SUPERCONDUCTING WINDINGS WITH EPOXY RESINS

Part 2 RESIN DATA

A J Middleton

P D Hey

B Colyer

ABSTRACT

Mechanical properties data are given for a number of epoxy resins which have been tested, both at room temperature and at liquid helium temperature, 4K.

Department of Engineering Science
Rutherford High Energy Laboratory
Chilton Didcot Berkshire

December 1972

CONTENTS

		Page
1.	Introduction	1
2.	Methods of Testing	2
3.	Conclusions	3
4.	Acknowledgements	4
5.	References	4
	Appendix I. Derivation of stress strain diagrams for non-linear materials from 4 point bend test data.	6
	Appendix II. Relation between fracture strengths measured by tension and bending.	8
	Appendix III. Conversion table.	9
	Tables	10
	Fig 1 Stress-strain curves at 4K	40
	Fig 2 Stress-strain curves at room temperature	41
	Fig 3 4-point bend test	42
	Fig 4 Bend test types	43

1 INTRODUCTION

This is the second part of a two-part report on materials for impregnating superconducting windings. The first part dealt with theory, this part contains data obtained at this laboratory during the past three and a half years.

Most of the information is presented in tabular form, this method being more concise than a large number of stress-strain diagrams; also, cross-reference is easier. Many of the stress strain curves are linear or nearly so; however, some are not, so the nature of the curve is stated in each case.

Some values are given to five significant figures. This is not intended to imply that the accuracy of measurement is of this order. The numbers are given as calculated, and the reader may perform his own rounding. It will be noticed in some cases that more than one set of values is given. Each set was obtained during a separate test, and the sets of values are quoted separately to give some idea of the spread of results likely to occur in this type of testing. It is regrettable that so few specimens of each material have been tested, but low-temperature testing is expensive and time-consuming. Perhaps further tests on a particular material may be combined with those included here and a statistical analysis performed.

Not all specimens were fractured during testing; this was particularly so under compression, since the maximum load applicable was limited by the machine and there is a minimum practical size of specimen which may conveniently be tested. When fracture did not occur we have stated the maximum stress (and the corresponding strain) which was attained, believing that any information is better than none for purposes of design.

Some values of work of fracture are given. The method of testing and results will be further discussed in a separate report.

The units used are those which were in common use here before the introduction of metrication. Conversion to SI units may be made with the aid of the tables in Appendix III.

Additional information on these materials has been reported by Evans et al.[1] Supply sources for the various materials are quoted in this reference.

2 METHODS OF TESTING

The discussion in Part 1 showed that certain properties of resins are important for comparison purposes. These are:

thermal contraction
tensile fracture strength
elastic modulus
work of fracture

To this list can be added:

Poisson's ration (or shear modulus)
toughness (area under stress-strain diagram)
strain at fracture
adhesive bond strength

We measure, or derive, all these, with the exceptions of Poisson's ratio (which may be expected to be similar for all resins, except perhaps, when heavily filled), and adhesive bond strength. In addition, designers are interested in compressive properties, since dipole and quadrupole windings are usually subjected to compressive stresses during operation. These, of course, modify the tensile stresses already existing as a result of differences in thermal contraction between resin and conductors.

A property which causes trouble, in the case of "rubbery" or "flexible" resins, is creep. We have not so far attempted to measure this; but the reader is warned that any resin with a low room temperature elastic modulus will probably suffer from creep.

Machines for obtaining the data given in this report have already been described by Middleton[2] and Ball[3]. The larger machine (10 tons capacity) is very rigid and has been adapted for work of fracture measurements.

We have a preference for 4-point bend tests for measuring strength and modulus. The specimens are simple and inexpensive. The constant bending moment over the central portion makes calculation of strain very easy, and it is simple to correct for non-linearity of stress-strain curves, see Appendix I. A recent description of the 4-point bend test has been given by Hammant[4]. In accordance with the theory of Weibull[5], bend tests yield higher fracture strength values, since the volume of highly stressed material is lower than in a tensile test. Some comparisons are made in Appendix II. One hopes that the volumes and thicknesses of resin layers in windings will be small, so that the bend tests may not give unduly optimistic numbers for fracture strengths. Weibull also indicates that, in brittle materials, a wide deviation in results is to be expected over a large number of samples. The mean fracture stress of a very small number of specimens of a given material may not be close to the true mean value, which he defines as the stress at which there is a 63% probability of failure, for unit volume of material.

In cases where the stress-strain curves are non-linear, we have given values of secant moduli, together with values of the strains corresponding with the intercepts.

Some stress-strain curves (corrected in accordance with Appendix I where necessary) are given in figures 1 and 2.

3 CONCLUSIONS

It is not easy to arrive at general conclusions, nor is it possible to recommend one particular resin system as the best. The designer must make his choice by considering his particular magnet.

Certain trends are apparent. The addition of particulate fillers is an excellent way of reducing thermal contraction and increasing modulus. It does not always increase the fracture strength, and since it reduces the fracture strain there is often a serious reduction in toughness: this does not occur, of course, with fibrous fillers. Excellent results can be got from flexible resins (eg number 6 in this report), but these resins are viscous, have short pot-lives, and tend to creep at room temperature. Creep may be reduced by adding fillers, but at the expense of toughness.

Present interest is in resins similar to number 22. This resin is not very tough or strong at room temperature, but its toughness, work of fracture and strength increase considerably at low temperature. It is reasonably fluid resin, curable at moderate temperatures (60°C), and has behaved well in windings, appearing to be substantially free from cracks.

The search is continuing.

4 ACKNOWLEDGEMENTS

Our first thanks must go to Mr R M Luckock; he has organized and performed most of the tests whose results are presented here. This has required an enormous amount of painstaking work. Thanks are due to the members of the Chemical Technology Section here for preparing samples.

5 REFERENCES

1. D Evans, J T Morgan and G B Stapleton. Rutherford Laboratory Report No RHEL/R251.
2. A J Middleton, Rutherford Laboratory Report No RHEL/R202.
3. M Ball. To be published.
4. B Hammant. Composites, 2 (4), 246 (1971).
5. W Weibull. Ingeniörs Vetenskaps Akademien, Proceedings 151, Stockholm 1939.
6. A Nadai. 'Theory of Flow and Fracture of Solids', 1, p353.

APPENDIX I. DERIVATION OF STRESS STRAIN DIAGRAMS FOR NON-LINEAR MATERIALS FROM 4 POINT BEND TEST DATA.

Consider a specimen of rectangular cross-section subjected to pure bending over its central portion, see fig. 3. We assume that the material has the same stress-strain curve for tension and compression, in which case Nadai[6] gives

$$\sigma = \frac{2}{bh^2}\left(2M + \phi\frac{dM}{d\phi}\right) \tag{1}$$

where σ = true surface stress

b = width of specimen

h = depth of specimen

M = bending moment

2ϕ = inclination with respect to each other of cross-sections spaced apart by the gauge length ℓ, over which the deflection is measured

ϕ is given exactly by

$$\phi = \sin^{-1}\left(\frac{2}{\ell/2\delta + 2\delta/\ell}\right) \tag{2}$$

where δ = deflection,

but, when $\delta \ll \ell$

$$\phi \simeq 4\delta/\ell \tag{3}$$

Strain at the surface is given by

$$\varepsilon = \frac{h\phi}{\ell} \simeq \frac{4h\delta}{\ell^2} \tag{4}$$

Now, (1) may be written

$$\sigma = \frac{6M}{bh^2}\left(\frac{4}{6} + \frac{1}{3M}\phi\frac{dM}{d\phi}\right) = \frac{\sigma'}{3}\left(2 + \frac{\phi}{M}\frac{dM}{d\phi}\right) \qquad (5)$$

where σ' = "fictitious" stress calculated by assuming that the material has a linear stress-strain curve,

ie $\sigma' = \frac{6M}{bh^2}$

Since $\sigma' = M \times$ constant

and $\varepsilon = \delta \times$ constant $= \phi \times$ constant

(5) can be written

$$\sigma = \frac{\sigma'}{3}\left(2 + \frac{\varepsilon}{\sigma'}\frac{d\sigma'}{d\varepsilon}\right) = \frac{2}{3}\sigma' + \frac{\varepsilon}{3}\frac{d\sigma'}{d\varepsilon} \qquad (6)$$

The secant modulus at a given strain ε is given by

$$E = \frac{\sigma}{\varepsilon} = \frac{2}{3}\frac{\sigma'}{\varepsilon} + \frac{1}{3}\frac{d\sigma'}{d\varepsilon}$$

(σ'/ε) is the "fictitious" secant modulus and $(d\sigma'/d\varepsilon)$ is the "fictitious" tangent modulus. In practice a curve of σ' versus ε is drawn through the data points, and the corrected curve obtained by a simple graphical method based on equation (6).

APPENDIX II. RELATION BETWEEN FRACTURE STRENGTHS MEASURED BY TENSION AND BENDING

Weibull[5] has applied his theory for the statistical nature of the strength of materials (which is very briefly discussed in Appendix IV of Part 1 of this report) to a consideration of the difference between fracture strengths measured by bend and tensile tests.

Assuming that the material function is of the type

$$n(\sigma) = k\sigma^m$$

where k and m are constants, and provided that the stressed volumes of bend and tensile specimens are the same, he gives

$$\frac{\sigma_b}{\sigma_t} = (2m+2)^{1/m}$$

where σ_b = strength in pure bending (ie obtained from a 4 point bend test if we assume that failure outside the central region is unlikely)

σ_t = strength in tension

Some values of this ratio are given below:

$m =$	1	2	3	5	7	10	∞
$\sigma_b/\sigma_t =$	4.0	2.45	2.0	1.64	1.49	1.36	1.0

Unfortunately, we do not yet know the appropriate values of m. One might expect m to lie between 3 and 10, in which case the bend test will give values which are too optimistic by a factor between 2 and 1.36. These ratios also tell us the relationship between specimen volumes for the same probability of failure at the same stress in bending and tension, eg when m = 3, a bend specimen and a tensile specimen of half the volume of the bend specimen will have the same probability of failure at the same stress.

APPENDIX III. CONVERSION TABLE

1) Stress, Modulus and Toughness*

Original Value a) in thousands of lbf/in^2 b) in millions of lbf/in^2	Values in SI units (a) MN/m^2 when original value is in thousands of lbf/in^2 (b) GN/m^2 when original value is in millions of lbf/in^2									
	.0	.1	.2	.3	.4	.5	.6	.7	.8	.9
0	0	0.69	1.38	2.07	2.76	3.45	4.14	4.83	5.52	6.20
1	6.89	7.58	8.27	8.96	9.65	10.34	11.03	11.72	12.41	13.10
2	13.79	14.48	15.17	15.86	16.55	17.24	17.92	18.61	19.30	19.99
3	20.68	21.37	22.06	22.75	23.44	24.13	24.82	25.51	26.20	26.89
4	27.58	28.27	28.95	29.64	30.33	31.02	31.71	32.40	33.09	33.78
5	34.47	35.16	35.85	36.54	37.23	37.92	38.61	39.30	39.99	40.67
6	41.36	42.05	42.74	43.43	44.12	44.81	45.50	46.19	46.88	47.57
7	48.26	48.95	49.64	50.33	51.02	51.71	52.39	53.08	53.77	54.46
8	55.15	55.84	56.53	57.22	57.91	58.60	59.29	59.98	60.67	61.36
9	62.05	62.74	63.42	64.11	64.80	65.49	66.18	66.87	67.56	68.25

2) Work of fracture

Multiply the number of $ergs/cm^2$ by 10^{-3} to obtain the value in J/m^2

*Original toughness values are in $lb.in/in^3$ (equivalent to lb/in^2). SI units will be in MJ/m^3 (equivalent to MN/m^2)

TABLES

Numbers in parentheses refer to notes as follows:

(1) Corrected value obtained by the method given in Appendix I.

(2) Average of two similar values.

(3) Non-linear initially, due to lack of perfect contact between specimen and test platens. This effect gradually disappears as stress is increased.

(4) Lower bound obtained from

1/2 (bend fracture stress x bend fracture strain). A more exact value could be measured from the corrected stress-strain diagram, but it was felt that the additional work involved would be unjustified.

Four different bend test configurations were used. They are illustrated in fig. 4.

NUMBER IN THIS REPORT	USUAL NAME OR REFERENCE NUMBER	RESIN DETAILS			THERMAL CONTRACTION	
		INGREDIENT	PARTS BY WEIGHT	CORE	$-\int_{77}^{291} \alpha \, dT$	$-\int_{4}^{291} \alpha \, dT$
1	FMNA 88	MY740 MNA DY062	100 88 1·75	1 HR. AT 100°C +4 HRS. AT 150°C	0·01060	0·01195
1a	FMNA 88 + SILICA	AS ABOVE + SILICA FLOUR	100	AS ABOVE		
1b	"	"	150	"	0·00670	
1c	"	"	200	"	0·00571	0·00643(2)
1d	"	"	275	"	0·00549	
1e	"	"	350	"	0·00494	0·00558
1f	"	"	400	"	0·00457	0·00523
1g	"	"	450	"	0·00461	0·00515
2	FMNA 65	MY740 MNA DY062	100 65 0·5		0·00963	0·01086
2a	FMNA 65 + SILICA	AS [2] + SILICA FLOUR	250			
2b	FMNA 65 +BALLOTINI	AS [2] + BALLOTINI<43μ			0·00379	0·00415
3	FMNA 80	MY740 MNA DY062	100 80 0·5	GEL AT 80°C +10 HRS. AT 120°C	0·00990	0·01141
3a	FMNA 80 +CARBON FIBRE	AS [3] + CARBON FIBRE		4 HRS. AT 150°C	0·00026	0·00025
3b	FMNA 80 +SINTOX	AS [3] + Al_2O_3 RUMBLINGS			0·00221	0·00234
3c	FMNA 80 +BALLOTINI	AS [3] + BALLOTINI<43μ		SLOWLY TO 150°C OVER 2 HRS. + 2 HRS. AT 150°C	0·00391	0·00432
3d 3e	"	WITH BALLOTINI 210-105μ		"	0·00361 0·00360	0·00403 0·00412
3f	"	WITH BALLOTINI 354-177μ			0·00365	0·00410
3g	"	WITH BALLOTINI 840-177μ			0·00357	0·00395
4	EPON/EMPOL	EPON 828 HY 964 EMPOL 1040 BDMA	100 134 26 1	2 HRS. AT 65°C +4 HRS. AT 149°C	0·01464	0·01638

TABLE 1

TOUGHNESS lb. in./in.^{3}		WORK OF FRACTURE erg./cm^2		REMARKS	NUMBER IN THIS REPORT
RT	4K	RT	4K		
					1
					1a
					1b 1c 1d 1e 1f 1g
18200 (4)	11000				2
	10200				2a
488	1850			ABOUT 76% BY WEIGHT OF BALLOTINI (SMALL GLASS SPHERES)	2b
26500	18270	1.0×10^5	7.2×10^4		3
17400 (4)	29700 (4)			ABOUT 60% BY VOLUME OF PARALLEL ROVINGS OF FIBRE	3a
				VIBRATED RUMBLINGS IMPREGNATED WITH RESIN	3b
1412 (4)	3062			ABOUT 77·4% BY WEIGHT OF BALLOTINI	3c
2720 (4) 3690 (4)	4170 4200 (4)			WITH DY062 WITH 1pbw DY063 IN PLACE OF DY062	3d 3e
2528 (4)	2477			WITH 1pbw DY063 IN PLACE OF DY062	3f
839 (4)	151			WITH 1pbw DY063 IN PLACE OF DY062	3g
10786 (4)	14569				4

TABLE 2

NUMBER IN THIS REPORT	BEND TEST. ROOM TEMPERATURE							
	SPECIMEN		MAX. OR FRACTURE VALUES			MODULUS VALUES		
	TYPE	WIDTH x DEPTH ins.	FAILED ?	STRESS lbf/in²	STRAIN %	LINEAR ?	E lbf / in²	STRAIN %
1								
1a								
1b 1c 1d 1e 1f 1g								
2	2		YES	12700 (1)	2·87	NO	$5·35 \times 10^5$	1·0
2a								
2b	1	0·544x0·124	YES	4879	0·20	YES	$2·36 \times 10^6$	
3		0·437x0·25	YES	16800 (10 TESTS)	3·16	NEARLY	$5·2 \times 10^5$	0·2
3a	1	0·399 x 0·125	YES	104800 (1)	0·33	NO	$3·34 \times 10^7$ (1)	0·2
3b								
3c	1	0·539 x 0·125	YES	7569 (1)	0·37	UP TO 0·2	$2·32 \times 10^6$	0·2
3d	2	0·535 x 0·128	YES	11850 (1)	0·46	NO	$3·16 \times 10^6$ (1)	0·2
3e	2	0·545 x 0·126	YES	13330 (1)	0·55	NO	$2·88 \times 10^6$	0·2
3f	2	0·542 x 0·127	YES	11211 (1)	0·45	NO	$2·86 \times 10^6$	0·2
3g	2	0·582 x 0·128	YES	6380 (1)	0·26	NEARLY	$2·50 \times 10^6$	0·2
4	2	0·521 x 0·120	NO	6235 (1)	3·46	NO	$3·15 \times 10^5$ (1)	1·0

TABLE 3

BEND TEST. 4K								NUMBER IN THIS REPORT
SPECIMEN		MAX. OR FRACTURE VALUES			MODULUS VALUES			
TYPE	WIDTH x DEPTH. ins.	FAILED ?	STRESS lbf/in²	STRAIN %	LINEAR ?	E lbf/in²	STRAIN %	
								1
								1a
								1b 1c 1d 1e 1f 1g
2	0·522x0·152	YES	15300	1·44	YES	$1·07 \times 10^6$		2
1	0·502 x 0·128	YES	21500	0·95	YES	$2·27 \times 10^6$		2a
1	0·519 x 0·124	YES	11933	0·31	YES	$3·25 \times 10^6$		2b
	0·250x0·162	YES	21000 (16 TESTS)	1·74	YES	$1·0 \times 10^6$		3
1	0·400 x 0·125	YES	131000	0·45	NO	$3·12 \times 10^7$ (1)	0·2	3a
								3b
1	0·517 x 0·125	YES	15157	0·40	YES	$3·77 \times 10^6$		3c
2	0·497 x 0·128	YES	18996	0·44	YES	$4·38 \times 10^6$		3d
2	0·543 x 0·126	YES	18880 (1)	0·44	NO	$4·5 \times 10^6$	0·2	3e
2	0·507 x 0·125	YES	14319	0·35	YES	$4·10 \times 10^6$		3f
2	0·565 x 0·127	YES	3394	0·09	YES	$3·83 \times 10^6$		3g
2	0·491 x 0·120	YES	17649	1·65	YES	$1·07 \times 10^6$		4

TABLE 4

NUMBER IN THIS REPORT	COMPRESSION TEST. ROOM TEMPERATURE							
	SPECIMEN		MAX. OR FRACTURE VALUES			MODULUS VALUES		
	LENGTH ins.	SECTION ins.	FAILED ?	STRESS lbf/in^2	STRAIN %	LINEAR ?	E lbf / in^2	STRAIN %
1								
1a	1·06	0·6 DIA.	NO	3536	0·60	YES (3)	$6·70 \times 10^5$	
1b 1c 1d 1e 1f 1g								
2								
2a								
2b	2·0	0·612 DIA.	NO	3399	0·22	YES (3)	$1·77 \times 10^6$	
3	2·0	0·611 DIA.	NO	3410	0·69	YES (3)	$5·24 \times 10^5$	
3a								
3b								
3c	1·98	0·605 DIA.	NO	3478	0·25	YES (3)	$1·52 \times 10^6$	
3d	1·02	0·607 DIA.	NO	3455	0·32	YES (3)	$1·22 \times 10^6$	
3e	1·04	0·606 DIA.	NO	3466	0·31	YES (3)	$1·37 \times 10^6$	
3f	0·99	0·612 DIA.	NO	3399	0·33	YES (3)	$1·16 \times 10^6$	
3g	1·05	0·616 DIA.	NO	3355	0·34	YES (3)	$1·10 \times 10^6$	
4	1·04	0·596 DIA.	NO	3584	0·14	YES (3)	$2·86 \times 10^5$	

TABLE 5

COMPRESSION TEST. 4K								NUMBER IN THIS REPORT
SPECIMEN		MAX. OR FRACTURE VALUES			MODULUS VALUES			
LENGTH ins.	SECTION ins.	FAILED ?	STRESS lbf/in²	STRAIN %	LINEAR ?	E lbf/in²	STRAIN %	
								1
1·03	0·598 DIA.	NO	3560	0·41	YES (3)	$9·45 \times 10^5$		1a
								1b 1c 1d 1e 1f 1g
								2
								2a
2·0	0·613 DIA.	NO	3387	0·17	YES (3)	$2·11 \times 10^6$		2b
								3
								3a
1·05	0·609 DIA.	NO	3433	0·38	YES (3)	$1·41 \times 10^6$		3b
2·0	0·605 DIA.	NO	3478	0·17	YES (3)	$2·27 \times 10^6$		3c
1·03 1·06	0·605 DIA. 0·607 DIA.	NO NO	3478 3455	0·26 0·23	YES (3) YES (3)	$1·50 \times 10^6$ $1·60 \times 10^6$		3d 3e
2·03 1·0	0·609 DIA. 0·611 DIA.	NO NO	3433 3410	0·16 0·28	YES (3) YES (3)	$2·24 \times 10^6$ $1·43 \times 10^6$		3f
1·02	0·618 DIA.	NO	3333	0·26	YES (3)	$1·45 \times 10^6$		3g
1·05	0·595 DIA.	NO	3596	0·58	YES (3)	$7·0 \times 10^5$		4

TABLE 6

NUMBER IN THIS REPORT	USUAL NAME OR REFERENCE NUMBER	RESIN DETAILS			THERMAL CONTRACTION	
		INGREDIENT	PARTS BY WEIGHT	CORE	$-\int_{77}^{291} \alpha \, dT$	$-\int_{4}^{291} \alpha \, dT$
5a	EPON / DSA / EMPOL	828 DSA	100 115·9		0·01435	0·01594
5b		1040 BDMA	20 1		0·01405	0·01581
6	4A	ADIPRENE L100 828	50 35	2 HRS. AT 100°C +3 HRS. AT 140° C		
6a		871 MOCA	15 27·5	5 HRS. AT 140° C	0·01517	0·01644
6b	4A	DER 332 IN PLACE OF 828		5 HRS. AT 141°C	0·01413	0·01546
6c	4A + SILICA	AS [6] + SILICA FLOUR	 100	2 HRS. AT 100°C +3 HRS. AT 140° C	0·00989	0·01081
6d	4A + SILICA	"	200	"	0·00802	0·00873
6e	4A + SINTOX	AS[6]+Al_2O_3			0·00320	0·00345
6f		RUMBLINGS			0·00269	0·00330
7	ADIPRENE 50/50/30	L100 828 MOCA	50 50 30			
8	ADIPRENE 70/30/20	L100	70	2 HRS. AT 100°C+ 5 HRS. AT 140°C	0·01652	0·01785
8a		MY740 MOCA	30 20	5 HRS. AT 140°C	0·01640	0·01775
8b	"	DER 332 IN PLACE OF MY740		5 HRS. AT 141°C	0·01833 (2)	0·01959 (2)
8c	ADIPRENE 70/30/20 + SILICA	AS [8] + SILICA FLOUR	 100	2 HRS. AT 100°C+ 3 HRS. AT 140°C		
8d	ADIPRENE 70/30/20 + BGE	AS [8] + BGE	 4	5 HRS. AT 140°C	0·01848	0·01978
9	ADIPRENE 70/30/17·5	L100 MY753 MOCA	70 30 17·5	5 HRS. AT 140°C	0·01985	0·02119
10	ADIPRENE 70/36·2/19·2	L100 MY753 MOCA	70 36·2 19·2	5 HRS. AT 140°C	0·01866	0·02004
11	ADIPRENE 70/21/9/17·8	L100 828 871 MOCA	70 21 9 17·8	5 HRS. AT 140°C	0·01897	0·02029

TABLE 7

TOUGHNESS lb. in./in.^{3}		WORK OF FRACTURE erg./cm.^{2}		REMARKS	NUMBER IN THIS REPORT
RT	4K	RT	4K		
				828 AND 1040 MIXED AT 100°C, COOLED TO RT, DSA AND BDMA ADDED MIXED AT ROOM TEMPERATURE	5a 5b
	19350 14450(4) 30630		9·0 x 10^5	POT LIFE ~ 1 HR.	6 6a
	27900 (4)				6b
	6770 (4)			POT LIFE ~ 1 HR	6c
	8400(4)				6d
				RUMBLINGS 0·055" – 0·066" RUMBLINGS 0·139" – 0·156"	6e 6f
	10490				7
	26590 14700 25000(4) 11300(4)			POT LIFE ~ ½ HR.	8 8a
	17990				8b
	7681			POT LIFE ~ ½ HR.	8c
					8d
					9
					10
					11

TABLE 8

NUMBER IN THIS REPORT	BEND TEST. ROOM TEMPERATURE							
	SPECIMEN		MAX. OR FRACTURE VALUES			MODULUS VALUES		
	TYPE	WIDTH x DEPTH ins.	FAILED ?	STRESS lbf/in²	STRAIN %	LINEAR ?	E lbf/in²	STRAIN %
5a								
5b								
6								
6a	1	0·530x0·297	NO	1091 (1)	3·99	NO	37250	1·0
6b								
6c	1	0·527 x 0·252	NO	UNRELIABLE	0·35	NO	38740	1·0
6d	1	0·506 x 0·251	NO	2610 (1)	3·20	NO	$1·26 \times 10^5$	1·0
6e								
6f								
7	1	0·510 x 0·234	NO	6890 (1)	3·32	NO	$2·79 \times 10^5$	1·0
8								
8a	1	0·502x0·344	NO	687	5·53	NO	14160	1·0
8b								
8c								
8d								
9								
10								
11								

TABLE 9

BEND TEST. 4K								NUMBER IN THIS REPORT
SPECIMEN		MAX. OR FRACTURE VALUES			MODULUS VALUES			
TYPE	WIDTH x DEPTH ins.	FAILED ?	STRESS lbf/in²	STRAIN %	LINEAR ?	E lbf/in²	STRAIN %	
								5a 5b
1	0·511 x 0·246	YES	21997	1·76	YES	$1·26 \times 10^6$		6
1 4	0·540 x 0·285 1·002 x 0·504	YES YES	19400 (1) 27722	1·49 2·21	NO YES	$1·40 \times 10^6$ $1·30 \times 10^6$	0·2	6a
1	0·506 x 0·316	NO	27000 (1)	2·07	FAIRLY	1.32×10^6	1·0	6b
1	0·518 x 0·259	YES	18000 (1)	0·75	NEARLY	$2·44 \times 10^6$	0·2	6c
1	0·516 x 0·255	YES	24320 (1)	0·69	NO	$3·92 \times 10^6$	0·2	6d
								6e 6f
1	0·521 x 0·216	YES	16790	1·25	YES	$1·21 \times 10^6$		7
1 1 1 1	0·517 x 0·216 0·542 x 0·341 0·537x 0·160 0·535x0·355	YES YES YES NO	25692 20291 23600 (1) 17800 (1)	2·07 1·45 2·12 1·27	YES YES NO NEARLY	$1·26 \times 10^6$ $1·38 \times 10^6$ $1·26 \times 10^6$ $1·45 \times 10^6$	 1·0 1·0	8 8a
1	0·533x0·306	YES	21808	1·65	YES	$1·31 \times 10^6$		8b
1	0·537 x 0·203	YES	18443	0·83	YES	$2·22 \times 10^6$		8c
								8d
								9
								10
								11

TABLE 10

NUMBER IN THIS REPORT	COMPRESSION TEST. ROOM TEMPERATURE							
	SPECIMEN		MAX. OR FRACTURE VALUES			MODULUS VALUES		
	LENGTH ins.	SECTION ins.	FAILED ?	STRESS lbf/in²	STRAIN %	LINEAR ?	E lbf/in²	STRAIN %
5a								
5b								
6								
6a	2·0	0·597 DIA.	NO	1785	4·82	NO	$4·3 \times 10^4$	1·0
6b	2·0	0·596 DIA.	NO	1791	6·2	NO	$4·6 \times 10^4$	1·0
6c								
6d	2·0	0·625 DIA.	YES	10221	3·91	NO	$5·45 \times 10^5$	1·0
6e 6f	2·0	0·625 DIA.	YES	8031	2·06	NO	$5·84 \times 10^5$	1·0
7								
8								
8a								
8b	2·0	0·609 DIA.	NO	617	8·29	NEARLY	8350	1·0
8c								
8d								
9								
10								
11								

TABLE 11

COMPRESSION TEST 4K								NUMBER IN THIS REPORT
SPECIMEN		MAX. OR FRACTURE VALUES			MODULUS VALUES			
LENGTH ins.	SECTION ins.	FAILED ?	STRESS lbf/in²	STRAIN %	LINEAR ?	E lbf/in²	STRAIN %	
								5a 5b
2·0	0·597 DIA.	NO	3571	0·39	YES	$9{\cdot}83 \times 10^5$		6 6a
2·0	0·599 DIA.	NO	3548	0·42	YES	$8{\cdot}5 \times 10^5$		6b
								6c
2·0	0·625 DIA.	NO	35775	0·27	NO	$1{\cdot}33 \times 10^7$		6d
								6e 6f
								7
								8 8a
2·0	0·610 DIA.	NO	3420	0·43	YES	$7{\cdot}50 \times 10^5$		8b
								8c
								8d
								9
								10
								11

TABLE 12

NUMBER IN THIS REPORT	USUAL NAME OR REFERENCE NUMBER	RESIN DETAILS			THERMAL CONTRACTION	
		INGREDIENT	PARTS BY WEIGHT	CORE	$-\int_{77}^{291} \alpha \, dT$	$-\int_{4}^{291} \alpha \, dT$
12	MY740/MS 2000	MY740 MS 2000	100 200	2 HRS. AT 100°C +2 HRS. AT 140°C	0·01611	0·01785
12a	MY740/MS 2000 + BALLOTINI	AS [12] + BALLOTINI < 43μ		"	0·00508	0·00564
12b	MY740/MS 2000 + SILICA	AS [12] + SILICA FLOUR		"	0·00878	0·00960
13	41	MY740 CY 208 MNA	30 70 52	10 HRS. AT 100°C +5 HRS. AT 150°C	0·01099	0·01252
13a	41 + BALLOTINI	AS [13] + BALLOTINI		"	0·00399	0·00442
13b	41 + SINTOX	AS [13] + SINTOX			0·00243 0·00182	0·00253 0·00177
14	42	L100 CY208 MY740 MOCA	50 30 20 17	10 HRS. AT 100°C +5 HRS. AT 150°C	0·01607	0·01743
15		CY208 MY740 MNA DY063	75 25 62·5 2	10 HRS. AT 125°C	0·01134	0·01287
16		CY208 MY750 MY905 DY061	50 50 75 0·1	10 HRS. AT 125°C	0·01057	0·01246
17	43	L100 MY740 871 MOCA	50 30 25 25	10 HRS. AT 100°C +5 HRS. AT 150°C	0·01651 (2)	0·01782 (2)
17a	43 + BALLOTINI	AS [17] + BALLOTINI		"	0·00549	0·00583
18	43H	L100 MY740 871 MOCA	50 30 20 25	5 HRS. AT 140°C	0·01679	0·01789
18a	43H + SINTOX	AS [18] + SINTOX		"	0·00360 0·00320	0·00388 0·00340

TABLE 13

TOUGHNESS lb. in/in³		WORK OF FRACTURE erg/cm²		REMARKS	NUMBER IN THIS REPORT
RT	4K	RT	4K		
					12
				ABOUT 75% BY WEIGHT OF BALLOTINI	12a
					12b
					13
				PROPORTION OF BALLOTINI NOT KNOWN, PROBABLY ~ 75% BY WEIGHT	13a
				RUMBLINGS 0·055"– 0·066" RUMBLINGS 0·139"– 0·156"	13b
					14
					15
					16
					17
				PROPORTION OF BALLOTINI NOT KNOWN, PROBABLY ~ 75% BY WEIGHT	17a
	11470				18
				RUMBLINGS 0·055"– 0·066" RUMBLINGS 0·132"– 0·156"	18a

TABLE 14

NUMBER IN THIS REPORT	BEND TEST. ROOM TEMPERATURE							
	SPECIMEN		MAX. OR FRACTURE VALUES			MODULUS VALUES		
	TYPE	WIDTH x DEPTH ins.	FAILED ?	STRESS lbf/in²	STRAIN %	LINEAR ?	E lbf/in²	STRAIN %
12								
12a								
12b								
13								
13a								
13b								
14								
15								
16								
17								
17a								
18								
18a								

TABLE 15

BEND TEST. 4K								NUMBER IN THIS REPORT
SPECIMEN		MAX. OR FRACTURE VALUES			MODULUS VALUES			
TYPE	WIDTH x DEPTH ins.	FAILED ?	STRESS lbf/in^2	STRAIN %	LINEAR ?	E lbf/in^2	STRAIN %	
								12
								12a
								12b
								13
								13a
								13b
								14
								15
								16
								17
								17a
4	0·973x0·609	YES	15600	1·47	YES	$1{\cdot}10 \times 10^6$		18
								18a

TABLE 16

NUMBER IN THIS REPORT	COMPRESSION TEST. ROOM TEMPERATURE							
	SPECIMEN		MAX. OR FRACTURE VALUES			MODULUS VALUES		
	LENGTH ins.	SECTION ins.	FAILED ?	STRESS lbf/in^2	STRAIN %	LINEAR ?	E lbf/in^2	STRAIN %
12								
12a								
12b								
13	1·98	0·592 DIA.	NO	1453	0·41	YES (3)	$3·78 \times 10^5$	
13a	2·03	0·605 DIA.	NO	1739	0·13	YES (3)	$1·61 \times 10^6$	
13b								
14	2·0	0·6 DIA.	NO	70	8·5	NO	$2·0 \times 10^3$	1·0
15								
16								
17	2·0 2·0	0·585 DIA. 0·6 DIA.	NO NO	446 353	3·91 7·11	NO YES (3)	$1·72 \times 10^4$ $4·2 \times 10^3$	1·0
17a								
18	2·0	0·587 DIA.	NO	314	4·99	NO	$1·10 \times 10^4$	1·0
18a	2·0 2·0	0·616 DIA. 0·597 DIA.	NO NO	3355 3572	2·02 2·55	NO NO	$2·24 \times 10^5$ $1·50 \times 10^5$	1·0 1·0

TABLE 17

COMPRESSION TEST 4K								NUMBER IN THIS REPORT
SPECIMEN		MAX. OR FRACTURE VALUES			MODULUS VALUES			
LENGTH ins.	SECTION ins.	FAILED ?	STRESS lbf/in^2	STRAIN %	LINEAR ?	E lbf/in^2	STRAIN %	
								12
								12a
								12b
1·98	0·592 DIA.	NO	3633	0·52	YES (3)	$7{\cdot}62 \times 10^5$		13
2·03	0·605 DIA.	NO	3478	0·16	YES (3)	$2{\cdot}69 \times 10^6$		13a
								13b
2·0	0·6 DIA.	NO	3536	0·68	YES (3)	$5{\cdot}95 \times 10^5$		14
								15
								16
2·0 2·0	0·583 DIA. 0·601 DIA.	NO NO	3746 3524	0·38 0·41	YES (3) YES (3)	$1{\cdot}07 \times 10^6$ $9{\cdot}30 \times 10^5$		17
								17a
2·0 2·0	0·587 DIA. 0·502 x 0·500	NO NO	3695 36055	0·37	YES (3) YES	$1{\cdot}07 \times 10^6$ $9{\cdot}0 \times 10^5$		18
2·0	0·625 DIA.	YES	26000	0·37	FAIRLY	$7{\cdot}05 \times 10^6$		18a

TABLE 18

NUMBER IN THIS REPORT	USUAL NAME OR REFERENCE NUMBER	RESIN DETAILS			THERMAL CONTRACTION	
		INGREDIENT	PARTS BY WEIGHT	CORE	$-\int_{77}^{291} \alpha dT$	$-\int_{4}^{291} \alpha dT$
19	45	L100 828 871 MOCA PGE	50 35 15 29·6 10	5 HRS. AT 140°C	0·01481	0·01634
19a	45 +BALLOTINI	AS [19] + BALLOTINI		"	0·00499	0·00542
20	50	CY208 MNA BDMA	100 37 1	15 HRS. AT 100°C +5 HRS. AT 150°C	0·01536	0·01690
20a	50+SINTOX	AS [20] + SINTOX		"	0·00298	0·00326
21	66	MY790 T403 D1000	100 27 33	16 HRS. AT 85°C	0·01125	0·01255
22	53	MY740 D230	100 44	16 HRS. AT 60°C	0·00985 (2)	0·01092 (2)
23	71	MY740 POPDA 400 CYCLOHEXYL DIAMENE	100 57 10	16 HRS. AT 60°C	0·01130	0·01205
24	EPIKOTE / DDM/ Al_2O_3	EPIKOTE 828 DDM BF3 Al_2O_3 POWDER	100 7 3 55		0·00558	0·00638
25	STYCAST 2850 GT			2 HRS. AT 100°C	0·00375	0·00404
26	STYCAST 2850 FT			"	0·00400	0·00444
27	ECCOBOND 285			"	0·00419	0·00472
28	146	MY740 D230 ZIRCOSIL	100 44 600	12 HRS. AT 60°C	0·00555	0·00626
28a	147	AS [28] BUT ZIRCOSIL	 700	"	0·00334	0·00369
29	165	MY745 H121 ZIRCOSIL	80 15 400	3 HRS. AT 100°C	0·00297	0·00334

TABLE 19

TOUGHNESS lb. in/in³		WORK OF FRACTURE erg / cm²		REMARKS	NUMBER IN THIS REPORT
RT	4K	RT	4K		
					19
					19a
					20
				RUMBLINGS 0·055"– 0·066"	20a
					21
			$3{\cdot}0 \times 10^5$		22
			$3{\cdot}6 \times 10^5$		23
					24
				EMERSON AND CUMING. CATALYST 11	25
947 (4)	3470			"	26
				"	27
				ZIRCONIUM SILICATE FILLER	28
					28a
					29

TABLE 20

NUMBER IN THIS REPORT	BEND TEST. ROOM TEMPERATURE							
	SPECIMEN		MAX. OR FRACTURE VALUES			MODULUS VALUES		
	TYPE	WIDTH x DEPTH ins.	FAILED ?	STRESS lbf/in²	STRAIN %	LINEAR ?	E lbf / in²	STRAIN %
19								
19a								
20								
20a								
21								
22								
23								
24								
25								
26	3	0·501 x 0·125	YES	5900 (1)	0·32	NO	$2{\cdot}0 \times 10^6$	0·2
27								
28								
28a								
29								

TABLE 21

BEND TEST 4K								NUMBER IN THIS REPORT
SPECIMEN		MAX. OR FRACTURE VALUES			MODULUS VALUES			
TYPE	WIDTH x DEPTH ins.	FAILED ?	STRESS lbf/in^2	STRAIN %	LINEAR ?	E lbf/in^2	STRAIN %	
								19
								19a
								20
								20a
								21
3	0·504 x 0·148	NO	16056	1·86	NO	1·075 x 10^6	1·0	22
3	0·498 x 0·148	NO	~ 9000	1·37	NO	1·11 x 10^6	0·2	23
								24
								25
3	0·522 x 0·126	YES	16452	0·42	YES	3·93 x 10^6		26
								27
								28
								28a
								29

TABLE 22

NUMBER IN THIS REPORT	COMPRESSION TEST. ROOM TEMPERATURE							
	SPECIMEN		MAX. OR FRACTURE VALUES			MODULUS VALUES		
	LENGTH ins.	SECTION ins.	FAILED ?	STRESS lbf/in²	STRAIN %	LINEAR ?	E lbf/in²	STRAIN %
19								
19a								
20	1·96	0·598 DIA.	NO	81	8·67	NO	$1·36 \times 10^3$	1·0
20a	2·03	0·615 DIA.	NO	2091	5·92	NO	$8·2 \times 10^4$	1·0
21	2·0	0·599 DIA.	NO	3548	1·41	YES (3)	$2·63 \times 10^5$	
22	2·0	0·585 DIA.	NO	3720	0·85	YES (3)	$4·87 \times 10^5$	
23	1·96	0·471 DIA.	NO	5680	1·42	FAIRLY	$3·98 \times 10^5$	
24								
25								
26								
27		0·502 x 0·502	NO	17500	1·6	NO	$1·92 \times 10^6$	0·2
28	1·94	0·499 x 0·504	NO	8906	0·89	NO	$1·13 \times 10^6$	0·2
28a	1·98	0·531 x 0·464	NO	15910		NO	$2·0 \times 10^6$	0·2
	1·98	0·531 x 0·464	NO	12273	0·93	NO	$1·67 \times 10^6$	0·2
29	2·04	0·616 DIA.	NO	11274	0·49	YES (3)	$2·50 \times 10^6$	

TABLE 23

COMPRESSION TEST. 4K								NUMBER IN THIS REPORT
SPECIMEN		MAX. OR FRACTURE VALUES			MODULUS VALUES			
LENGTH ins	SECTION ins	FAILED ?	STRESS lbf/in^2	STRAIN %	LINEAR ?	E lbf/in^2	STRAIN %	
								19
								19a
2·0	0·602 DIA.	NO	3560	0·42	YES (3)	9·45 x10^5		20
								20a
								21
								22
								23
								24
								25
								26
	0·502 x 0·502	YES	46500	1·47	NEARLY	3·90 x 10^6		27
1·94	0·504 x 0·499	YES	41051	1·67	YES (3)	2·70 x 10^6		28
1·96	0·498 x 0·513	NO	45155	1·01	YES (3)	4·88 x 10^6		28a
2·04	0·616 DIA.	NO	60143	1·27	YES (3)	5·0 x 10^6		29

TABLE 24

NUMBER IN THIS REPORT	USUAL NAME OR REFERENCE NUMBER	RESIN DETAILS			THERMAL CONTRACTION	
		INGREDIENT	PARTS BY WEIGHT	CORE	$-\int_{77}^{291} \alpha\, dT$	$-\int_{4}^{291} \alpha\, dT$
30	176	MY745 H121 ZIRCOSIL D	100 23 550	3 HRS. AT 100°C	0·00281	0·00310 (2)
31	187	MY745 H121 ZIRCOSIL 5	300 54 1000	3 HRS. AT 100°C	0·00370	0·00415
32	150	MY745 D230 Al_2O_3 POWDER CARBON BLACK	100 35 350 4	3 HRS. AT 100°C	0·00414 0·00550	0·00460 0·00585
33	164	MY745 H121 Al_2O_3 POWDER	100 18 340	3 HRS. AT 100°C	0·00372	0·00403
34	149	MY745 DY021 Al_2O_3 POWDER CARBON BLACK	100 20 435 4	3 HRS. AT 100° C	0·00422	0·00470
35	121	MY790 BGE Al_2O_3 POWDER CARBON BLACK CATALYST 11	100 12 360 20	3 HRS. AT 100°C	0·00440	0·00498
36	162	MY745 D230 TALC Al POWDER	100 44 75 35	12 HRS. AT 60°C	0·00697	0·00784
37	127	MY745 D230 TALC	100 44 70	12 HRS. AT 85°C OR 16 HRS. AT 60°C	0·00667 (2)	0·00751 (2)
37a	161	AS [37] BUT TALC	 100	12 HRS. AT 60°C	0·00506 (2)	0·00577
37b	163	AS [37] BUT TALC	 120	"	0·00592	0·00661
37c	125	AS [37] BUT TALC	 140	GEL AT 70°C + 12 HRS. AT 85°C	0·00573 (2)	0·00638

TABLE 25

TOUGHNESS lb. in/in³		WORK OF FRACTURE erg / cm²		REMARKS	NUMBER IN THIS REPORT
RT	4K	RT	4K		
7510 (4) 15820 (4)	9900 7140	2·4 x10⁵	2·9 x10⁵		30
4410 6860	3800				31
					32
					33
					34
18620 (4)	9000 (4)				35
					36
2770 (4)	3990 (4)			16% TALC BY VOLUME	37
2510 (4)	2030 (4) 2410 (4)			22% TALC BY VOLUME	37a
2470 (4)	5220 (4) 7250 (4)	3·2 x10⁵	2·4 x10⁵	25% TALC BY VOLUME	37b
1730 (4)	1700 (4)			28% TALC BY VOLUME	37c

TABLE 26

NUMBER IN THIS REPORT	BEND TEST. ROOM TEMPERATURE							
	SPECIMEN		MAX. OR FRACTURE VALUES			MODULUS VALUES		
	TYPE	WIDTH x DEPTH ins.	FAILED ?	STRESS lbf/in^2	STRAIN %	LINEAR ?	E lbf/in^2	STRAIN %
30	3	0·505 x 0·124	YES	15700 (1)	0·96	NO	2·52 x 10^6	0·2
	3	0·458 x 0·187	YES	13700 (1)	2·31	NO	2·94 x 10^6	0·2
31	3	0·544 x 0·123	YES	13253	0·67	FAIRLY	1·90 x 10^6	0·2
	3	0·533 x 0·123	YES	16908	0·81	FAIRLY	1·90 x 10^6	0·2
32								
33								
34								
35	3	0·492 x 0·193	YES	11120 (1)	3·35	NO	1·80 x 10^6 (1)	0·2
36								
37	3	0·498 x 0·220	YES	5550 (1)	1·0	NO	7·40 x 10^5 (1)	0·2
37a	3	0·499 x 0·177	YES	5240 (1)	0·67	NO	9·70 x 10^5 (1)	0·2
37b	3	0·497 x 0·211	YES	5140 (1)	0·96	NO	7·74 x 10^5 (1)	0·2
37c	3	0·503 x 0·220	YES	4870 (1)	0·71	NO	8·60 x 10^5 (1)	0·2

TABLE 27

BEND TEST 4K								NUMBER IN THIS REPORT
SPECIMEN		MAX. OR FRACTURE VALUES			MODULUS VALUES			
TYPE	WIDTH x DEPTH ins.	FAILED ?	STRESS lbf/in²	STRAIN %	LINEAR ?	E lbf/in²	STRAIN %	
3	0·515 x 0·125	YES	32194	0·61	YES	$5·25 \times 10^6$		30
3	0·448 x 0·188	YES	27555	0·52	YES	5.30×10^6		
3	0·521 x 0·125	YES	16749	0·45	YES	$3·67 \times 10^6$		31
								32
								33
								34
3	0·492 x 0·192	YES	27063	0·66	YES	$4·07 \times 10^6$		35
								36
3	0·552 x 0·124	YES	9818 (1)	0·81	NO	$1·32 \times 10^6$ (1)	0·2	37
3	0·497 x 0·193	YES	7808 (1)	0·52	NO	$1·64 \times 10^6$ (1)	0·2	37a
3	0·538 x 0·124	YES	7770 (1)	0·62	NO	$1·43 \times 10^6$ (1)	0·2	
3	0·550 x 0·122	YES	11600 (1)	0·90	NO	$1·71 \times 10^6$ (1)	0·2	37b
3	0·497 x 0·199	YES	10000 (1)	1·45	NO	$1·20 \times 10^6$ (1)	0·2	
3	0·503 x 0·220	YES	6960 (1)	0·49	NO	$1·51 \times 10^6$ (1)	0·2	37c

TABLE 28

NUMBER IN THIS REPORT	COMPRESSION TEST. ROOM TEMPERATURE							
	SPECIMEN		MAX. OR FRACTURE VALUES			MODULUS VALUES		
	LENGTH ins.	SECTION ins.	FAILED ?	STRESS lbf/in²	STRAIN %	LINEAR ?	E lbf/in²	STRAIN %
30	2·0	0·502 x 0·501	NO	22266	1·21	NO	$2·92 \times 10^6$	0·2
31	2·0	0·495 x 0·494	NO	27023	3·39	NO	$1·55 \times 10^6$	1·0
32	1·99	0·382 x 0·421	NO	11142	0·81	NO	$1·20 \times 10^6$	0·2
33	2·0	0·602 DIA.	NO	25970	1·99	NO	$1·85 \times 10^6$	1·0
34	2·0	0·563 x 0·600	NO	19893	1·79	NO	$1·6 \times 10^6$	1·0
35	2·0	0·494 x 0·492	NO	17510	1·35	NO	$1·75 \times 10^6$	0·2
36	2·0	0·602 DIA.	NO	9837	2·50	NO	$6·25 \times 10^5$	1·0
37	2·0	0·488 x 0·500	NO	10098	2·39	NO	$6·30 \times 10^5$	1·0
37a	2·0	0·612 DIA.	NO	7614	1·30	NO	$6·25 \times 10^5$	1·0
37b	2·0	0·607 DIA.	NO	8514	2·09	NO	$6·20 \times 10^5$	1·0
37c	1·81	0·504 x 0·496	NO	9856	2·59	NO	$4·85 \times 10^5$	0·2

TABLE 29

COMPRESSION TEST. 4K								NUMBER IN THIS REPORT
SPECIMEN		MAX. OR FRACTURE VALUES			MODULUS VALUES			
LENGTH ins.	SECTION ins.	FAILED ?	STRESS lbf/in²	STRAIN %	LINEAR ?	E lbf/in²	STRAIN %	
2·0	0·503 x 0·504	NO	35278	0·75	NO	$3·75 \times 10^6$	0·2	30
2·0	0·492 x 0·496	YES	67990	1·77	YES (3)	$4·10 \times 10^6$		31
1·99	0·382 x 0·421	NO	62364	1·50	YES (3)	$4·35 \times 10^6$		32
2·0	0·605 DIA.	NO	62334	1·64	YES (3)	$4·20 \times 10^6$		33
2·0	0·612 x 0·547	NO	26765	0·65	YES (3)	$4·33 \times 10^6$		34
2·0	0·492 x 0·494	NO	27648	0·80	YES (3)	$3·87 \times 10^6$		35
2·0	0·603 DIA.	YES	28237	2·90	NO	$1·30 \times 10^6$	1·0	36
2·0	0·490 x 0·502	YES	27319	2·59	NO	$1·20 \times 10^6$	1·0	37
2·0	0·614 DIA.	NO	25721	2·52	NO	$1·13 \times 10^6$	1·0	37a
2·0	0·609 DIA.	YES	20762	1·97	NO	$1·10 \times 10^6$	1·0	37b
1·82	0·502 x 0·496	YES	22041	2·02	NO	$1·30 \times 10^6$	1·0	37c

TABLE 30

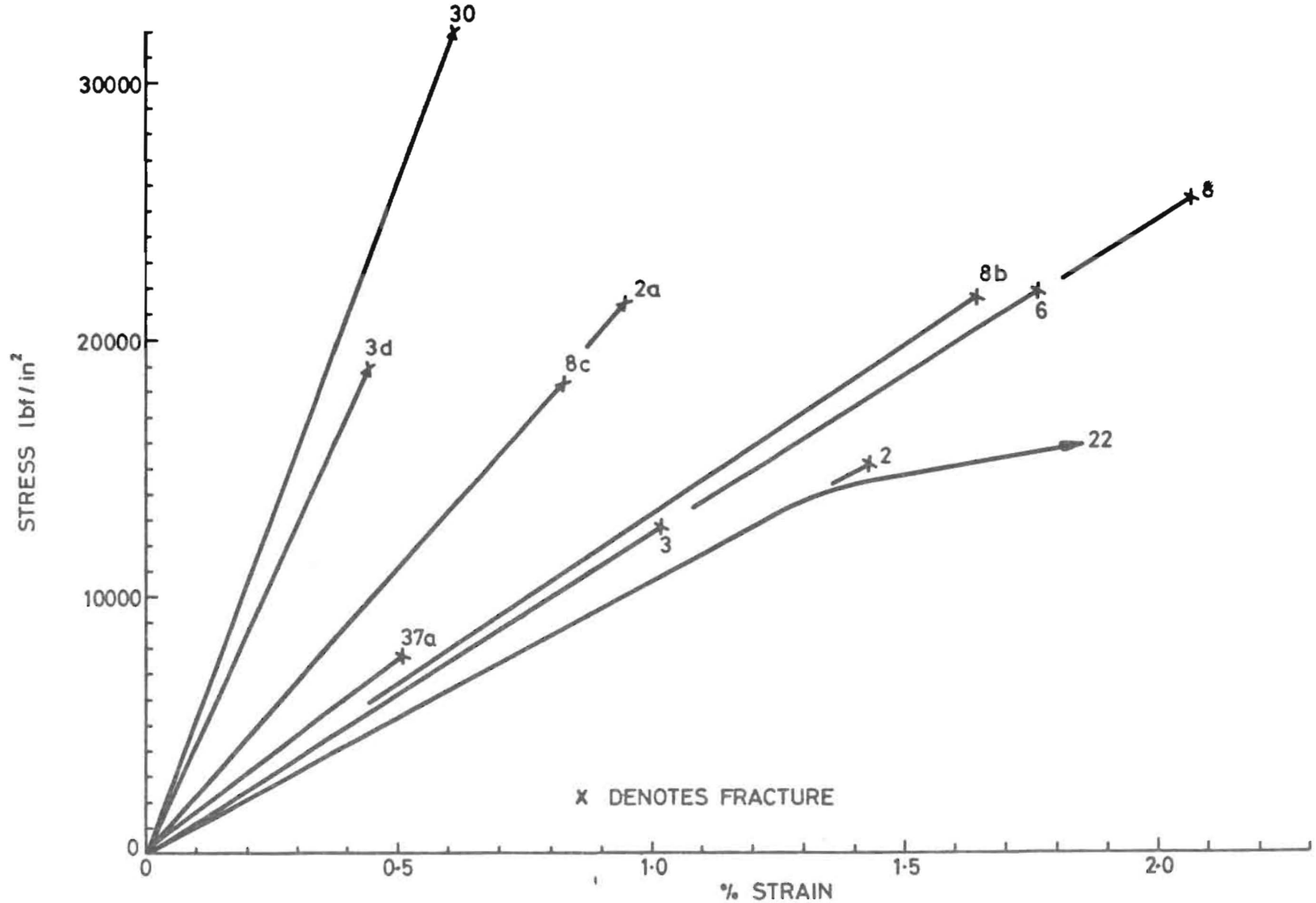

FIG. 1. STRESS-STRAIN CURVES AT 4K

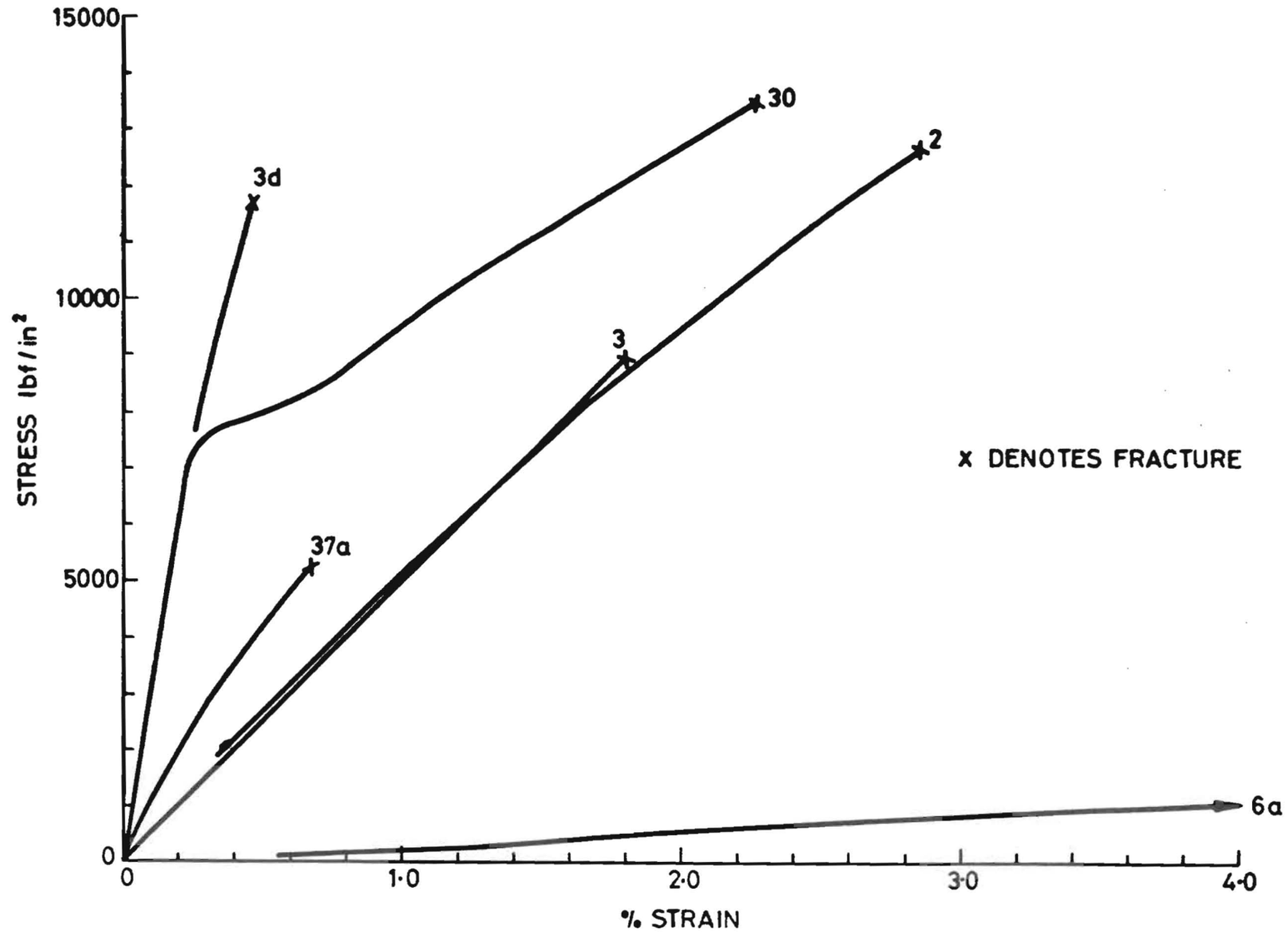

FIG. 2. STRESS-STRAIN CURVES AT ROOM TEMPERATURE

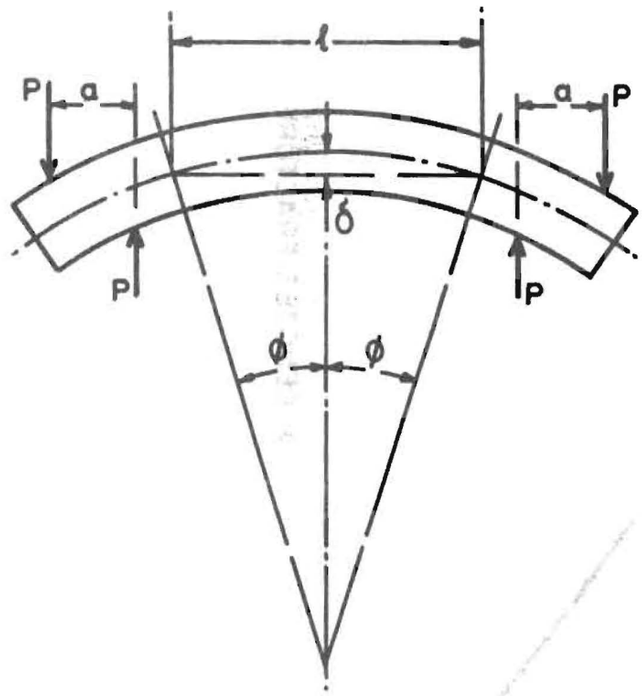

CONSTANT MOMENT OVER LENGTH $\ell = Pa$

FIG. 3. 4 POINT BEND TEST

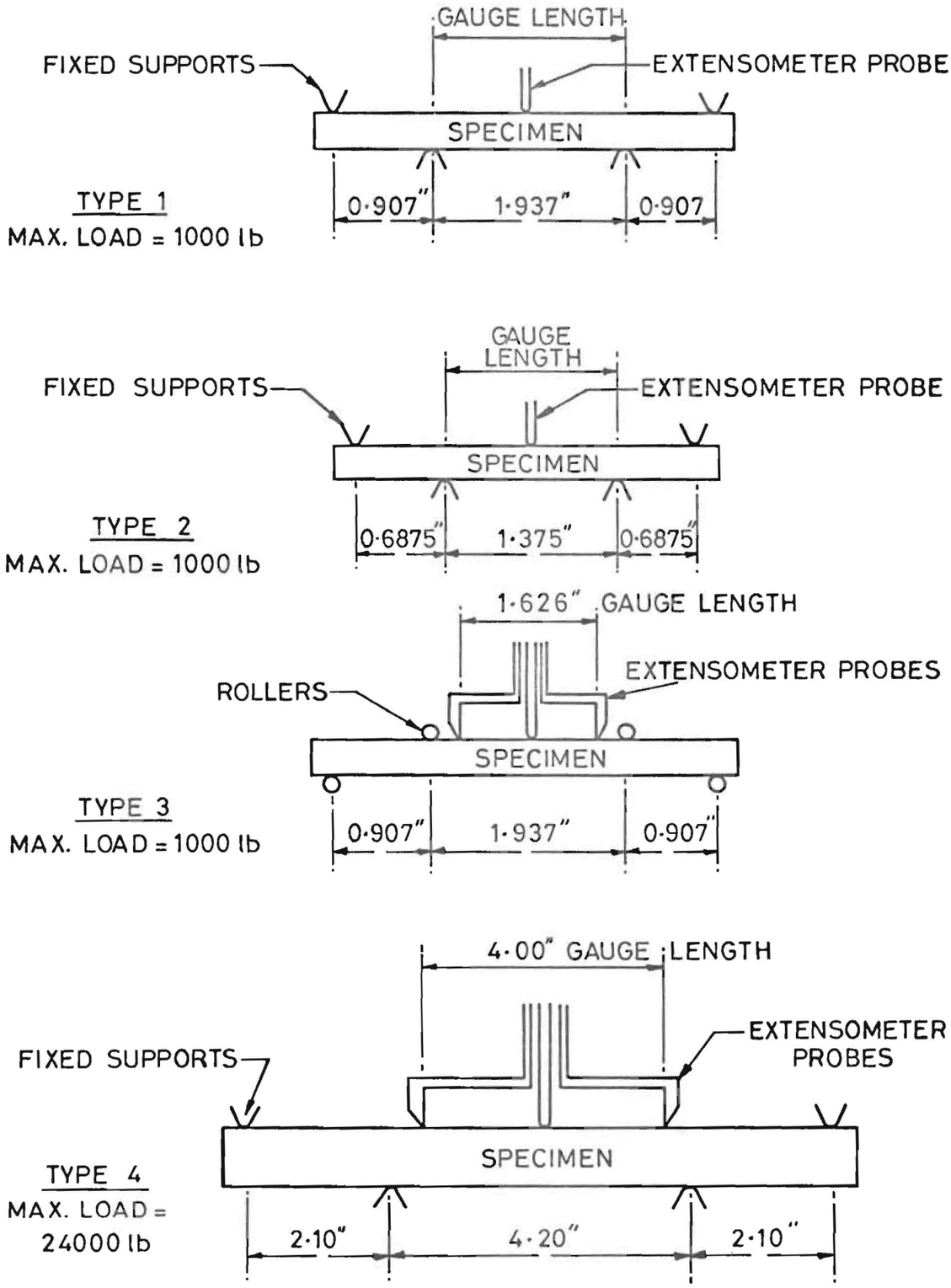
GAUGE LENGTH
FIXED SUPPORTS
EXTENSOMETER PROBE
SPECIMEN
TYPE 1
MAX. LOAD = 1000 lb
0·907"
1·937"
0·907
GAUGE LENGTH
FIXED SUPPORTS
EXTENSOMETER PROBE
SPECIMEN
TYPE 2
MAX. LOAD = 1000 lb
0·6875"
1·375"
0·6875"
1·626"
GAUGE LENGTH
EXTENSOMETER PROBES
ROLLERS
SPECIMEN
TYPE 3
MAX. LOAD = 1000 lb
0·907"
1·937"
0·907"
4·00" GAUGE LENGTH
EXTENSOMETER PROBES
FIXED SUPPORTS
SPECIMEN
TYPE 4
MAX. LOAD = 24000 lb
2·10"
4·20"
2·10"

FIG. 4.