RHEL/R 248

[redacted]

RHEL/R 248 [redacted]
Rutherford Laboratory Report

NAL LIBRARY
JUN 8 1972

A Transparent Touch-Screen Device for Interactive Computer-Graphics Displays

E M Mott

Science Research Council
Physics Development Group
Rutherford High Energy Laboratory
Chilton Didcot Berkshire
1972

SBN 90237636 5

Available from HMSO
price 20p net

RHEL/R 248

SCIENCE RESEARCH COUNCIL

A TRANSPARENT TOUCH-SCREEN DEVICE FOR INTERACTIVE COMPUTER-GRAPHICS DISPLAYS

E M Mott

ABSTRACT

A unit is described which provides a simple and economic method of achieving operator interaction with a computer-graphic control system by only requiring the operator to touch the display screen. A system of intersecting light beams and detectors is used to identify the selected position. An application of the system is also described.

Physics Development Group
Controls Section
Rutherford High Energy Laboratory
Chilton Didcot Berkshire

February 1972

CONTENTS

Section			Page
1		Introduction	1
2		Description	1
	2.1	Position detector	2
	2.2	Controller	3
	2.3	Interface	4
3		Application	4
4		Restrictions	5
5		Acknowledgements	5

Figures

1	Diagram of Detector System	6
2	The Detector Frame	6
3	Diagram of Optical System	7
4	Controller	7
5	Controller Circuit	8
6	Interface Circuit	9
7	Block Diagram of R.H.E.L.Application	10
8	GaAs Driver and Detector Head Amplifier	10
9	The Detector Frame Installed for Use	11

1. INTRODUCTION

The equipment was designed to operate with a PDP-8 computer principally used to control an extracted proton beam line on Nimrod*. Included in the system is a storage tube display peripheral, information written onto this display being transmitted to the main control room by a closed circuit television camera and monitor. It was this latter facility that lent itself to operating some form of interactive graphic system to allow operating staff fast access to certain machine conditions, eg. a diagnostic type of program to be used in the event of poor beam quality etc. The majority of commercially available interactive systems were not ideally suited to this particular application for reasons of expense, complexity or ease of use.

The equipment was installed with the existing display and CCTV system and overcame all three disadvantages mentioned. The electronics were deliberately kept as simple as possible and hence inexpensive and the principle used to read position information from the TV screen does not hinder viewing of the screen or involve the use of 'light pens', 'joy-stocks', 'cursors' etc., but simply requires one to touch the screen with a finger. The TV screen is covered with two sets of parallel light beams crossing at right angles; each of the set of points thus defined corresponds to the intersection of a unique pair of light beams. A display pattern is produced which includes areas which might be termed 'light buttons' that are in registration with nominated points of intersection and serve to mark their position for the operator. When such a 'light button' is 'pressed' the coordinate is read by observing the failure of light beams, corresponding to that position, to reach their associated detectors.

2. DESCRIPTION

The equipment can be divided into three main parts which contain the following items,(see also Figure 1).

i. Position detector

A supporting frame, an optical system and the electronics to drive and detect light beams.

---

* Nimrod is a 7 GeV proton synchrotron particle accelerator.

ii. Controller

All the other electronics and power supplies required to operate the position detector and signal handling to a computer interface.

iii. Interface

Electronics required to select and buffer signals to and from the computer and controller.

2.1 Position detector

This was designed to fit over the front of the standard 11-inch TV monitor used in the Nimrod Main Control Room. It contains two sets of light beams, horizontal and vertical, and each beam has associated with it a transmitter element, an optical system and a receiver element (Figure 2). The transmitter element is a semi-conductor infra-red emitter (GaAs), the output from which is focussed into an approximately parallel beam by a lens. The beam traverses the TV screen (about 1 cm in front of the glass) and is focussed by another lens onto a photo-transistor detector (Figure 3). The matrix so formed defines a set of 'light buttons'.

On the unit in use the number of beams in each plane was determined by considering:

a. The physical size of the screen.

b. The aspect ratio (4:3).

c. Average diameter of the human forefinger.

d. Light beam diameter produced by a simple optical system.

e. The form in which data would be communicated to the computer.

The nett result of this exercise produced a detector with an aperture of $8\frac{5}{8}$ x $6\frac{1}{4}$ inches, eight X-axis beams, seven Y-axis beams with a separation of 1 inch and 7/8 inch respectively and a beam diameter of 3/8 inch. The X and Y axis beams could be conveniently encoded to produce six-bit data words which, of course, fitted into a PDP-8 12-bit word easily in the form of two octal digits, each representing an X and a Y axis beam respectively.

Using infra-red light for the beams has two advantages. First, it causes no interference to the operator viewing the screen and, secondly, with the use of gallium arsenide emitters, one can pulse them to produce higher intensity beams, allowing the sensitivity of the receiver to be reduced or the threshold of operation to be raised and hence improve the signal to

noise ratio. This is especially important in environments with high levels of ambient light from incandescent sources. By using collimated sources and detectors and employing red lenses the effect is improved further. The lenses used are in fact red moulded glass as used on Post Office type lamp indicators. These were found to be of non-uniform quality and the optically better ones had to be selected.

A Dural frame is used to support the optical system around the edge of the TV viewing area. It also contains the electronics necessary to drive each GaAs emitter, and two-stage head amplifiers for each photo-transistor. It is conceivable that this type of position detector could be used in other systems whether they utilise TV, direct display or no display at all.

2.2 Controller

The controller is connected to the position detector by means of two short cables and is in the form of an open, rack mounting, standard RHEL chassis and contains all the timing, coding, drive and power supplies for the detector frame (Figures 4 & 5). As the I R emitters are pulsed a timing system is required which provides, by means of monostable circuitry, separate pulses and a delay to drive the emitters and detectors at the correct time relative to each other at a repetition frequency of 50 Hz, the latter being derived from the mains supply. In the 'dormant' state neither emitters nor receiver logic are operating, the drive monostables being gated off after a previous operator selection. Initiation can be achieved by sending a pulse from the external equipment to enable the system. This pulse allows the emitter monostable to run, giving 200 μs bursts of light from all GaAs emitters. The detectors receive these light pulses and, if all beams are 'seen', logic connected to the detectors opens the receiver gate and allows the receiver monostable to run at 180 μs with a 10 μs delay to enable beam failure by operator action to be detected. On sensing an X and a Y axis beam obstruction simultaneously, logic gates again change state and load the encoded co-ordinate into a buffer, inhibit further beam transmission and send a pulse out to a computer or other external equipment.

By checking for all beams present before reading co-ordinates, one effectively inter-locks the 'light buttons' against repetitive selection, a positive embarrassment in some applications. Until activated externally by means of an enable pulse the detector frame remains in a dormant state. A small push-button is provided which can send a pulse and off-screen

co-ordinate to the external equipment to demand attention.

Data from the X and Y axis receivers is first encoded into two octal digits in the form of 3-bit binary outputs and strobed into a TTL 'D' type latch by the detector gate pulse. These latches feed into discrete component line drivers to produce a low impedance signal output to the interface. Indicator lamps are used to show the state of the logic and the binary co-ordinate output.

2.3 Interface

Very simple electronics are employed to allow computer access to the data, state bistable and enable circuitry by means of a device selector, input-output transfer pulse gating and data to computer register gating. A diagram of the interface used in conjunction with a PDP-8 is shown in Figure 6.

3. APPLICATION

A brief description of the particular application at RHEL is worthy of note (Figure 7). As previously discussed, the position detector was designed to fit a particular system to solve a specific problem (Sect.1). The system in use now provides, using specially written software, a diagnostic program which asks the operator to choose one of several areas of Nimrod to be investigated. This diagnostic routine is first called by pressing the push button on the detector frame and the display responds by showing abbreviated titles of certain Nimrod equipment in the form of light buttons which correspond to specified co-ordinates. By merely pointing a finger and touching the desired option, the program is arranged to branch to the corresponding routine and proceeds to ask for further options or lists data as required.

By providing various light button options on each freshly displayed 'page' one can proceed through a check list or diagnostic run-down with very little effort and in a comparatively short time, perhaps saving that time for some urgent operation elsewhere. By using specific co-ordinates each time and arranging the software to ignore any other selections that are invalid, the incidence of operator errors is reduced to a minimum.

4. RESTRICTIONS

Because simple electronics are employed, complete checking and gating of the detector is not performed. This leads to a slight disadvantage in the operation. Transistor-transistor logic micro-circuits are used to do this checking and because unavoidable inversions take place between different functions, a hysterisis effect is encountered in the TTL characteristic which allows the X, Y beam coincidence logic to operate and gate data into the buffer before the logic looking at the beams has completely changed state. This situation will occur if one of the beams is only just cut off, sufficient to cause gating, and results in one half of the co-ordinate being missed completely. Fortunately this condition is marginal, being the exception not the rule, and is further reduced by a factor of approximately 100:1 because the system is pulsed. In use, protective software again reduces any effect from this and has not proved a shortcoming in normal operation.

Other restrictions are purely physical and are principally: minimum separation of beams; minimum size of frame area relative to useful number of co-ordinates available; and maximum length of beam compatible with reliable operation. It is suggested that minimum beam separation is about $\frac{3}{4}$ inch before difficulty of selection becomes apparent. Minimum useful size of screen is really dependent on each particular application, but the unit in use has 56 possible co-ordinates and this was felt to give sufficient room for enough light buttons to operate and leave approximately three-quarters of the screen available for displaying diagnostic information. Length of light beams is again dependent on individual requirements but, the simple optical system in use would allow reliable operation with beam lengths of 18 inches. This could obviously be improved by using better optics.

5. ACKNOWLEDGEMENTS

The author acknowledges the encouragement and criticism given by J M Dickson and R H C Morgan during the development and report stages of this project.

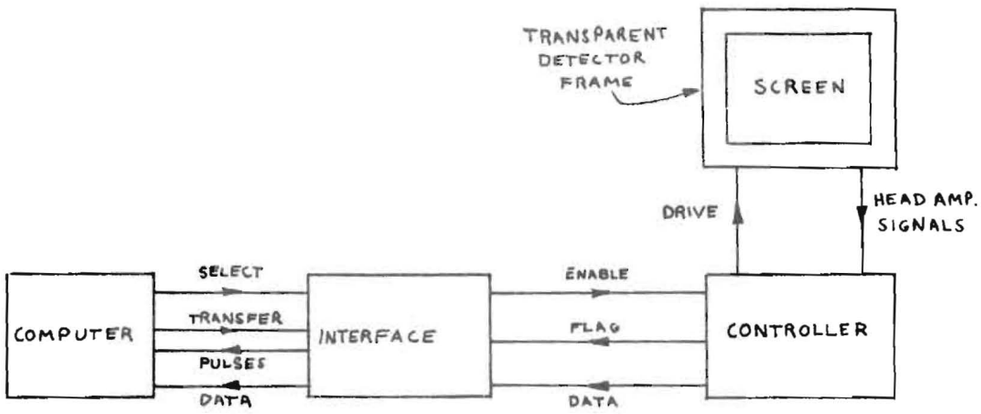

FIG.1 DIAGRAM OF DETECTOR SYSTEM

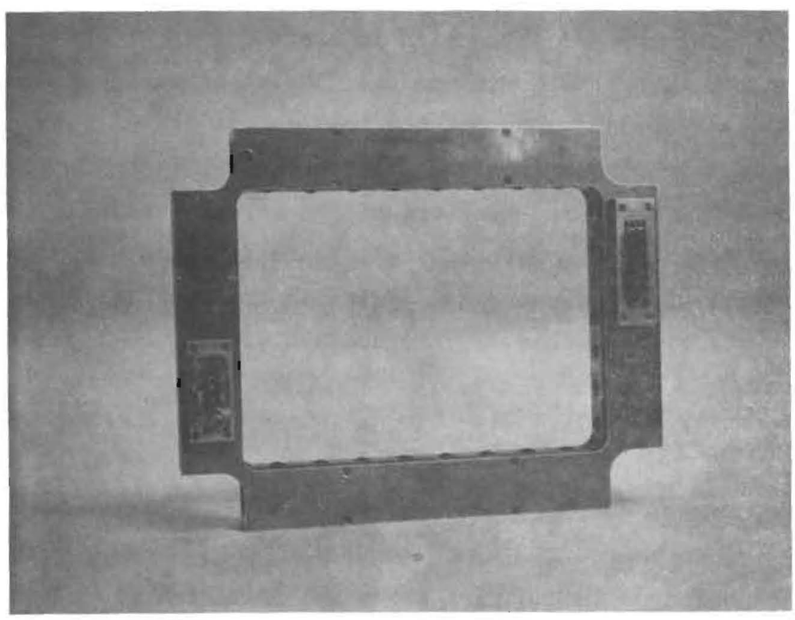

FIG.2 THE DETECTOR FRAME

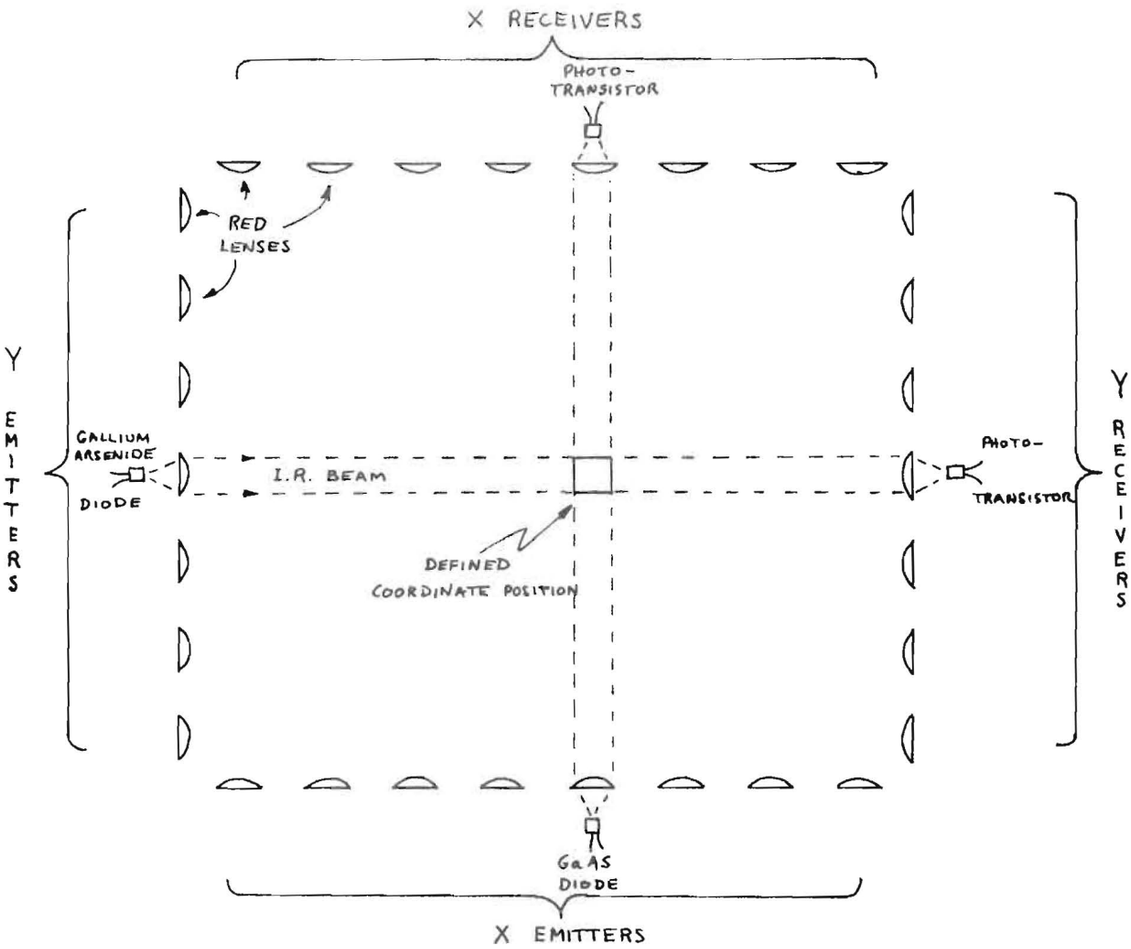

FIG.3 DIAGRAM OF OPTICAL SYSTEM

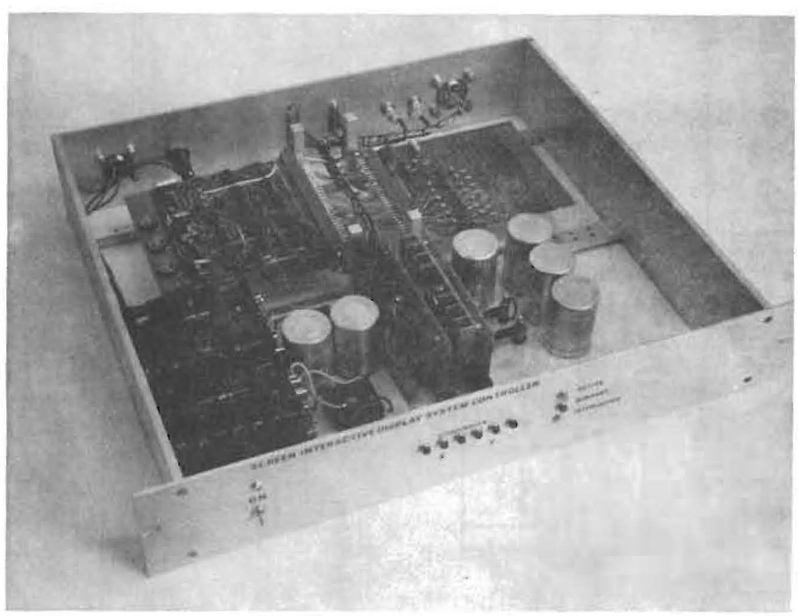

FIG.4 CONTROLLER

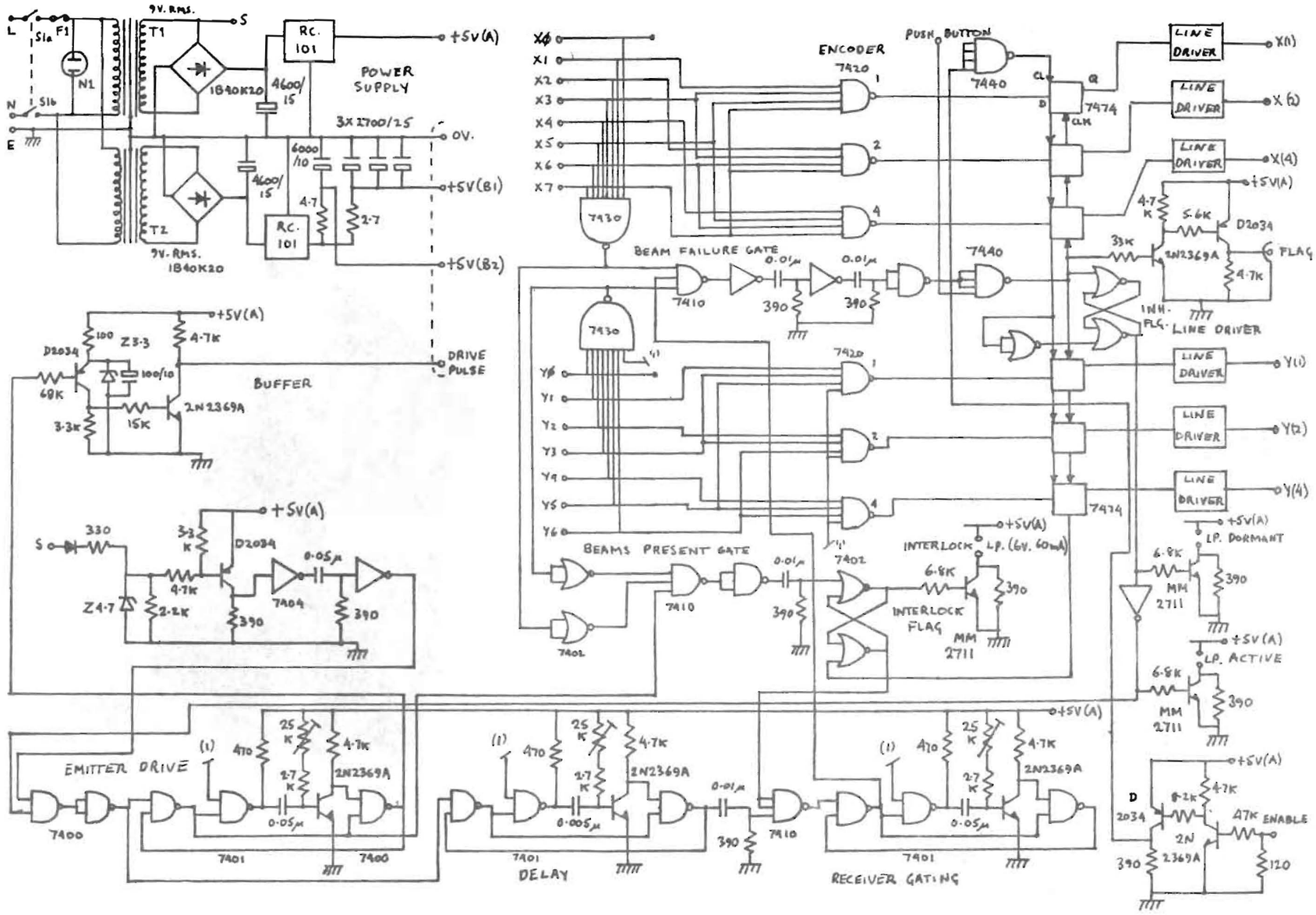

FIG.5 CONTROLLER CIRCUIT

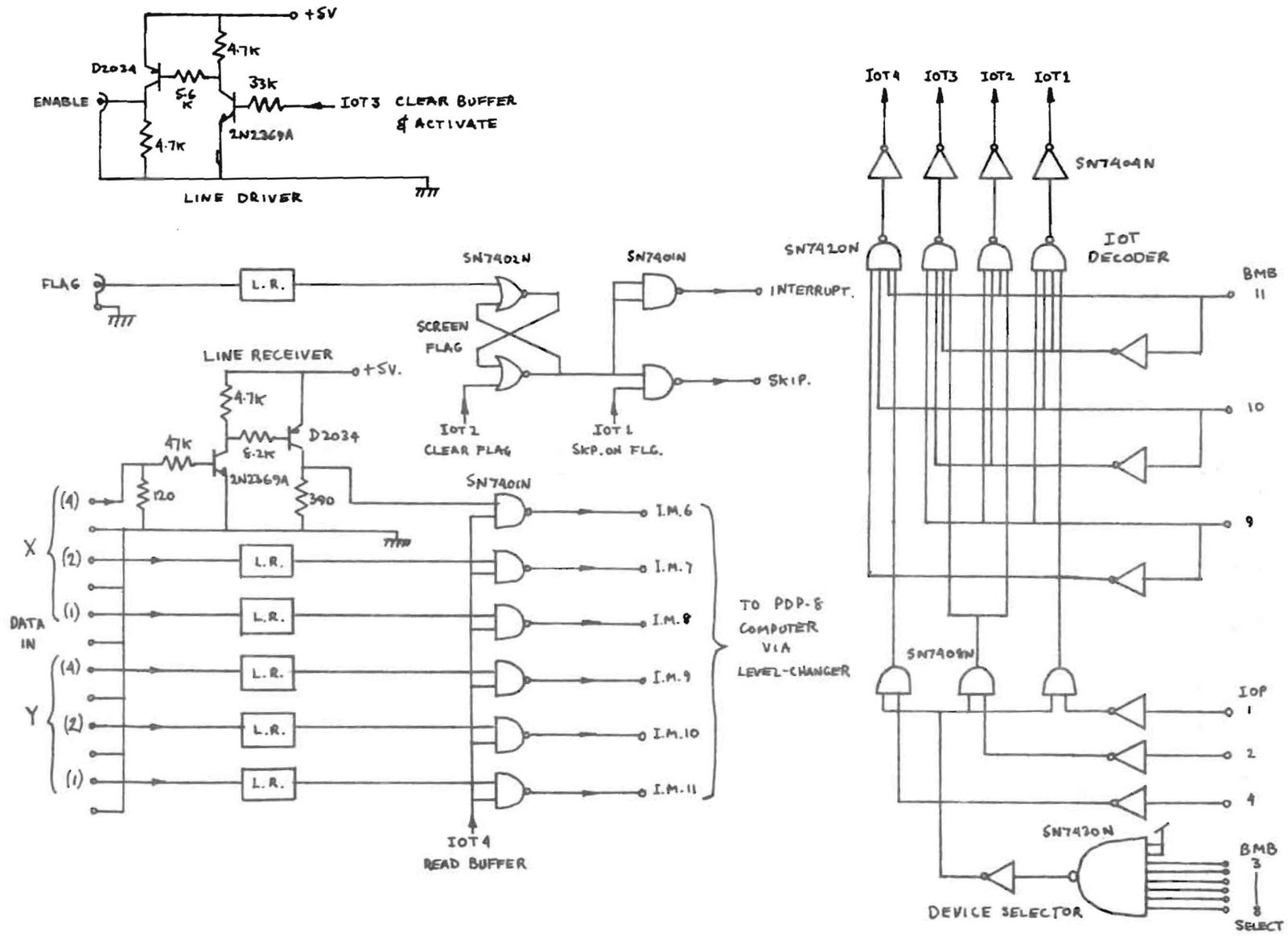

FIG.6 INTERFACE CIRCUIT

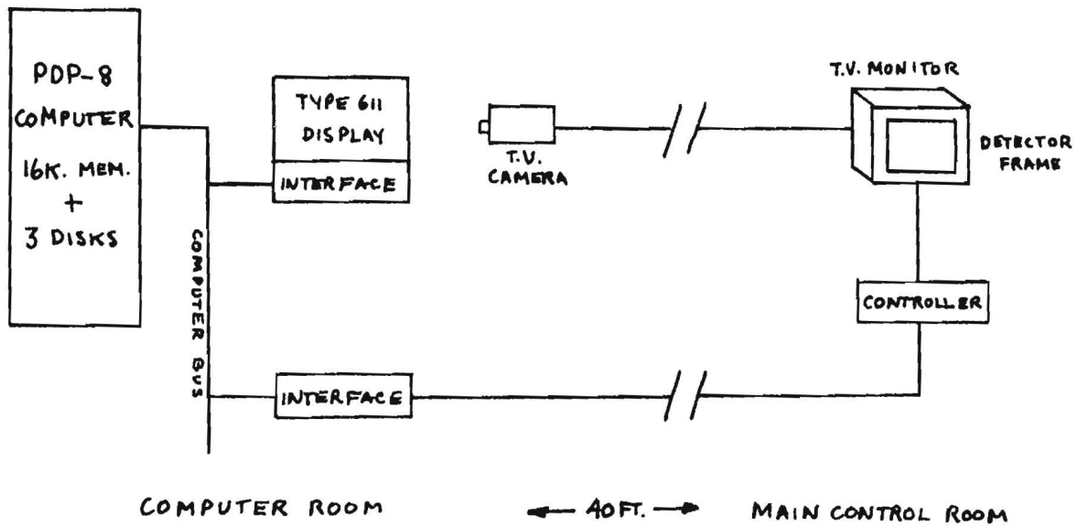

FIG.7 BLOCK DIAGRAM OF R.H.E.L.APPLICATION

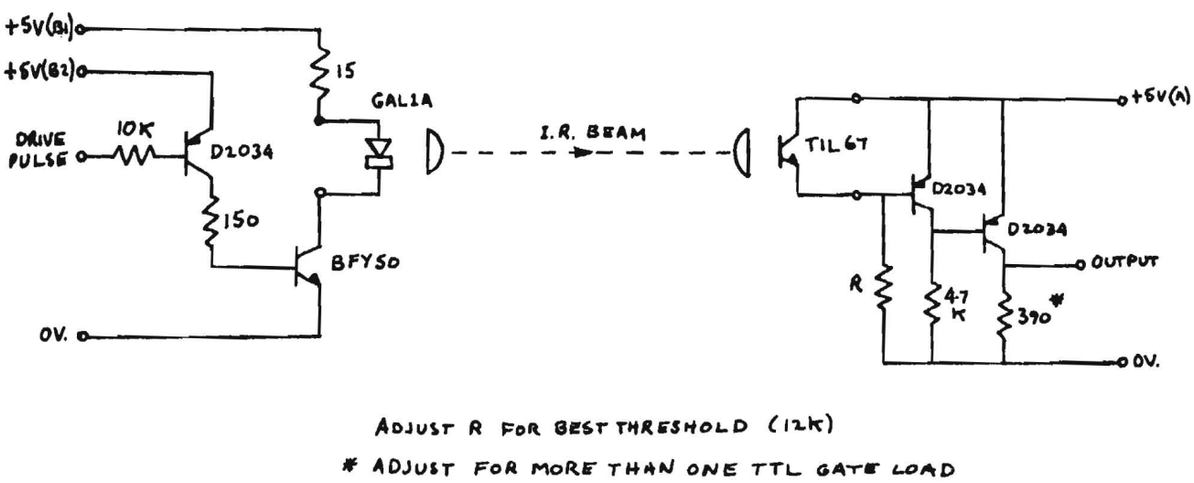

FIG.8 GaAs DRIVER AND DETECTOR HEAD AMPLIFIER

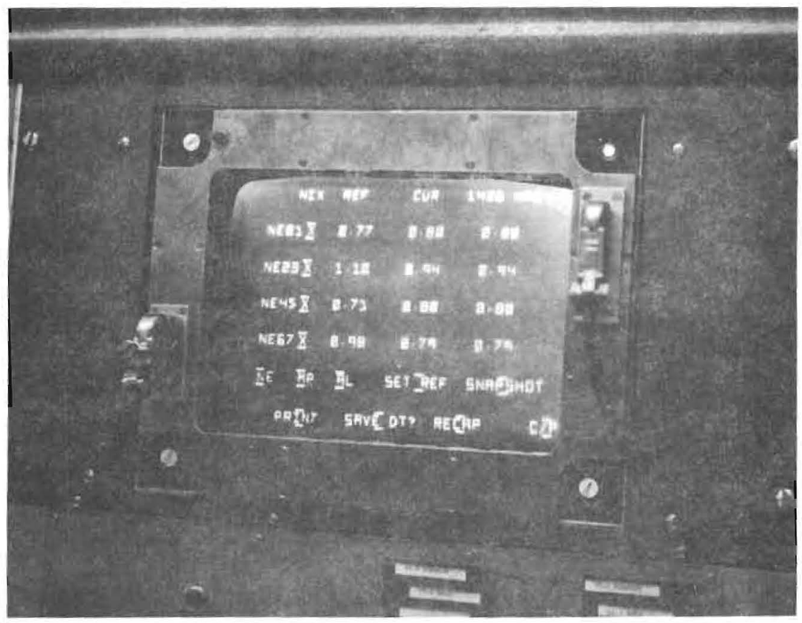

FIG.9 THE DETECTOR FRAME INSTALLED FOR USE