RHEL/R 183
England, (Rutherford)
NAL LIBRARY
NOV 3 1969

RHEL/R 183
Rutherford Laboratory Report

2069

Proceedings of a Seminar on Future Development of Automatic Bubble Chamber Film Measurement

13th October 1968

Edited by
I Butterworth CM Fisher

Science Research Council

Rutherford High Energy Laboratory
Chilton Didcot Berkshire
1969

Available from HMSO
price 10s net

RHEL/R 183

SCIENCE RESEARCH COUNCIL

PROCEEDINGS OF A SEMINAR ON FUTURE DEVELOPMENT OF AUTOMATIC BUBBLE CHAMBER FILM MEASUREMENT

13th October 1968

EDITORS

I. Butterworth
C.M. Fisher

Rutherford High Energy Laboratory,
Chilton Didcot Berkshire

June, 1969.

CONTENTS

		Page
SESSION I		1
1.	The Present Status of Well Established Measuring Devices	2
	DISCUSSION	5
2.	PEPR Systems	6
	DISCUSSION	7
3.	SWEEPNIK	7
4.	SWEEPNIK Performance to Date	10
	DISCUSSION	12
5.	What is Right and What is Wrong with H.P.D.	15
	DISCUSSION	18
6.	Polly Systems	22
	DISCUSSION	26
SESSION II		
7.	Bubble Images in the New Chambers	28
	DISCUSSION	31
8.	Work done by the LBCG Group at C.E.R.N.	33
9.	Precision of Optical Constants of 12 ft. Argonne Chamber	37
10.	Scan-Measure System for Gargamelle	38
11.	Future Work on PEPR	42
	DISCUSSION	43
12.	GENERAL DISCUSSION	43

SESSION 1

Chairman: I. Butterworth (Rutherford Laboratory)

Chairman's Opening Remarks

This seminar is devoted to the problems and future development of the systems for the automatic measurement of bubble chamber film. Now that automatic devices are successfully operating in a large number of laboratories around the world, we should sit back and look at the future. The need for this is obviously enhanced by the fact that the next generation of chambers will be with us soon (not necessarily large chambers - of course here we also have a vested interest in precision chambers). This meeting was tuned to follow the Argonne Conference so that it means that some of the people here who were at Argonne have had a chance, at least informally, to discuss the future with our colleagues overseas and so we might get some of their opinions secondhand.

1. The Present Status of Well Established Measuring Devices

I. Butterworth (R.H.E.L.)

I will define well established measuring devices as those which have measured many more than 100,000 events at some laboratory or another, and instead of having detailed status reports on the development of such systems in this country I will simply give a resumé of the present situation. I would, however, like to begin with the question "Why build automatic measuring machines at all?" I want to drive this question home by showing the film of the conventional film plane measuring machines at Berkeley on-line to a computer in the so-called "COBWEB" system. This system was developed by the Powell-Birge group, and is used by them and the Trilling-Goldhaber group. [At this stage the film of the COBWEB system, kindly lent by Prof. R.W. Birge was shown]. I think one of the most important comments to make is that this system was developed by a group with access to the largest HPD throughput in the world. This goes to confirm the conclusions reached in the recent survey carried out by the CERN TCC, which showed that groups with automatic measuring devices do not intend to run down their conventional measuring facilities. In fact, quite the converse, they wish to see them built up in order to deal with hard-core events and HPD kick-backs.

Actually on-line to the COBWEB system at the moment are two Frankensteins and one digitized microscope from the Powell-Birge group, (the digitized microscope is really an archaic machine but still gives 12 events an hour under this system), and two Frankensteins from the Trilling-Goldhaber group with a third about to be attached. Their real rate for the best Frankenstein, including coffee breaks etc., for events which are HPD kick-backs and the general mix of events to be measured, is 25 - 35 events/hour for the 25" chamber. On straight virgin 4-prong events their best Frankenstein gives 48 events/hour. The computer is a 7044 which they picked up free. It is clearly much more powerful than is necessary; for example it has 8 tape drives. Their programme is 24K words long with no 3-dimensional checking, but they plan to do 3-dimensional checking on-line later.

The cost of the system including interface, improvement of film transport, replacement of stage-drive by screw and ball drives with Moire gratings, including salaries, but of course excluding the computer, was $250,000. They plan to measure ionisation by sampling the pulse height as they go along the track. This is not yet being used for physics, but graphs of pulse height against theoretical ionisation without any normalization to beam track already suggests that a minimum track can be separated from a twice minimum track.

People interested in details of the project should write for UCRL-18528 Rev.

Such systems obviously very much raise the question as to whether one needs an automatic device when one finds that in practice owners of automatic devices often talk about event rates that are no greater than 30 events an hour.

SMP

Only one British group, Glasgow, uses the SMP system. With 3 SMP's they measure 3,000 events per week, one machine giving 1.5K events per week on film from the Saclay chamber, the remaining two combined giving 1.4K per week from the 2 metre chamber. The measurement accuracy is 7-8 microns. They have now measured more than 200,000 events and so can claim to be the most successful semi-automatic group in Britain. However in view of the limited precision, absence of ionisation density information and the small picture area that is conveniently digitized, this system is one with essentially no potential for future development.

HPD

The largest event throughput is of course that achieved at Berkeley, where the rate for 1 HPD is 12K events/week. Howard White claims that he is held down to this by the user physicists not consistently providing sufficient film and that his real rate could be 15K events/week. These rates of course involve a large component from the small 25" chamber but some 80" and 82" film. However the film invariably has all three views on one film strip, so that geometry is run as a background job in the fully committed double cored 7090 on the last batch of 15 events measured. Geometry failures are not immediately rectified, but it means that there is an instantaneous quality check. Remeasures are essentially done on the COBWEB Frankensteins.

A second HPD essentially identical to the first is in construction and will be run as a completely independent second machine.

Brookhaven have two machines but only schedule one at any given time and actually produce events at about half the Berkeley rate. In 1968 they will measure 315K events. At first geometry they demand 3-views of each track and only 50 per cent of events pass. For failing events the HPD digitizings are fixed by light pen and then there is an 88 per cent pass rate. The remaining 12 per cent are thrown in the dustbin.

They are convinced of the desirability of remeasuring using the HPD digitizings and are building the so-called Lotus system. In this system instead of using Frankensteins to remeasure they will have a video display of failed HPD digitizings at a scan table showing the optical image of the track together with a teletype and tracker ball. This can then be used instead of

the light pen to allow editing and fix up of failed events. These displays, plus others for the use of on-line SUMX, plus the image plane digitizers will be on a Sigma 7 computer.

CERN currently find their instantaneous rate to be 75 events/hour dropping to 44 events/hour allowing for film change etc., whilst the long term production rate is only 29 events/hour. Their effort of course is being concentrated on making the 29 events more compatible with the 75 events/hour. They have a 77 per cent pass rate.

All three groups use ionization information from the HPD and can distinguish at the two standard deviation level 1.2 - 1.25 from minimum (in this connection it should be pointed out that Tom Day at Maryland claims that he has trained his scanners to distinguish 1.2 from minimum visually, and feels this can be pushed to 1.15).

Columbia use their HPD in a specialized pattern recognition mode. In a study of K^0 decays they want to find the ratio of zero-prong events to 001 events. For this they dare not use human scanners who would be biased to the latter topology. By scanning with an HPD the zero-prongs are found independently of the K^0 decay. They don't of course mind if they don't have a 100 per cent detection efficiency provided there is no bias. They scan at a rate of 310 frames per hour over the long term. They find 95 per cent of zero prongs, but cut this sample to 80 per cent to ensure absence of bias. In particular they demand that a zero-prong shall stop well free of the beam tracks, in clear areas of the chamber. They have also been scanning for Σ leptonic decays and sort out the 2-body decays from the 3-body at a rate of 75 Σ's per hour.

Finally the position of the British HPD Groups.

Rutherford Laboratory has measured 21K 2-prong events from the Saclay Chamber in a K^-p experiment. The present pass rate is 82 per cent; 8 per cent fail because of beam momentum faults. The 3-dimensional helix errors peak at 3-4 microns for tracks reconstructed on 3 views. Ionization density is used in a somewhat ad hoc fashion.

Imperial College have measured 12K events in the 1.50 chamber with a pass rate of 60 per cent. They are now processing 2 metre film using an on-line masking to limit the number of digitizings per picture.

Birmingham have reached the stage where they can read digitizings into the computer, can decode picture number, and move the film about etc.

Liverpool are at an earlier stage of development and are currently assembling their system.

DISCUSSION

Question:

In the large Berkeley HPD throughput, do you know how many events get through the system as distinct from how many they measure?

Butterworth:

You mean how many pass geometry?
This sort of number varies from experiment to experiment, overall it is somewhere better than 80%. Howard has done a breakdown of efficiency against which girl made the roads - and it's girl dependent. A physicist, careful but with no experience gave him a 90% pass rate, and of the failures 5% were due to logical mistakes because he was unfamiliar with the routine. So if you like that's a 95% pass rate. Of course you can say that if Filter is girl dependent it is faulty, but basically he has not changed Haze since 1964 or something like that. Incidentally, he says that's why he gets high productivity he isn't always fiddling with the programme. Remember much of the film is from the 25" chamber which is very nice.

I. Hughes:

How many digitizing tables do they have?

Butterworth:

I think six in actual operation. They talk of eight.

A. Oxley:

They have six actually in operation.

Question:

What accuracy do the Cob web machines give?

Butterworth:

Less than I expected. They only do a 2D film check. They demand better than 10 μ on a beam and better than 15 μ on a secondary. These checks are read in off cards and can be changed. When they look at their deviations in space they vary between 5 and 16 μ and as I remember it they peak at 10 μ. You'll have noticed on the film that they only measure two fiducials, it may be that the problems are not due to measurement but to reconstruction. They plan to put 3D checking on line.

P. Dornan:

Which programme do they use at Columbia for automatic scanning?

Butterworth:

Perhaps Peter Davey knows. I presume it is almost identical to the Yale PEPR programme.

P. Davey:

I would think in fact that they are using the Brookhaven one. I would think so,but I really don't know.

2. PEPR Systems

Status of Oxford PEPR

C.B. Brooks and J.F. Harris (Oxford)

The Oxford PEPR is at present measuring 2.0 M chamber reverse-developed film. A human scanner identifies frames of interest on the scan table, and further defines on one view only a zone about 60 mm square in space within which a vertex of interest lies. This information is recorded on standard mark-sense cards: the resulting tape can be routed either to the conventional measuring machine system or to PEPR. The PEPR system measures one view at a time. An area of 120 mm square in space (8 mm square on film) is searched by PEPR in its "area scan" mode, immediately after measuring the fiducials. All sections of track found are intersected with each other to produce a most probable vertex. If a satisfactory vertex is found, tracks are followed outwards and re-intersected to produce an accurate vertex location. About 10 points per track, vertex point, and fiducials are output: the output of all 3 views can then be merged interchangeably with conventional machine output for a specific experiment.

A preliminary batch of about 200 2-prongs and 4-prongs has been measured. 86% of these passed the R.H.E.L. Geometry programme. The helix fit errors for all tracks peaked at 8-9 microns: some of this error can be attributed to the use of a least count of 9 microns at present.

The system is at present being tuned-up for its first physics experiment, upon reverse-developed 600 MeV/c π^- film from the 81 cm Saclay bubble chamber at SATURNE. It is calibrated once a day over a 90 x 45 mm film area. Residual errors after fitting 110 grid intersections with a 5th order polynomial are 2-3 microns in the film plane.

Status of PEPR's elsewhere

J.H. Mulvey (read by P. G. Davey, Oxford)

In addition to the original PEPR devices at MIT and Yale, there are now replicas of the MIT 5" system (manufactured by Astrodata Inc.) at Nijmegen, Heidelberg, Maryland, Johns Hopkins, Indiana and Rutgers. Modified PEPR's are being constructed at Princeton and Duke Universities. The MIT and Yale systems are operational for physics.

At MIT using "clear-point" guidance some 70,000 events mostly 2 and 4-prongs with some V^0's from a 3 to 4 GeV/c π^+p experiment in the Argonne 30" chamber have been measured. There is some preselection, e.g. events with nearby beams are eliminated. Some 15% of all events are fixed up by operator light-pen intervention at the time of measurement. After this, about 85% are successful. Typically

1000 to 1500 events are measured in a 16-hour day, although an instantaneous rate of 200 events/hour can be reached if the operator does not intervene.

At Yale, zone-guidance is used. A zone is about 2 mm square on film. 90,000 $K^- p \rightarrow \Sigma\pi$ 2-vertex events have been measured on 400 MeV/c K^- film. About 700 events are measured per 16-hour day. About 30% of events fail and are measured conventionally. At both Yale and MIT accuracy is better than manual measurement.

Practically all of the above events at MIT and Yale have been measured this year (i.e. since January 1968). All other PEPR's are in various stages of being tuned up.

DISCUSSION

I. Butterworth:

If you were starting now with PEPR would you build in a line element?

Davey:

Ah! I'll have to come to that in the talk on the future of PEPR. I regard that as an open question and one that ought to be debated. I don't think it is open and shut.

W.T. Welford:

What is the bandwidth of the Oxford PEPR as at present run.

Davey:

The track pulse is 4 μs wide, i.e. half a megacycle bandwidth. We were running at 1 Megacycle with our previous tube. The new precision tube has made us slow down our sweep speed because of low beam density. This is a temporary expedient we think we can get back the light and still keep the higher precision tube.

3. SWEEPNIK

O.R. Frisch (Cambridge)

The track measuring instrument I want to talk about, Fig. 1, has been designed and built at the Cavendish Laboratory during the last three years, and we have now been measuring track events for the last couple of months. It is a track-following instrument, not a scanner, but much faster than the ones (like Frankenstein) where the film stage or the lens is moved, or both. Our film stage is stationary, but there is a light beam or 'probe' which can be directed to any point of the film with the help of two 'steering mirrors'; moreover those mirrors are under control of a small on-line computer (PDP 7). This combination of a computer and of mirror capable of responding within milliseconds makes it possible to follow a track at about 2 inches per second on the film, in steps of one mm; so it makes and stores 48 measurements a second; the measuring unit is a little over one micron.

The light beam is derived from a helium-neon laser* with the help of several lenses - one of them astigmatic - which produce a line image on the film; moreover a spinning prism causes the image (Fig. 2) to sweep out a ring-shaped area 48 times a second. The light that passes through the film is collected into a photomultiplier, and if the centre of the probe - of the circular scan - is close to a track the multiplier records a sharp dip in brightness. There are two such dips during each sweep, about 180° apart; but as a rule the computer arranges for an electronic gate (which we call 'the eye') to open (Fig. 3) for a small portion of the sweep only, so that all unwanted signals are suppressed. The prism that causes the line image to rotate is spun by a motor which also carries a coded disc which informs the computer of the angle (at any given instant) between the line image and a fixed direction on the film. In track following, the computer then moves both the steering mirrors by the appropriate amount so as to move the centre of the probe to the point where the line image - or more precisely its midpoint - has just crossed the track; in this way the probe is made to follow the track in steps of one millimetre. Each step is completed in less than 15 ms, so that the centre of the probe has stopped moving by the time the eye opens again to look for a track signal.

I won't say much about the steering mirrors; they are optically flat, two inches in diameter, and controlled by a servo mechanism based on the counting of laser interference fringes into a scaler (one for each mirror). One unit in the scaler corresponds to a tilt of one tenth of a second of arc, that is, a movement of the probe of a little over one micron on the film. The computer can move the mirrors by setting a number into the scaler; this causes an error signal and moves the mirrors with the help of solenoids until the scaler is empty again. It also adds that number into a store which thus keeps track of x and y, the co-ordinates of the probe on the film, apart from a small distortion.

Before a track can be followed it has to be found; at present that is done by the operator who sees the film and the probe on a screen and can move the probe about - through the computer - with the help of a steering knob and a speed pedal. No accurate setting is needed; as soon as the probe crosses a track it starts following it, rather like a bloodhound who has found a hot trail. During track following the computer continually recalculates the curvature of the track measured so far, and hence the expected direction of the next track signal, and opens the eye on each scan, in accordance with that expectation. If the track signal then is sharp and about at the expected angle, the computer accepts it,

---

* A laser gives great brightness and hence a high signal-to-noise ratio so that tracks of low contrast can be measured.

causes the probe to move in the indicated direction, and computes the next value of the expected angle. If the signal is broadened - for instance when there are two tracks very close together - the computer will cause the probe to advance by dead reckoning, at constant curvature, like a driver going through a patch of fog; or it may cause the probe to wait until another signal has been received with a different discriminating bias, or with the eye slightly moved. These routines are still being modified and there should be great scope for improvement. Actually the present routines cope with most tracks, but we hope continually to reduce the small percentage of tracks which fail to be followed. Having a small computer on-line gives us great flexibility; Sweepnik can be taught new tricks with great ease.

For measuring fiducials we have developed and are still improving a special routine. At present the operator has to set the probe near the first fiducial and press a certain button; thereupon Sweepnik will automatically measure all the five fiducials within ten seconds. It first searches for the first one, measures its two arms like two short tracks (making sure they are short, and not real tracks, or scratches) and works out the co-ordinates of the intersection; it then resets the zero of co-ordinates so that the first fiducial has a certain preset value of x and y, and then travels at high speed (about 5 inches per second, on the average) to the next fiducial (at the beginning of a film all fiducials have been measured and their co-ordinates stored in the computer). Any fiducial that can't be found is abandoned after two seconds.

All the co-ordinates measured on one view are stored in the computer memory; the output tape is punched only after the view is completed. That tape looks similar to the output from one of our manual machines, CLARA. Of course Sweepnik measures many more points, up to 150 points on one track; so the computer is programmed to group them together in bunches, never more than 14 on one track. For each bunch it computes the centroid and then applies a correction for curvature; this gives us the co-ordinates of the midpoint of a circular arc, fitted to the points of the bunch. That midpoint is then more accurate than the individual points measured by Sweepnik.

I have not brought a picture of Sweepnik because our present specimen is little more than a bread-board assembly: but it works and we shall use it to get results and collect experience. A new model is partly built and should be ready early next year. Apart from obvious improvements, like better optics and sounder construction, its view changer and a new fast film drive will be computer-controlled. By then we also hope to have pre-digitizing scan tables; their output tapes could control Sweepnik completely while the operator merely watches and does nothing unless something is seen to go wrong, or unless the machine types out some message of distress.

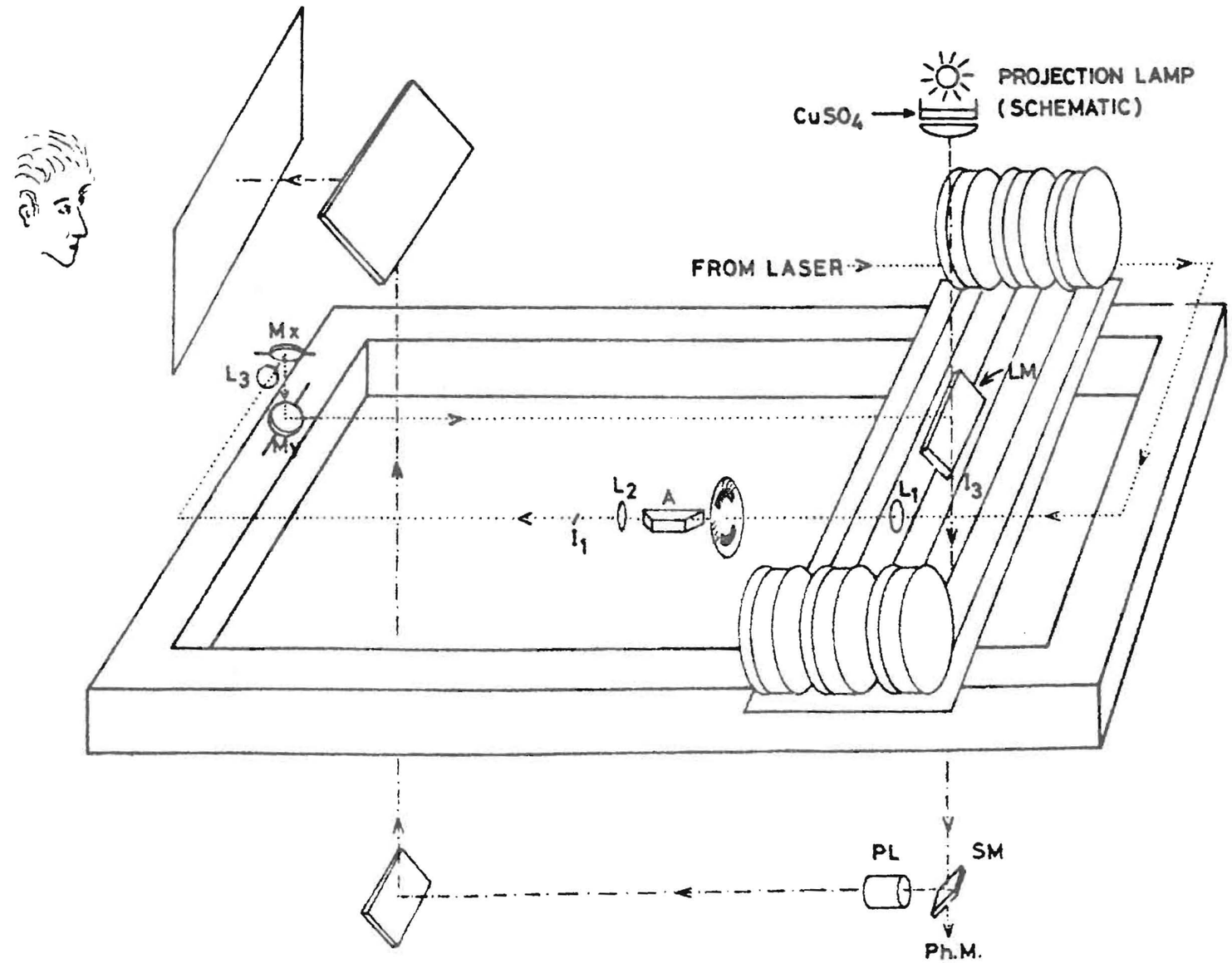
PROJECTION LAMP
(SCHEMATIC)
$CuSO_4$
FROM LASER
Mx
L_3
My
LM
L_2
A
I_1
L_1
I_3
PL
SM
Ph.M.

FIG.1

PRODUCING THE ROTATING IMAGE.

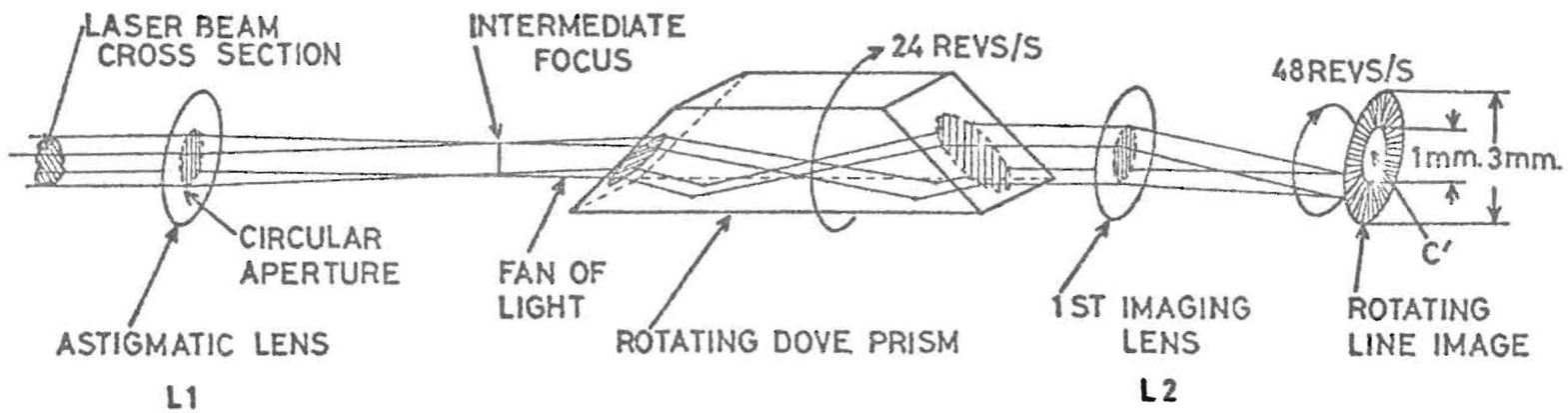

— FIG. 2 —

THE LINE IMAGE.

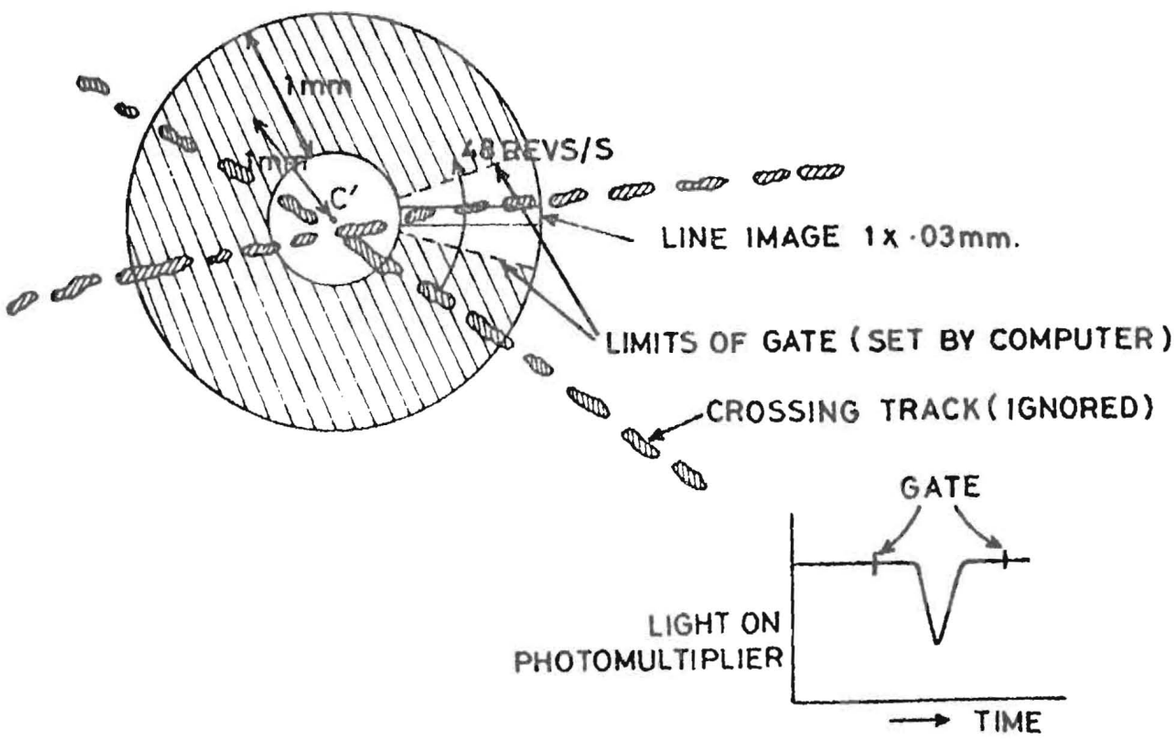

FIGURE 3

4. SWEEPNIK Performance to Date

G.S.B. Street (Cambridge)

I should like to say something fairly briefly about the performance of our machine, and discuss this under two headings, namely,

1. its reliability and speed as a track following device, and
2. its general accuracy as a measuring machine.

Although the programs are still subject to constant revision, tracks are followed well, and, especially once the computer has estimates of their direction, curvature and density. These initial estimates are sometimes difficult to obtain if there is confusion due to other tracks. But no problem arises if a clear section of track is available to start at. In this case, the machine follows the track in both directions, along its whole length. This it does through nearly all regions of confusion at about 4 cms/sec on the film plane. This speed depends a little on the quality of each individual track.

Crossing tracks are ignored, as a rule; but, trouble may arise if another track of similar density crosses at a very small angle. However, the operator is provided with an oscilloscope display on which the measured angles along the track are displayed as a function of the length measured (Fig. 4). In this way a perfectly measured arc of a circle will appear as a straight line of some slope. In practice the computer subtracts a line of roughly the same slope from the measured values and, thus small deviations from the circle show up rather well.

Fig. 4a shows the angles measured along 10 cms of a 16 GeV/c proton track. In terms of distance on the film plane, the vertical scale here corresponds to μms, where the horizontal scale is contracted 1000 x and corresponds to millimetres.

Fig. 4b shows the change of curvature due to ionization loss and small angle scatters expected for a low momentum pion of a few hundred MeV.

The photograph in the bottom left-hand corner is not of the oscilloscope display, but rather of the track signal as detected by the photomultiplier, for two very acutely crossing tracks. On the right the two tracks are just resolved, but for 180° rotation of the probe (or 2 mm away on the film plane) they have merged into one. For angles between tracks of less than a degree or so, the wrong track may be followed after an intersection. In that case a plot like that at the bottom right is obtained, and the operator would be required to take the necessary action.

Fiducials are measured reliably and with about 2 to 3 μms accuracy. An upper limit is put on the length of a fiducial arm, which allows us to filter out crossing tracks and the occasional scratches.

Including 10 secs for five fiducials on each of three views, we are able to measure 4 prong events in about 4 minutes. Actually, only about one minute is spent in measurement and the rest in manipulation by the operator. Even so, this is an improvement of a factor 3 to 4 on our conventional machines, but does not include film transport. We are building a fast film drive, so that only a few seconds will be lost. With predigitized tapes produced at the scanning stage, and some other hardware improvements, we hope to halve the time of 4 mins/4 prong event and are getting ready to do so.

We also hope to make track finding at the vertex automatic, for the simpler type of event, which will further reduce this time. Fig. 5 shows the 5 tracks of a 4 prong event (1 beam track and 4 outgoing tracks) as detected during one rotation of the probe and demonstrates that background is no problem and tracks can easily be distinguished.

And now I would like to say something about the machine's measurement accuracy. In the first place, the Sweepnik co-ordinate system is not strictly linear, and small corrections have to be made for distortions. These are never greater than 40 μms, however, over the full digitized area of 12 x 4 cms. Third order polynomials in X and Y are sufficient to reduce these errors to less than a micron or so; the coefficients are obtained by measuring an accurate square grid.

Fig. 6 shows results for events which have been processed on the Cambridge geometry and kinematic fitting programs. The Cambridge method of geometrical reconstruction is somewhat different from the Rutherford one but in order to present results in a form easily understandable by those using the latter, we have produced an index of measurement accuracy as similar as possible to that given by the Rutherford program. The upper histograms show that the indices of measurement accuracy for the Cambridge and Rutherford geometries agree rather well, for a sample of events which have been put through both programs (in fact np interactions from 2 to 8 GeV/c).

The lowest pair of histograms compare measurements made on one of our manual measuring machines, CLARA, and on Sweepnik. The same set of tracks from events of the type $pp \rightarrow pp\pi^+\pi^-$ at 16 GeV/c has been measured on both, and only those tracks with multiple scattering $\ll$ measuring errors have been taken (i.e. protons with mom. $>$ 2 GeV/c and π with mom. $>$ 0.4 GeV/c). In fact, Clara's errors are a little lower than for the neutron events but this is probably due to this particular selection. Sweepnik is still better by a factor of 2 to 3 and its errors peak at between 2 to 3 μms.

One complication arises from the fact that Sweepnik provides one point/revolution of the probe which means anything up to 100 points for a long track. So as not to overload our geometry program with excessive output, bunched points

in groups of up to six are produced. This is in fact responsible for much of the increased accuracy but with short tracks where no bunching is applied, this increase does not occur. This variation in accuracy is at present not allowed for by the geometry.

Although the following results are only preliminary we have some data on kinematic 4C fits, Fig. 7, obtained with measurements on our machine. The events have all been selected from previously fitted 4C's of the type $pp \rightarrow pp\pi^+\pi^-$ at 16 GeV/c. These were processed 18 months ago.

We find that 95% of the events passing geometry give 4C fits, but about 20% of events are still failing in the geometry stage. Actually the reasons for this are mostly understood and are largely related to bunching groups of points on slow, highly curved tracks.

The tail of our χ^2 distribution is still a bit too long, but the difficulty does not seem to lie in momenta measurements. These agree very well with the results from our conventional machines. The effect has probably two causes: firstly, the variation of measurement error with track length has not been allowed for; secondly, with our smaller measurement error of 2.5 μms it is far more important to know the chamber constants exactly. Some evidence is provided by the stretch functions which should be normally distributed with variance 1 and mean 0 (Fig. 8).

The first two distributions are for curvature and azimuth and, although centred on zero, are perhaps a little too wide, which would agree with an under-estimate of errors on short tracks.

The third distribution for dip is clearly asymetrical, which would suggest a systematic error due to incorrect chamber constants. I might stress at this point that these measurements were made on film from the CERN 2 metre chamber, which has had considerable trouble over constants.

DISCUSSION

Wilbur:

I think on your slides there was a signal to noise ratio with your machine of about 6 or 8 to 1.

Street:

No, in fact it is better than this. It was a slide taken with a Polaroid camera and then printed out of focus. It's about 20 to 1. The noise is not a fundamental limitation, it's the film rather than the laser. In fact what you see on the slide isn't really noise - it is film grain and scratches and such things. The noise is almost imperceptible.

Butterworth:

We hear of the possibility of a commercial machine appearing on the market. Should this happen is there any idea of what the cost might be?

Frisch:

About 35 to £50,000 including the computer.

Stafford:

Could you just repeat what the event rate would be on SWEEPNIK?

Street:

Well, we're hoping with the present system (merely with improved hardware and perhaps slightly more sophisticated programmes), for 2 min/four prong events. We could speed up by a factor of 2 on our automatic film drive. But more improvement might be expected if we could find tracks automatically, i.e. minimum guidance.

Butterworth:

What is the sort of size of the programme that you are currently using?

Street:

At the moment it's 5 K, but this will probably go up to fill most of the store by the time we've got the automatic film drive and so on.

Butterworth:

Is there any prospect of your getting ionisation information?

Street:

Well, we already have it - we're hoping in fact to build some gap counting logic hardware, special hardware which will use a spot scan, but in fact it turns out that many people are using pulse height and width measurements which we have already. At present we do not provide for an output of those numbers but we could easily arrange to do so.

Frisch:

I would just like to say that we were very gratified by the way the machine as a rule follows the track even through quite narrow intersections. My experience is that even at an intersecting angle of 1 degree, usually the track is correctly followed. It is only when it's rather less than 1 degree that jumps from one to the other are occasionally occurring, and then as Mr. Street told you, the cathode ray display immediately indicates a step which shows the operator that it has gone on to the wrong track.

Actually the problem is really that we tried to make decisions on the basis of each individual measurement, that is to say changes occurring within 1 mm. As soon as the programme has become a little more sophisticated this change could certainly be detected by computer and might reduce this angle to say a quarter or a tenth of a degree.

Butterworth:

Am I right in assuming that this means that you are in no way demanding that the tracks be circular? That is, globally circular. I mean are you in good shape for large chambers?

Street:

Yes, it would mean a change of the software that's all. The hardware is capable of following anything.

Frisch:

At present I think one would say we do assume that the track as a whole is a circle, we keep fitting a circle through all the measured points but the curvature is recalculated at each point and therefore small changes in curvature could be accounted for. Anyway we could write a more complex program and adjust the curve to a cycloid or whatever.

Question:

Could you say what the spot size or the line width is in the film plane?

Street:

Well, theoretically, what we hope to get for properly designed optics is 18 microns, in fact I think it's a gaussian of about 30 microns. In fact 18 microns is the diffraction limit of our optics and with the new machine the diffraction limit is 12 microns, i.e. 80% of the light is within this area.

T. Brueton:

Could you say what is the factor limiting the speed?

Street:

Mechanical, and perhaps the fact that operator interaction is still required. But even with minimum guidance, it's going to be mechanical, the speed at which it can move the spot with a mechanical control.

Breuton:

Presumably you've looked into electro-optics.

Street:

Sure, but you can't get electro-optic devices accurate to one part in 10^5.

Frisch:

May I say in defence of the mirrors, that they are very accurate and easily calculable and at the moment as I say, we move within 15 milliseconds and this is without doing anything very drastic. No part of the moving mirror has an acceleration of greater than 1 gravity, so it would be quite easy to drive the mirrors harder and increase the speed by a factor of two. That would only increase the acceleration by a figure of 4 which would still be very modest. So I think we can just, by brute force, gain a factor 2 or more.

J. Rushbrooke:

The actual time during which digitization is taking place is only a few seconds per view.

Frisch: Yes.

Question:

What is the small computer you use?

Street:

We use a PDP 7 but the production version will be with a PDP 9.

OSCILLOSCOPE DISPLAYS.

Fig. 4

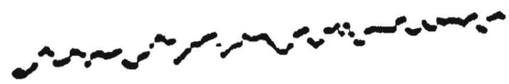

a) 16GeV/c proton track; $d\alpha/ds$ constant except for random fluctuations.

b) Low momentum track with large ionization loss.

c) Probe has derailed onto wrong track.

N.B. Vertical scale is approximately 700 times as fine as the horizontal scale. (Units of 1.5 μms cf. units of 1 mm.)

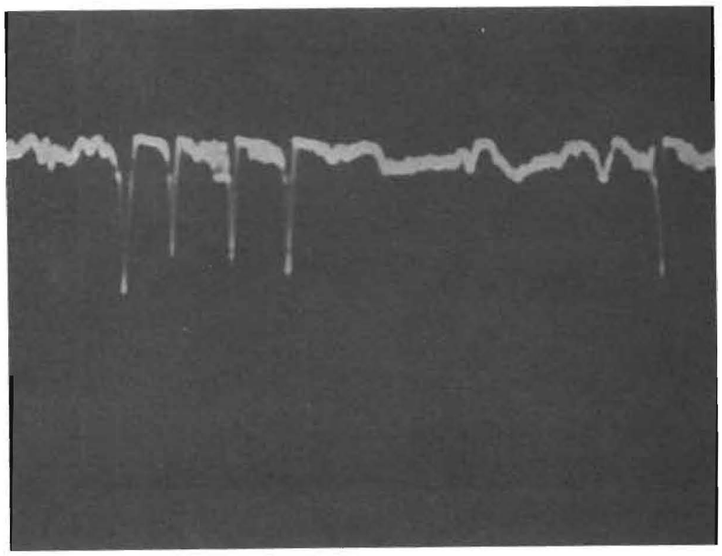

Fig. 5

H E L I X F I T E R R O R

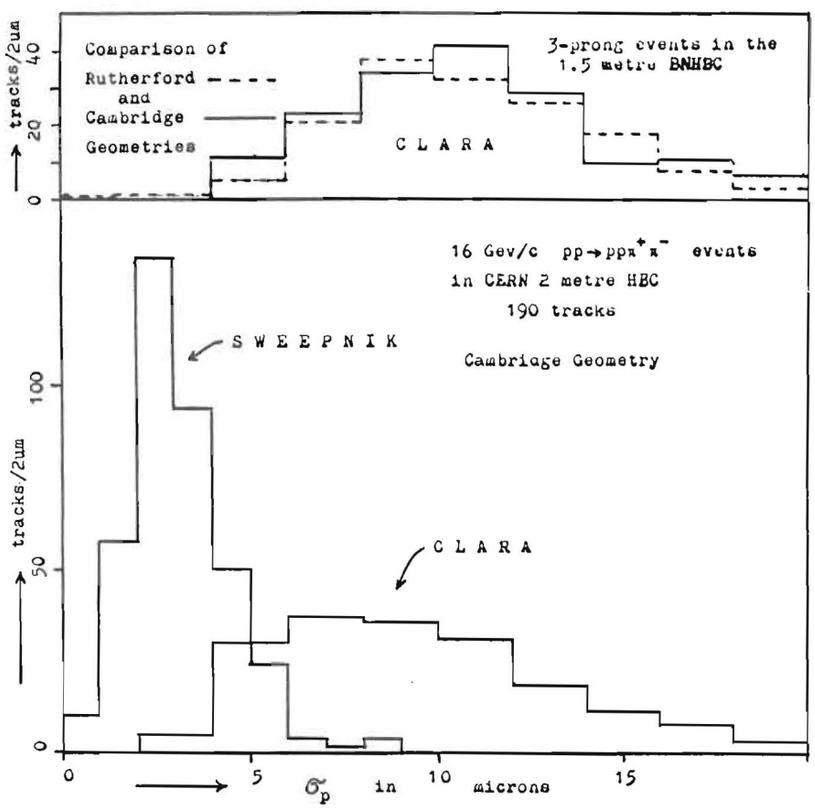

Fig. 6

Fig. 7

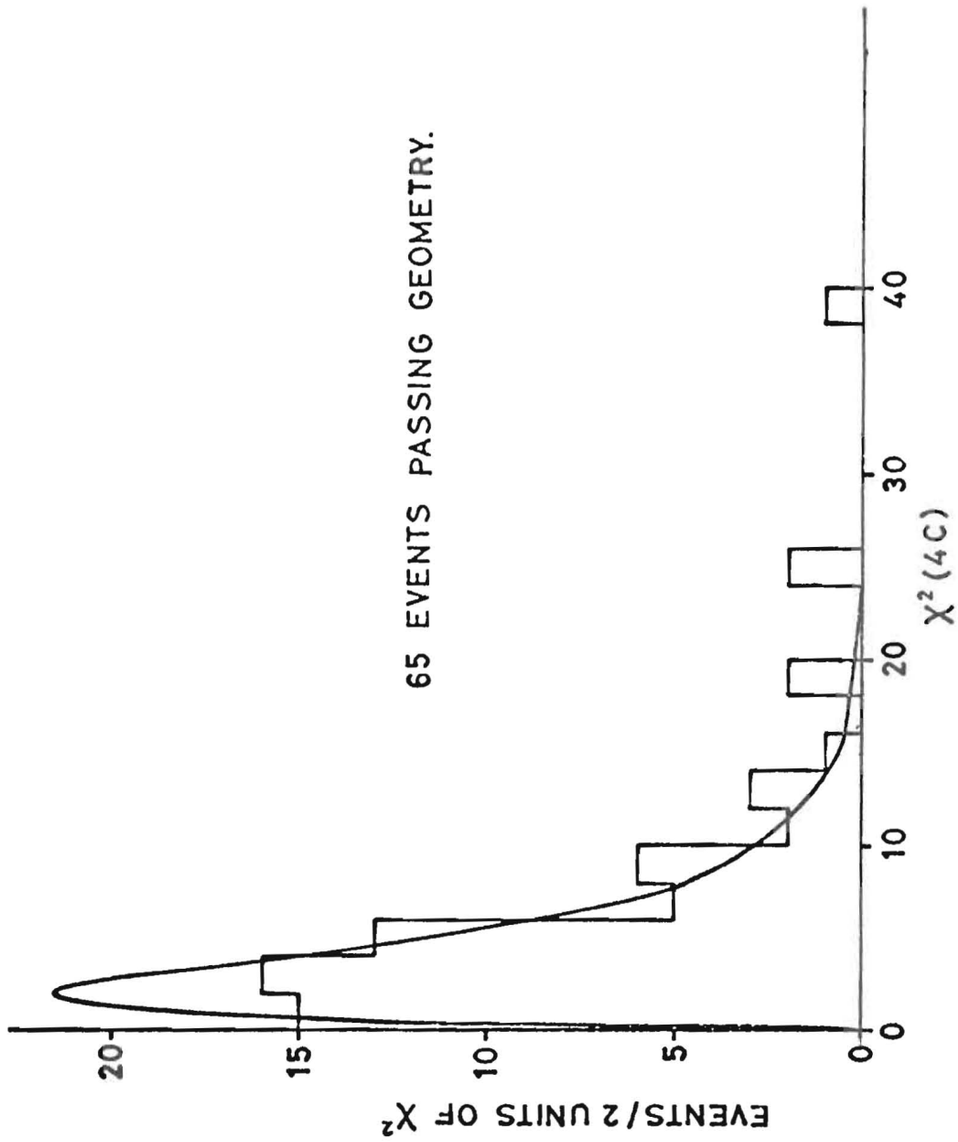
65 EVENTS PASSING GEOMETRY.
EVENTS/2 UNITS OF χ^2
χ^2 (4C)
0
5
10
15
20
0
10
20
30
40

Fig. 8

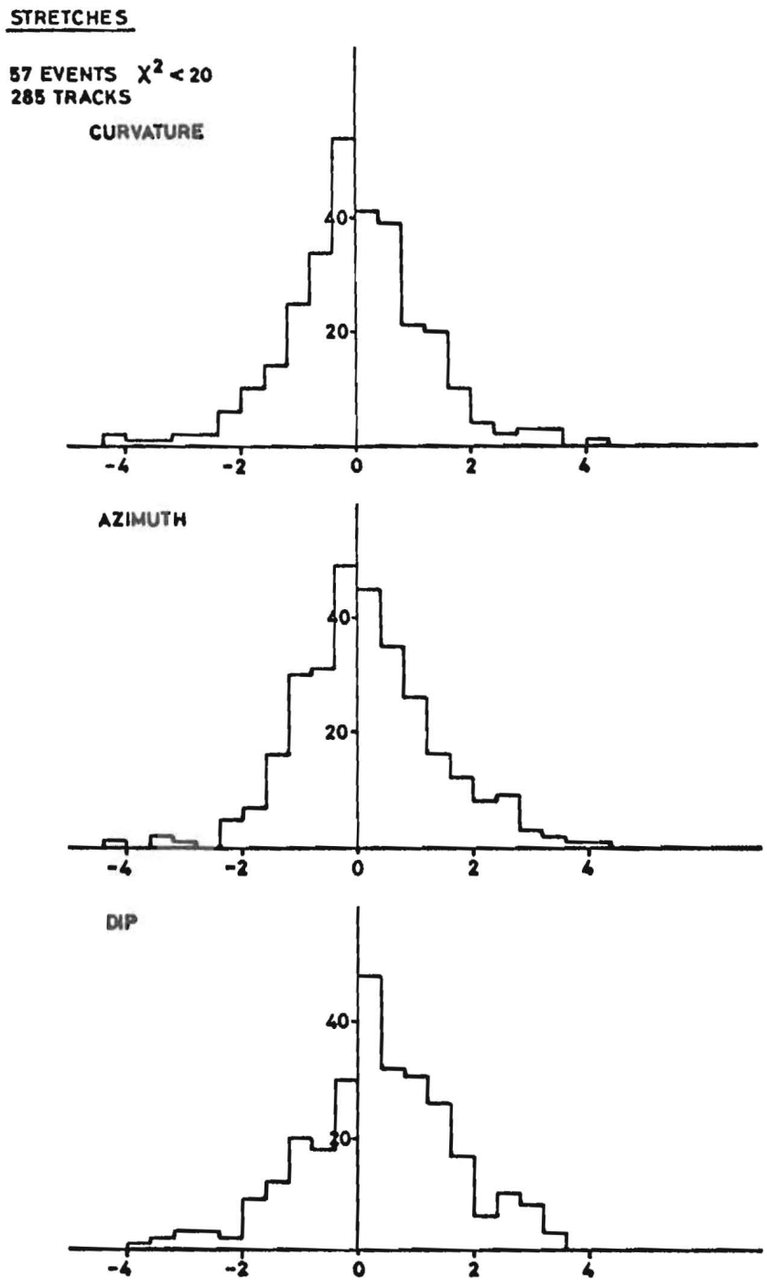
STRETCHES
57 EVENTS $X^2 < 20$
285 TRACKS
CURVATURE
40
20
-4
-2
0
2
4
AZIMUTH
40
20
-4
-2
0
2
4
DIP
40
20
-4
-2
0
2
4

5. What is Right and What is Wrong with H.P.D.

J.W. Burren

The title of this symposium is the future of measuring machines. The country has invested in five HPD measuring systems and so it is rather important to discuss the future of these machines. The immediate future is obvious; one would like all these machines to perform in the manner of the Brookhaven HPD. That is to measure some 7,000 events per week very accurately with a pass rate of over 90%. That is the program of development for the next year or so. What about the future after that? In order to assess this future I should like to make some remarks about the good points of the HPD system and also about its weaknesses.

The most important feature of the HPD is that it is very accurate. Most HPD systems have no trouble in getting good accurate measurements and as far as I know it is certainly the most accurate measuring machine in operation, perhaps even by a factor of two. What is more this accuracy can be obtained over most film format sizes. The current machines measure 50 mms x 200 mms and the machine probably, although no one has yet done it, can go up to 70 mms x 200 mms with no loss of accuracy. Perhaps I should put some figure on this accuracy, many experiments obtain geometry helix-fit residuals that peak at 3 microns. Even this 3 microns is not I think a limitation of the HPD machine, but rather a limitation of the bubble chambers. I say this because some parts of experiments give peaks at 2 microns and of course one still does not know whether this is HPD or the bubble chamber.

The second good point is that the machine is fast. The main reason for the speed of measurement is that there is no operator intervention during measurement. An HPD with disc rotating at 3000 r.p.m. a 50 x 150 mm frame is measured in about 12 secs on average (allowing for abnormal scans). In general if events are close together on the roll this time would include film movement, but of course it does not include time to change rolls. This time comes down to 7 to 8 seconds if one doubles the speed of the disc to 6000 r.p.m., which is a quite practical possibility. In fact one can say that speed of measurement with HPD is quite open-ended. There are three factors which limit the speed, one is having enough light in the spot, the second is having electronics that are fast enough and the third is the speed of the film handling mechanism. To obtain more light I think one has to look towards a laser as the light source. The electronics can be made faster by duplicating parts of the logic, that is by having more 'parallel'

operation. Film transport systems have not yet reached any fundamental limits and more elaborate engineering can certainly improve performance. However for some while I think a 6000 r.p.m. HPD will be fast enough.

Good point number three is that HPD can measure bubble density. One should be able to get as good a bubble density measurement out of HPD as one can get out of any machine.

Finally there is pattern recognition. Again the HPD system is open-ended in this respect. All the information is inside the computer - one has only to be clever enough to write a program to sort it all out in an economic time.

At this stage it looks rather good. Now what are the bad points? The first thing that is bad is the human intervention. I have said that for speed it is good to require no operator intervention. From other points of view it is very bad not to have operator intervention at the measuring stage, unless of course one has pattern recognition. In an HPD system the human interaction comes before measurement, at the rough digitizing stage, and after measurement at the 'patch-up' stage. This is rather unpleasant and gives rise to complicated logistics problems with large amounts of information having to be transferred between the various stages of measurement. In this respect the HPD system is rather poor and this is certainly one of the main reasons why it has been so hard to make HPDs go really well. Completely automatic systems are hard to make and a bit of human help would have carried many systems into production at a much earlier stage.

The second bad point is that the HPD gives the computer too much information. It does this in two respects. First there is the horrible abnormal scan. One has to scan some parts of the picture with two different types of scan-normal and abnormal - and it is very difficult to merge this information. And second the HPD does not have a line-scan, it only has a point scan. The question of random scanning as against the master scan of the HPD is not I think so important. The HPD does of course measure parts of the picture that are of no interest. However it is not too difficult to filter out this unwanted information inside the computer in a reasonably economic manner.

These are the fundamental difficulties with the HPD system, poor human interaction and too much information. Now before I talk about progress after one has achieved the Brookhaven model - viz. rough digitizing, HPD measurement, patch-up - I should like to make a digression and talk about another method of patching-up events that have been filtered incorrectly.

Now with bubble chamber pictures one is rather lucky because there is a straight-forward reliable method of checking whether a track has been measured and fitted correctly. The checking procedure is in fact the normal three-view

geometrical reconstruction. This reconstruction is highly constrained because of the three views and because the form of the track in space is known (helix with corrections). People were rather slow to realize that not only is it important to have a good method of filtering, it is perhaps even more important to have a method of telling when the filtering has really been performed correctly. I stress this point because spark chamber experiments do not have this over-constrained geometry check automatically and checks on the filtering process are more difficult. However with bubble chambers we do have the check and we can use it to gain 'statistics'. That is, suppose we have a filter program that works 80% of the time. Now if we try another method of filtering (which may be an inferior method) on the events that fail this first filter program one will save some of the events because the second filter process will treat the data in a different way. We are trying this method at RHEL and it looks as if we can save 50% of the events that fail the first filter. I should emphasize that the method depends crucially on having a highly reliable check.

To return to the main theme, as a next stage CERN, RHEL and Brookhaven are working on the possibility of pushing HPD into a minimum guidance system. In this system only one fiducial and the vertices of the event would be rough digitized on each view, together with the end points of very short tracks. With this type of rough digitizing, scanning and rough digitizing goes at about 30 events/hr. for frequent events, which is not much different from straight scanning. One should remember that at HPD installations most of the scanning devices are already equipped with rough-digitizers so no new equipment is required.

Now, what are the problems with minimum guidance? First the on-line control program has to handle more information. This is an unpleasant problem but I think it is tolerable on a large computer. Then there are two new programs to develop, a more elaborate filter program and a track-match program. We have a new filter program. CERN have been running it on the 6600 and we now have it running on the 360/75 although we have not done much running with it yet. It seems to perform quite well and takes about twice as much time as the road guidance filter program (that is on the 6600, we don't have timings for 360/75). With this factor of two the time on the 6600 is about 6 seconds per event for simple events. How good is the program? This of course depends on the performance of the MATCH program. Currently with pictures with 10 to 15 beam tracks the pass rate is about 70%, which compares quite well with a pass rate of say 80% for road guidance. If the number of beam tracks goes up to 20 and over, the pass rate comes down to about 50%. If one has a large number of beam tracks the chance of another beam track passing close to the interaction vertex is high and the MATCH program has to be rather clever to deal with this situation. However

CERN hope to start a real experiment with minimum guidance in the near future and we shall see how that goes.

I would like to end by making a general comment and that is that of course measuring isn't the only component in a bubble chamber analysis system - there are many other components. I spoke to Frank Solmitz a month or so ago and his opinion was that the Alvarez group, with its two spiral readers, no longer had a measuring problem. To do anything more they would have to look again at all the components of the analysis system, not just at the measuring problem. Certainly no British group has reached this stage, or anywhere near, but that is the position for the Alvarez group.

DISCUSSION

J. Rushbrooke:

I wanted to ask about accuracy. I have a feeling from what has been said this morning that all the initial experiments in these first three years of automatic machines have been done with low momentum beams. I wonder whether there is any better information on the performance of these machines at higher energy, whether 2 to 3 microns are obtainable with very high energy tracks, and whether we are being realistic in talking about high energy experiments in future. For this reason we deliberately chose the highest energy film we could get our hands on in testing Sweepnik, and we can definitely say that the accuracy is as good as two and a half microns for 16 GeV/c tracks.

Burren:

I don't really see that going up in energy makes very much difference. What will make the difference is the size of the bubble chamber and the size of the pictures and what is true is that most HPD experiments, except at Brookhaven, have been done on small chambers.

A long while ago, we studied how the accuracy goes with momentum in a small chamber, up to about 2 GeV/c, and it just comes down until it's flat. I don't really see why it should not go on being a constant accuracy.

Butterworth:

Brookhaven have actually run on 28 GeV/c film.

D. Miller:

The Brookhaven 28.5 GeV/c proton experiment was in fact a new experiment which more or less turned on the machine, i.e. it was the first big experiment. We achieved very good measurement and used the ionization to sort out quite a lot of the ambiguities as well as achieving reliable accuracy of measurement. It was a highly successful use of the HPD; with no particular problems because of the high energy.

Burren:

I think that there really are two different philosophies. Brookhaven, perhaps to their detriment have gone for accuracy rather than large numbers in

the first instance, and they took rather a long time, but obviously if you want to do high energy experiments that will pay off ultimately.

Butterworth:

There's one question I have about the logic of minimum guidance. It seems to me that the simplest problem you can ask the pattern recognition programme is whether a beam track interacts. And therefore I don't fundamentally understand the intermediate step of minimum guidance and why one does not firmly leap into zero guidance, as of course Berkeley are planning to do.

Burren:

I should have said that minimum guidance tends to mean a certain thing now - it means that you measure the vertex when you scan; perhaps just giving it a map reference or perhaps by putting an accurate point on it. With the HPD it's more open-ended than with other machines because if you have a minimum guidance system that works well, and provided you are only interested in beam interactions, it's not so difficult to extend this. (In fact CERN considered doing an experiment in this manner), i.e. to follow beam tracks and find out where they interact. You couldn't do such a thing with the spiral reader for instance; so these, although they have minimum guidance working, cannot be extended very far. But as to why one doesn't do the whole job at one go, some people think you should. They have not yet been successful. Whether they will be is a matter of opinion. I think my opinion and perhaps the opinion of the people at CERN is that they won't. Or at least they won't be successful in these sort of terms, i.e. be able to do the sort of experiments that Brookhaven do.

F. Harris:

If you are going to pre scan your film, then you might just as well make a map reference.

Burren:

Sure. Minimum guidance really is only scanning. Perhaps you could go a little faster if you just shouted out whenever there was an interesting event, but you can't go that much faster scanning. So when we talk about zero guidance we mean no scanning.

H. Watson:

And that is why people aren't taking the step into zero guidance, because it doesn't seem economically feasible.

Burren:

Scanning is a nuisance. If you didn't have to scan everybody would be very happy. But plenty of experimenters find that even when they start out with the idea of not scanning - as in spark chamber experiments where the information is somewhat simpler, they have, in fact, had to backtrack a little.

F. Harris:

Could I ask a technical question about the guidance system. Are you in fact processing each view independently?

Burren:

Yes.

F. Harris:

Regarding the match problem, have you looked at the Berkeley programme?

Burren:

Yes. CERN have an old programme which they've used with conventional measuring systems written by Conolly and I think they attempted to develop from that programme. We have got a programme running with our geometry programme that is much closer to Berkeley's, in fact logic is the same as Berkeley's. The actual tests are not the same because the geometry is different.

R.S. Moore:

If you start following every beam track surely the computing costs per event rise astronomically.

Burren:

I'm not sure how computing costs rise. What we know is that it doesn't rise as much as you might think in going from road guidance to minimum guidance. It rises by a factor of 2. My guess is that it might not even rise to a factor of 3 by following all the beam tracks. Obviously if you have 20 beam tracks crossing some horrible picture, then the costs would be very high, but what you will do are special experiments where scanning is very difficult. For example an experiment on small angle scatters which the HPD can see better than the eye. For this sort of experiment normal scanning is very difficult or impossible. What I'm saying is, that I don't think general pattern recognition is very important. But it is useful to do some work in that direction.

R.S. Moore:

Could I ask again about the 70% figure that CERN are quoting for the pass rate. Is this for 2 prong events because I had heard that one track in seven failed - so that high multiplicity events fail every time.

Burren:

This was for 2 prong events.

R.S. Moore:

So when you have a 6 prong you've essentially one track per view failing. Brookhaven are expecting this to happen when they go to minimum guidance. They claim that one track per view will fail and they need a lightpen to fix up every single view.

Burren:

That may be the case. If you just multiply the figures together then things look bad. However what happens is that when you fail on a track it usually fails in several views. Whenever the track measuring failures are quoted, they are always quoted in a view by view basis, and the correlation between views is not normally allowed for. Of course, this work is in a pretty early stage. I don't think anyone would reckon to use it within a year.

S.J. Goldsack:

On the question of minimum guidance, it seems to me that a lot of our present errors arise in road making. Minimum guidance will remove these human errors. There may also be an advantage in following beam tracks on this picture to eliminate the non-interacting tracks that might confuse the vertex. But I think the next step to zero guidance is very expensive because it involves scanning frames that don't have events on them. It's probably ridiculous.

Burren:

There's one bad point of pattern recognition and that is that right now the cost of computing is not falling very rapidly. It has in the past but is not now. If it were to fall again by an order of magnitude then, of course, it alters what remarks one makes about the economics. Any arguments that say computing is too expensive are likely to be obsolete in a few years because not only high energy physicists but all the computer manufacturers are trying to bring the cost down.

Butterworth:

Howard White makes a comment and he makes it seriously. I thought at the time he was joking, but it's serious. And that is if you go to zero guidance, you don't need the film anymore. You just have a good vidicon set around the chamber.

W. Walkinshaw:

I think there's a converse to that one as well, that the spark chamber people who started with no visual aid are now asking for displays to sort out hard pictures.

Apart from the cost of computing, when does the amount of computing slow measuring?

Burren:

It's not a direct problem because what people have done is to separate out the filtering operation from the measuring operation. Of course you then need a lost of off-line computing. I don't know that anyone has ever come up with a real figure of exactly how many hours on a given computer was devoted to doing a particular experiment. What is sure is that when they quote basic seconds per

event, that has to be multiplied by a lot, by at least 5 to get the total amount of computing done.

6. Polly Systems

C.Robinson

(This talk was accompanied by a film on Polly kindly lent by Dr. R. Royston, Argonne)

I had better explain that although I haven't actually seen the film, I have seen the device which helps. I am afraid the commentary will sound rather like the sound track from an Ingmar Bergmann film, largely non-existent. Let me start by sketching how Polly works. Then we will see the film and then I will go on to explain what we hope to do at Glasgow and how it differs from what has been done at Argonne.

Polly is a CRT scanning device, but is essentially different from the other devices that pretend to be semi-automatic in that it assumes that there is always an operator, the principle being that when the device was being developed the operator would be expected to do quite a lot and then as the programmes improved the requirement for the operator was gradually reduced. Nonetheless, he or she is actually there all the time guiding the device, and obviously can help with track scrutiny problems.

Fig.9 shows the arrangement of Polly I at Argonne. It is coupled to the PDP 7 computer. It consists of a precision measuring CRT, a projection lens, splitting prism and film. There is also a scanning CRT which just produces a normal television type scan of the film at all times when the precision CRT is not measuring. The beam splitter divides the light so that part of it goes into the reference multiplier and part is directed onto the film and is then collected by the signal multiplier. A signal from this goes directly onto the operator's display CRT which is being scanned in the same pattern as is that on the scanning CRT so that the operator is presented with a picture of the event, a television type picture. The reference multiplier ensures that the spot intensity on the film is maintained constant.

The principle on which the hardware works is that there is a coarse, but nonetheless, very accurate setting of the precision CRT spot to any one of 4096 by 4096 points. Having got to that point, the device can then execute what is called a slice scan (Fig.10). This is a series of parallel lines of any pre-determined length in any one of thirty-two pre-determined directions. In short, it goes to a point, draws one line, and then automatically advances without reference to the computer and draws a second line, and so on thus

generating a raster. One can programme the number of lines (the slice length). Thus one writes into the machine, the XY co-ordinate of the origin, the width, the direction and length of the slice and the hardware then reads into the computer whatever data there is to read. In addition there is an intensity control which turns up the intensity on the precision measuring CRT under programme control. The logic then is that one looks for blobs in the slice to build up a track centre. Only then is the slice orientation corrected, so that the problem of correcting to the true film reference is only done on one point from each slice.

The variation of orientation is done fairly simply in the electronics by generating a ramp, and taking appropriate fractions of that ramp, in either the positive or the negative direction, into the deflection circuitry. The ramp runs at a constant rate and running up to its maximum line length, it takes 120 microseconds. The velocity of the spot varies, with orientation but is ~ 4 metres per second. This, of course, is extremely slow compared with PEPR, even in its precision encoding mode and several problems are thereby obviated. For PEPR in its pattern recognition load the speed is about 125 metres per second, and its precision mode is about 25 metres per second.

Now the tube which Argonne used on Polly I is the Ferranti 9E71. It's the first 9 inch tube they made and Argonne are very pleased with it. They do not suffer from the problem or distortion and spot degradation at the tube edges, because although they have a 9 inch tube, they define a square window, corresponding to the 4096 x 4096 raster and 70 mm. diameter film image effectively fits in the middle of this. Thus they are only using about .7 of the tube face.

Automatic vertex finding is used. The way this works, is that, on the scan table the operator is given a very rough and ready cursor consisting of a circular disc with a ruler on it so that the distance and angle of the vertex from the fiducial is measured. This is fed, with other scan data, into Polly I, so that it searches in a 700 micron region around this point for the vertex. If no vertex is found, the operator can intervene and measure the vertex directly. Having done several frames and found perhaps that there is a consistent error in the expected and actual positions of the vertex due to an uncertainties say in the scan table magnification then the corrections are updated for future vertices.

If one looks at the hardware, then on the lefthand side of the operator there is the CRT which displays the raster scan of the event, and on the righthand side the display scope on which the computer writes. There is also a typewriter for abnormal communication to and from the PDP 7. There is a speed ball controller which the operator can use to drive a fiducial cross about and a rotating wheel with which one can orientate the direction of the slice scan manually. On the monitor CRT is produced a small marker which indicates to the operator which part

of the film is actually being scanned at any time by the computer, i.e. the position and orientation of the slice scan at any instant. Thus, if for example the computer cannot find the vertex it will say: "well here I am, where's the vertex?" and the operator by using the speed ball and the rotating wheel puts the marker back on the vertex. Similarly lost tracks can be recovered, etc. (The film was shown at this point.)

I think rates of 60 events an hour are quoted for the machine and they said in August they had measured 45,000 events this year. Extrapolating, which I never like doing, one can reasonably expect about 120,000 events per annum from the device. Residual errors after fitting a 5th order polynomial are about 1.5 microns. However when it was built a considerable amount of effort was put into selection of components, which is not a very nice feature. They even built their own EHT power supply (the PEPR ones weren't available) and they hand-selected the resistors for stability and temperature coefficient. This, I think, tends to make it rather complicated. When Polly II was built not quite so much effort was put into this and the residual errors are somewhat worse - round about $3\frac{1}{2}$ microns. They have had trouble with Polly II with temperature variation in the room in which the device was being built. Presumably when they are running twenty-four hours a day, there will be no problem.

Polly I has an 8 K PDP 7 with two deck tapes.

They broke the programme by having a compiler called Pollyglot which they originally ran on the 3600 which actually compiled their programmes as core-loads for the PDP 7. On the PDP 7 they only have the typewriter as the output medium plus the two deck tapes and one IBM compatible tape drive. Only primary vertices are gone to automatically as yet. The track width is recorded as well as its location to be used in ID estimation. They can distinguish one from 1.2.

With Polly II, the production version, Fig.11, the visual picture of the event is produced optically. The cursor, the pointer which shows the operator where the device is actually measuring, is now a stage which has a pointer on it which can be driven about under computer control with one to one correspondence between the pointer stage and the film plane.

It uses a 48K Σ7. They estimate the programme this time in Fortran will be about 24 K. The display scope is an IDI with absolute vectors. There are three racks of electronics which contain the logic both for driving Polly and for driving the IDI display. There is a typewriter plus a series of programme function keys which initiate such actions as start, stop, change to view I, II etc. There is a circular speed ball control for moving the position of the computer-drawn cross, or alternatively the position of the slice and once more the rotary

device for changing the angle. It is a very nicely designed piece of hardware.

Now just in the closing minutes, perhaps I ought to say what our proposal is at Glasgow, and how it differs from the device at Argonne. The first difference is that we must be able to scan the 2 metre chamber format and it seems to me that the easiest way to do this is simply to double the size of the scan and also double the size of the precision lens. The precision lens they use is the CERN 3 HPD lens and they are very pleased with it. The quoted performance of the CERN 3 lens is 40 cycles per millimetre, 6% contrast. Thus if one were to use a twice sized lens which Wray are quite willing to build at the modest sum of £740, one would expect a performance around 20 or perhaps a little better, but even at that one would achieve on film a spot size of round about 24 microns. This ought to be adequate for scanning the 2 metre chamber film, since the SMP has an effective 50 μ spot and gives 50% contrast on 2 m film.

In view of the varying estimates for bubble and spot sizes people make, we are making studies at Glasgow with an artificial bubble. There are going to be problems with the new ranges of chambers, when bubble sizes down to 8 microns may occur. It effectively means that one has to do something about the phosphor. We propose using the Q.4 phosphor, which is the deep blue phosphor which everyone appears to use, rather than the A phosphor which we could almost get away with at this scanning rate. (Incidentally, if our scanning size is twice as big, our measuring mode scanning speed will be 8 inches per second). One needs to await a faster phosphor.

What are the other differences? Well, we are not going to have an optical cursor. We have at Glasgow a 2250 display scope and what we hope to do is to bring up the raster scan of the whole event which will take about 7 seconds per view on to the 2250. We will then lightpen the vertex. We are against pre-digitizing because of the organisational problems involved, and it seems reasonable for the operator to pick out the vertex from the raster scan, especially as she has the visual picture of the event besides her. Perhaps the raster scan could be more concentrated over the zone containing the event. The device can go on to our 360 Model 44 which is a 256K byte machine. We propose making a partition of 128 K bytes for Polly. We have done an estimation as to what degradation this will mean to background jobs and we think it will be somewhere around 10%. It isn't too bad. Now with the raster scanning and all the other problems folded in we think the performance of our Polly compared with Argonne will be downgraded by about 10%. Hopefully, one ought to achieve about 100,000 events per annum. The 2250 display routines, have already been developed at Birmingham for the 360/44 from basic IBM packages, so hopefully this will create few problems.

Control and pattern recognition work will be directly copied from Argonne with the exception of the input output drivers themselves, obviously the hardware will be different, but we are reasonably confident that we shall succeed in doing this. The only other question is the 2250 - the IDI scope Argonne use has a resolution of one in 4096 by one in 4096 and it has absolute vectors. The resolution may be a problem but apparently IBM supply all the hardware to give one in 4096 by one in 4096 resolution. They just omit the line drivers to the deflection coils, so it is apparently quite an easy job to convert it to one in 4096 by one in 4096.

DISCUSSION

Street:

What is the least count, measurement accuracy and useful area?

Robinson:

Least count is 4 μ with 16 μ between grid lines, the useful area is about 64 mm squared. The actual accuracy I can't give you here and now.

Butterworth:

Why don't you plan to use the SMP's for vertex definitions?

Robinson:

They would be expensive. If we demanded rough digitizing one would do it on a measuring scan table. The feeling is that we want to avoid it if possible. Once one admits the possibility of the operator there, I don't think it really takes much longer for the operator to pen in the vertex.

Oxley:

How efficient do you think scanning will be with the lightpen?

Robinson:

Our intention at present is to pre-scan the film.

Rushbrooke:

How much does it cost?

Robinson:

Quite a lot. Actually it's the first realistic costing I've seen for any laboratory where they actually folded in such things as the design and development costs and it came to something like £110,000 without computer. The amount estimated for building ours at Glasgow is £22,000. But of course we already have the 2250 which they of course included in their estimate and they included all the design and development costs while we just lift circuit design from Argonne.

Harris:

Wasn't there some question of Astrodata marketing Polly?

Robinson:

Yes, I had a letter from them saying that we understand you are interested in Polly but I don't think anything is coming of it.

Harris:

I believe they market at PEPR at $ 160,000 presumably Polly would be somewhat cheaper in view of the slower sweep and since less stability is aimed at.

Robinson:

The Argonne estimate is rather excessive because it puts on to one machine all the development costs. The problem here is the IBM 2250. If anyone was actually to consider buying the Polly using the 2250 display, then the cheapest model is something like £40,000, which of course makes it ludicrously expensive. One might buy an IDI one which is $ 28,000. It doesn't have an internal buffer.

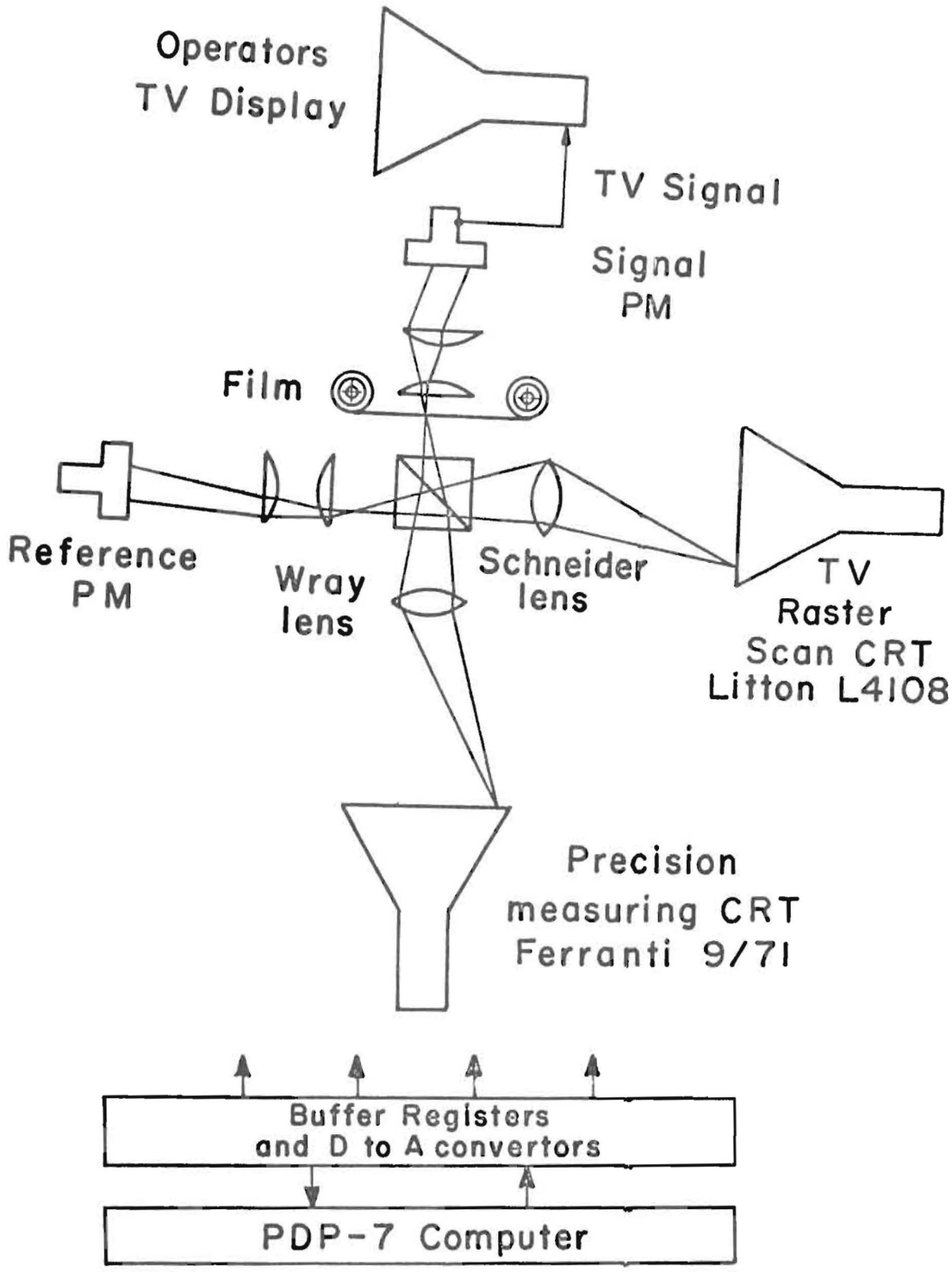

FIG. 9

Block diagram of the Polly I Optical System

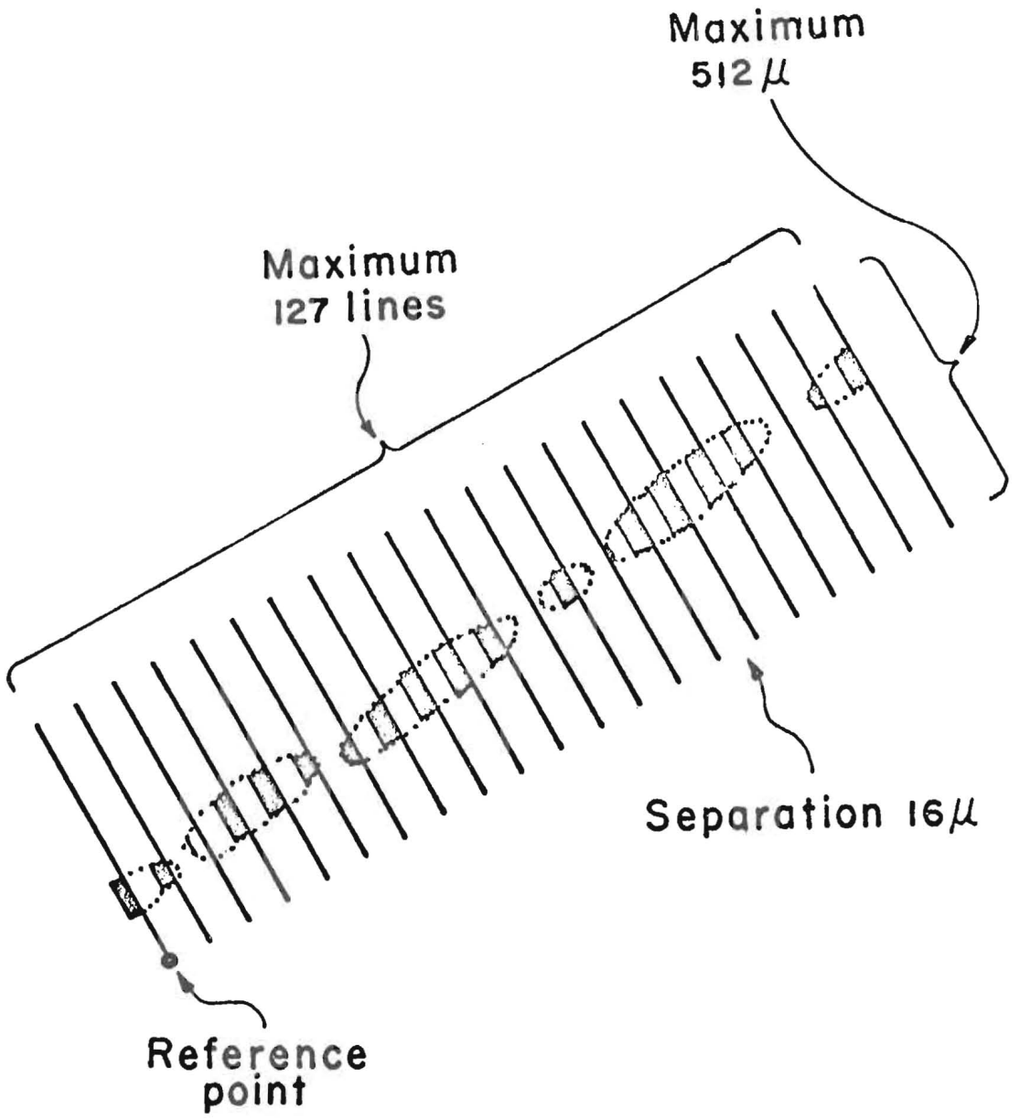

FIG.10
Polly I Slice Scan

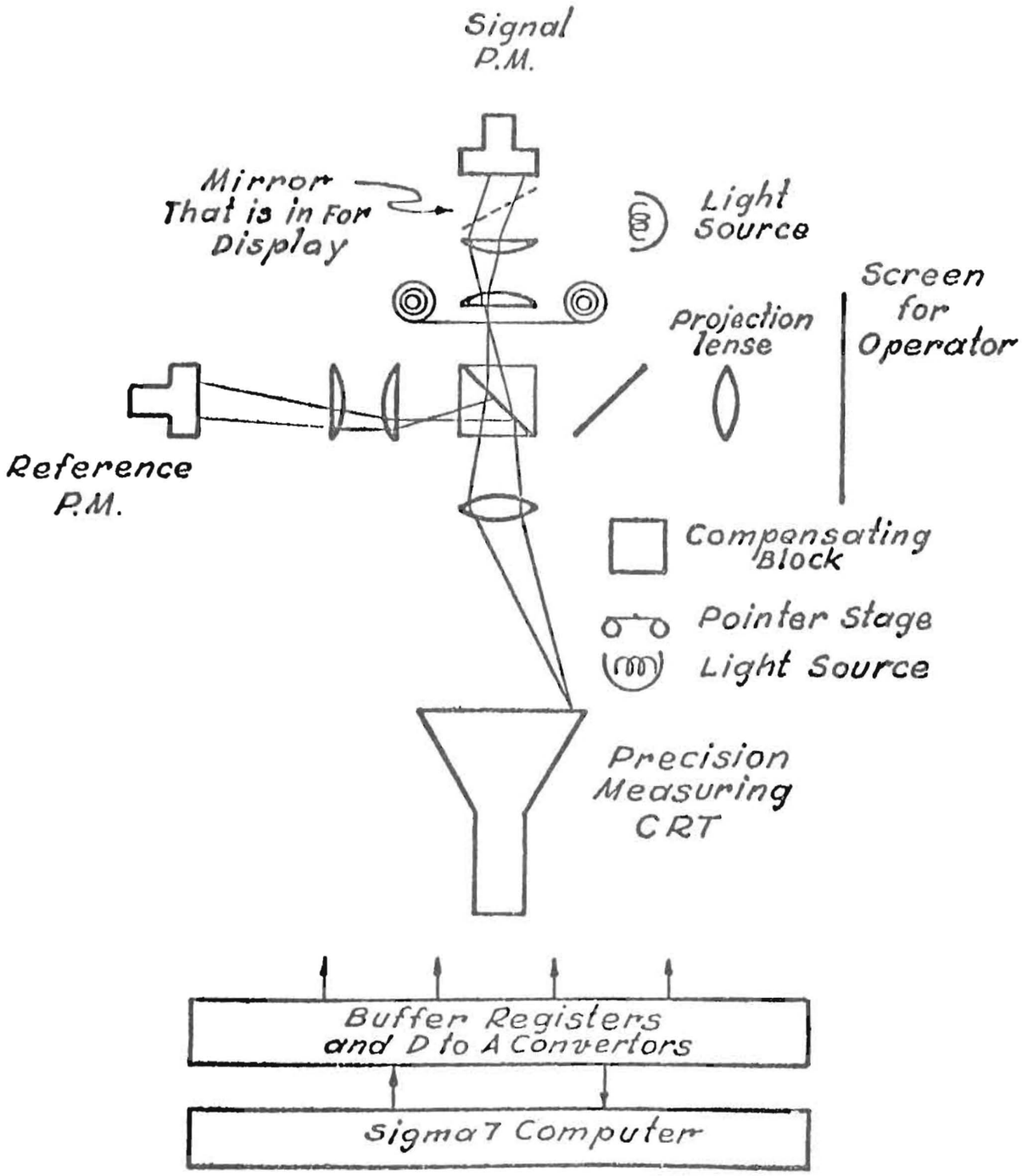

FIG.11

POLLY PRODUCTION VERSION

SESSION II

Chairman: J.W. Burren

7. Bubble Images in the New Chambers

W.T. Welford, Imperial College.

We can assume that the new chambers will all have bright-field illumination with Scotchlite since this is the only system which has been proved to be practicable. Under these conditions an optimistic guess at the form of a bubble image is obtained by treating it as an incoherently illuminated opaque disc of size comparable with the resolution limit of the optical system. A few such images have been computed for the case of an in-focus, aberration-free optical system (W. Weinstein, J. Opt. Soc. Am., 45, 1006-8, 1955; S. Slansky, Revue d'Optique, 39, 555-77, 1960) and other calculations have been made from which it is possible to deduce the contrast at the centre of a defocussed image (E. Wolf, Proc. Roy. Soc., 204 A, 542, 1951). Unfortunately there are no calculations of defocussed disk images as a whole, but from the above references and from general considerations it is possible to predict the general character of the images. It turns out that in order to get reasonably good contrast the focal range is such that the apparent width of the bubble image is fairly easily predicted; thus the following discussion refers mainly to contrast; image width is dealt with rather briefly.

The causes of varying image contrast may be summarized qualitatively as follows. The imaging properties of the system up to but not including the emulsion depend essentially on the object space geometry, i.e. on the radius a of the entrance pupil and on the distance R of the bubble from the pupil. If the bubble is at the position which is geometrically in focus the image obtained depends on the ratio of its diameter to the resolution limit of the system, i.e. to some length of the order of the Airy pattern. If this ratio is less than unity the bubble intercepts a small amount of light from the bright background but this is spread by diffraction at the lens into the width of the Airy pattern, so the centre of the bubble image is not dark, i.e. the contrast is poor. If the ratio is greater than unity the image has good contrast and approximates to the object but with blurred edges. However, a bubble which is large in this sense if it is near the cameras may be small if it is remote from the cameras, because it subtends a smaller angle; this is independent of questions of focus. Thus a bubble of given actual size may be resolvable, i.e. have good contrast, only if it is near the

camera. Defocussing adds further to lack of contrast; for a non-resolved bubble the effect of defocus is to decrease the contrast relative to the in-focus image in well understood ways; if a bubble is well-resolved the first effect of defocus is that the contrast stays constant but the image broadens, but with further defocus the contrast also drops.

For a quantitative treatment we have to define some more symbols. Let R_o be the distance from the pupil for which the lens is focussed, let ρ be the bubble radius and let λ be the wavelength of the light. We use a dimensionless parameter ν to measure the lateral dimensions in the image;

$$\nu = \frac{2\pi}{\lambda} \frac{a}{R} \eta \qquad (1)$$

where η is actual radial distance in the object; note R is actual object distance, not R_o; also all these are measured in chamber space, i.e. corrections must be made for fish-eyes and hydrogen. Then a value $\nu = 3.83$ corresponds to the radius of the first dark ring in the Airy pattern. Fig.12 shows how bubble images in focus appear, the radii of the bubbles being respectively 1, 2, 3 and 4 ν units; the results are taken from the first two references above, and from these we can find the in-focus image of a bubble if its size falls within these ranges. For example, in the high field chamber possible values would be $R = 1300$ mm, $a = 1.25$ mm (for a lens at about F/16), $\lambda = 0.6 \times 10^{-3}$ mm and $\eta = 0.1$ mm (0.2 mm diameter bubble), giving $\nu = 1.0$ and an intensity at the centre of the image of 0.8 relative to unit background.

For defocussing we use another dimensionless parameter, u defined by

$$u = \frac{2\pi}{\lambda} a^2 \left(\frac{1}{R_o} - \frac{1}{R}\right); \qquad (2)$$

(this is equal to twice the difference of phase between the centre and edge of the wave arriving at the pupil relative to a wave which is in focus). The complete image of a bubble (opaque disc) is unity minus the convolution of a circle with the image of a defocussed point; while this has so far not been computed, the third reference gives the light flux contained within different circles round the defocussed point image and these values are, suitably normalised, equal to the value of the convolution at the origin, so that we can obtain the central intensity in the image. Fig.13 shows this central intensity as a function of the defocus parameter u for bubbles of radius $\nu = 1, 2, 3$ and 4.

By interpolation from Fig.13 we can now plot the central intensity in bubble images of various sizes as a function of actual distance from the pupil in a chamber. Fig.14 shows what might be expected for the high field chamber. The

two F/ratios are approximate; they correspond to values of pupil radius a of 1.25 and 2.5 mm in air and wavelength 0.6 μm in air. The geometrical focus is taken as 1.3 m from the pupil and the fiduciary volume extends from 0.8 m to 1.8 m. Fig.14 shows the great influence of bubble size on contrast; it is clear that better uniformity of contrast with depth is obtained at F/16 than at F/8 but the actual contrast at F/16 of the 0.2 mm bubble is rather poor even in focus, whereas the 0.5 mm bubble has reasonable contrast at all distances. The effect of opening the aperture can be clearly seen as improving contrast in focus but worsening it out of focus. The curious effect can be seen that in some cases the maximum contrast occurs nearer the pupil than at the geometrical focus. This is because the drop in contrast due to defocus is more than compensated by the increase in angular subtense of the bubble, so that it becomes "more resolved".

Fig.15 shows for comparison similar graphs for the Argonne 12 ft chamber, assuming the same bubble diameters. The effect of the greater depth is that it is impossible to get good contrast at the end remote from the lens with any aperture setting, with the bubble sizes assumed. If the focus is moved out beyond the setting chosen (1.5 m) the result is that bubbles near the lens give worse images.

The above discussion ignores the effect of the photographic process and also the effect of non-uniform exposure over the field due to lens vignetting and variation of Scotchlite angle. Experimental evidence suggests that very contrasting film such as Microfile will have to be used, with gamma about 4, and it will therefore be essential to use an equalizing filter near the focal plane to keep the background density uniform and near the foot of the characteristic curve. If this is done there might seem to be no reason why good images could not be obtained even from small bubbles, since the high contrast film will turn a central intensity of 0.95, say, into a central transmission relative to background of 0.8. However, it is not known how accurately the equalizing filter can be made nor how constant the angular distribution of the flash tube light will be. It is known that in existing chambers which use Scotchlite illumination the thermal turbulence in the liquid contributes appreciable background variation, as in e.g. the Stanford 1 m chamber. This means that, while the equalizing filter produces a nominally uniform background, thermal turbulence either increases the background so that it moves up the characteristic curve and there is over-exposure in the bubbles, or it decreases the background and contrast is lost.

To summarise, the two things which help to give good contrast are large bubbles and small chamber depth.

DISCUSSION

Question:

What will be the shapes of tracks in these chambers?

Welford:

There were some computed examples done here for the High Field Chamber with various geometries, parallel lens axes, included axes with and without barrel distortion. At Argonne this summer we looked at the scan table at three single events computed for these different geometries. These effects are relatively unimportant compared with the effect of the large stereo angle, and the conical projection. They are rather alarming to look at but everybody at Argonne eventually talked themselves into believing that there was no problem in using them.

Butterworth:

Are there any further estimates about spatial positional accuracy in the 12' chamber?

Welford:

Well, we think the bubble image in focus will be about 10 microns in size and in the worst situation about 30 microns. We don't know what the thermal turbulence is going to be like. I think everybody's giving up worrying about that and are waiting the full scale experiment.

Butterworth:

What about holography?

Welford:

Well we've got an interest in holography at Imperial College. So far the situation is that you can make holograms of chambers. We've got as far as doing this on mock chambers. We've got a light which seems to have adequate coherence length to do this. It hasn't got at the moment enough energy but we think this is possible. The situation now is that certainly it's possible in principle but it's a long way from that to making it an engineering possibility. If you say, let's really engineer this, you've got a big measuring problem because PEPR or HPD or any other device wouldn't measure a hologram. So any measuring machine for hologram-type pictures in fact would begin to look something like a Frankenstein with an extended coherent source. There doesn't seem to be any escape from reconstructing the picture with a coherent beam. Of course this certainly does solve these problems of depth of focus. I think it wants thinking about from the systems point of view, whether this is really worthwhile, whether you don't do better to elaborate your advanced measuring machines to cope with the sort of thing

we've seen rather than doing pretty things with holography.

Colley:

I was intrigued by your belief that you will see individual bubbles. Has any estimate been given of how useful ionisation density will be in these large chambers?

Welford:

I don't know.

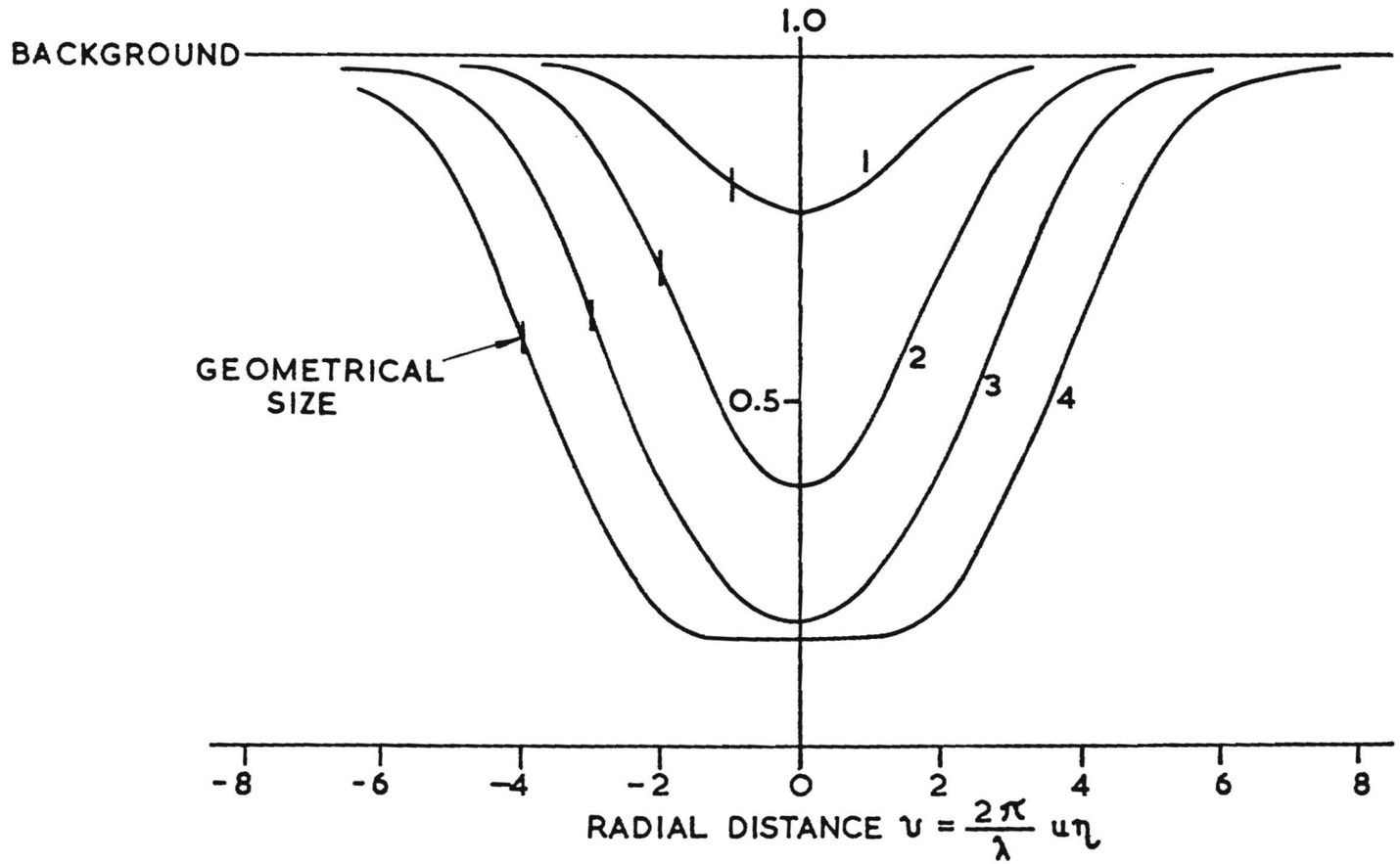

BRIGHT-FIELD BUBBLE IMAGES

Fig. 12

deciding which track corresponds to which in different views, and could mean that track matching will be a more essential feature of future reconstruction programs than has heretofore been the case.

Apart from the obvious expansion of current programs to cope with the increase of data arising from the multiplicity of cameras, various other "organisational" problems come to light when one starts to consider analysis of large chamber film. For instance, it will frequently be the case that different tracks from the same vertex will be best measured in different combinations of views, and in general one must expect each track segment to require treatment as a separate "event".

A problem peculiar to Gargamelle, but by no means so acute in other large chambers, is that of "distribution" of events (and tracks) over several views. This is brought about by the inability of any one lens to see the whole of the sensitive volume. In fact, only a very small part of the total volume is common to all 8 images. Thus one must envisage a necessity to "bridge" tracks from view to view in the process of getting total range, and also the necessity to associate neutral decays seen only in one set of views with vertices seen only in another set. The latter effect will be particularly evident in the pointing back of γ-rays to origins in the heavy liquid.

In addition to the above problems brought about by the geometry and size of the large chambers there are, of course, also the special features of heavy liquids e.g. optimum length for dip and azimuth, kinks, electron momentum measurement etc., which must be included in a complete analysis program. These features are not necessarily best located by the methods currently employed. For instance electrons will, in general, have a greater potential path in Gargamelle than in a smaller chamber so one can envisage using the information carried by the detected bremsstrahlung to make a more accurate determination of momentum than has previously been possible.

It was decided very early by the LBCG collaboration that there was no future in attempting to adopt any of the existing programs for use with the new generation of chambers. Indeed, any form of adaptation would have resulted in an essentially new program anyway. We have therefore tried to take a complete new look at the problems of geometrical reconstruction, and the peripheral problems of calibration, and the generation of realistic test input. The collaboration works in close contact with the chamber builders so that the maximum amount of feedback can occur. The specific problems considered and, at least partially solved, can be grouped under the following headings:

lens calibration
chamber calibration

generation of artificial measurements
structure of data storage
retrieval of near corresponding points.

The work of the LBCG collaboration is extensively documented in a series of Information Notes available from DD division CERN.

Lens calibration

The Gargamelle lens is ~ 2 m long and has 37 spherical surfaces. The film gate imprints fiducials on the film and it is proposed to derive the transformation from points on the film to rays in space with respect to this internal fiducial system, by calibrating each lens separately on an optical bench. The procedure will be similar in many respects to that proposed by Prof. W. Welford for the Argonne Chamber lenses. Unfortunately the way in which the lenses are mounted on the chamber (attached only at the fish-eye end) means that the calibration may have to be corrected for a lens in operation due to the possible sag over its 2 m length.

Chamber calibration

The chamber fiducials, and the lenses are attached to the cylindrical chamber body. Calculations show that due to thermal changes, magnetic field, pressure in the chamber and weight of liquid the positions of the fiducials and lenses may alter by a few millimetres between chamber empty and cold to chamber full and hot with magnetic field on. The angles of the lenses can change by ~ 5 m rads. From expansion to expansion the variation is expected to amount to perhaps 7/10 of these figures. Calibration (to any degree of accuracy) under these conditions is, of course, impossible and we have arrived at a compromise with the Gargamelle builders whereby some fiducials will be provided which are visible from both inside and outside the chamber. These can then be accurately surveyed and monitored during chamber operation. A new calibration program, based on a method originally proposed by Negri of Milan, has been written and will use measurements on any corresponding point in the chamber i.e. bubbles or fiducials. The parameters of the optical system derived by this program lack only a scale factor and this can be supplied by the camera fiducial.

Generation of artificial measurements

A program, VAT 68, running on a CDC 3100, generates tracks in any chamber geometry, projects them on to the film and then displays these images at a CRO display console. "Measurements" of the track are made by light pen, measurement errors being superimposed on the co-ordinates obtained, and then output in the proposed input format for LBCG. The track parameters can be altered at will whilst the image is displayed so that the most awkward tracks can be generated and measured.

Internal program structure

The philosophy of LBCG has been to accept that, whilst it is to be basically an off-line program, most large chamber users will have some or all 3-dimensional reconstruction on-line. We have therefore felt bound to construct the basic framework of the programs in such a way that the problems of on-lining it will be eased. However, we do not intend to make any concessions to on-line operation which would jeopardise the efficiency of the program off-line. The proposed internal structure will be completely dynamic, being made up of linked blocks which can be stored in one vector in any order, or indeed can be kept on backing store. This structure is an extension of the input format proposed originally by Burren and Moorhead for HPD and Minimum Guidance usage, and also owes much to the semi-dynamic data structure currently used in Mass Dependent THRESH.

Near corresponding points

As a start to surveying possible methods of track reconstruction the THRESH method of finding near corresponding points in space to measurements on the film has been modified so that tracks with cusps and loops can be dealt with. This is achieved by approximating the projection of the track, on a plan perpendicular to the field, by a sequence of circle segments. Each circle is determined by 3 points. Cusps and loops are detected by examining the angles between chords. For the purpose of interpolating to a near corresponding point the circles are chosen in such a way that the rate of change in the radius is made as small as possible, and that they lie either to one side or the other of a tight loop or a cusp. The results from this method have been extremely encouraging. Typically, for a stopping muon in propane $\sim 85\%$ of the measured points can be associated with near corresponding points in space, the deviation of these reconstructed points from their true position (as provided by VAT 68) being $\sim \pm$ 0.5 millimetres. The range of these tracks can usually be retrieved to better than 1%.

Status of LBCG

Coding of the program has started and it is planned to build as far as the near corresponding point method above. Using this, we shall attempt to investigate as many fitting methods as possible before specifying the definitive form of the program. It is hoped that the first version of LBCG will be available by the end of 1969. Examples of tracks so far dealt with are shown in Fig.18.

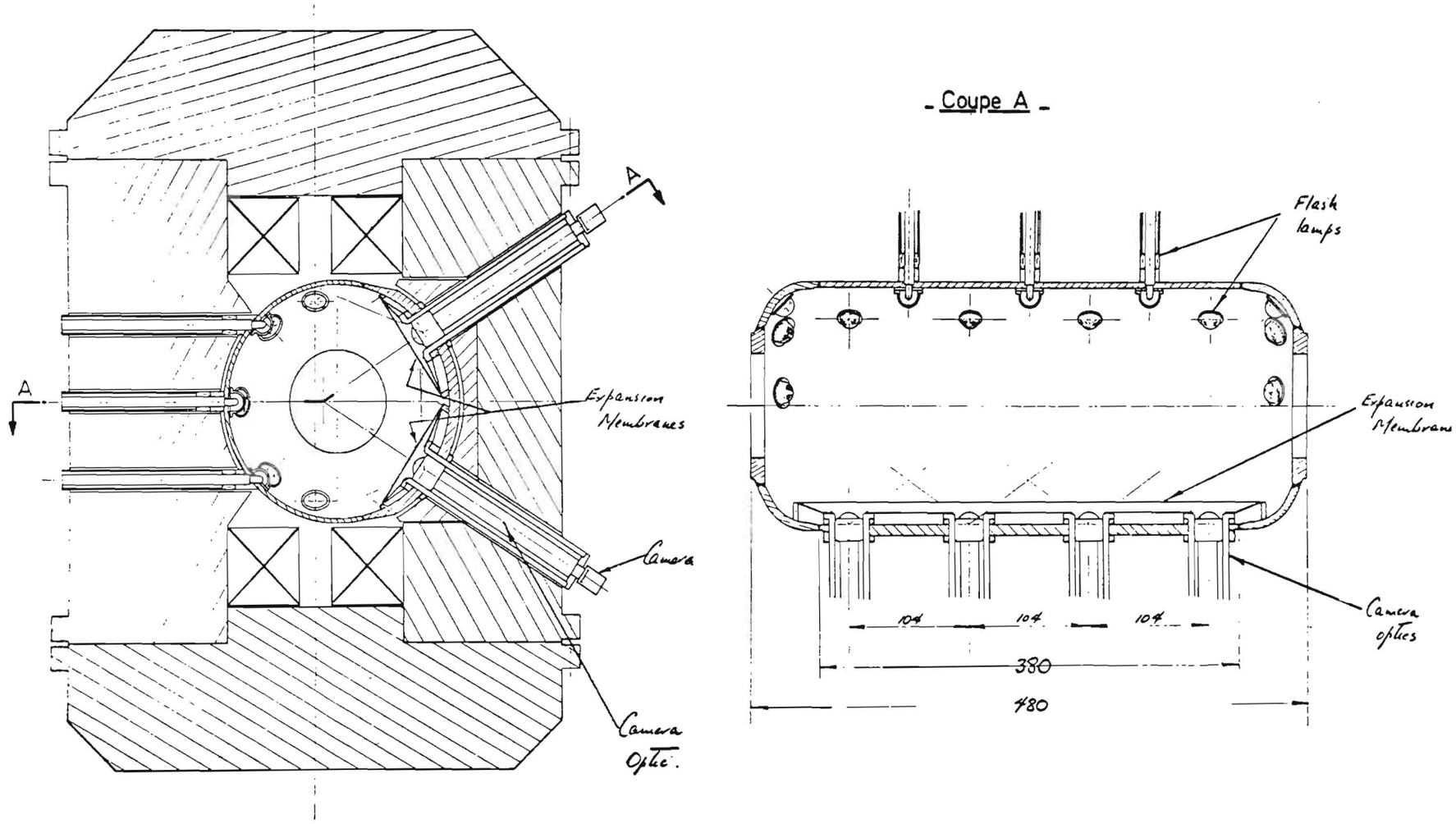
A
A
Expansion Membranes
Camera
Camera Optic.
- Coupe A -
Flash lamps
Expansion Membrane
Camera optics
104
104
104
380
480

Fig. 16a

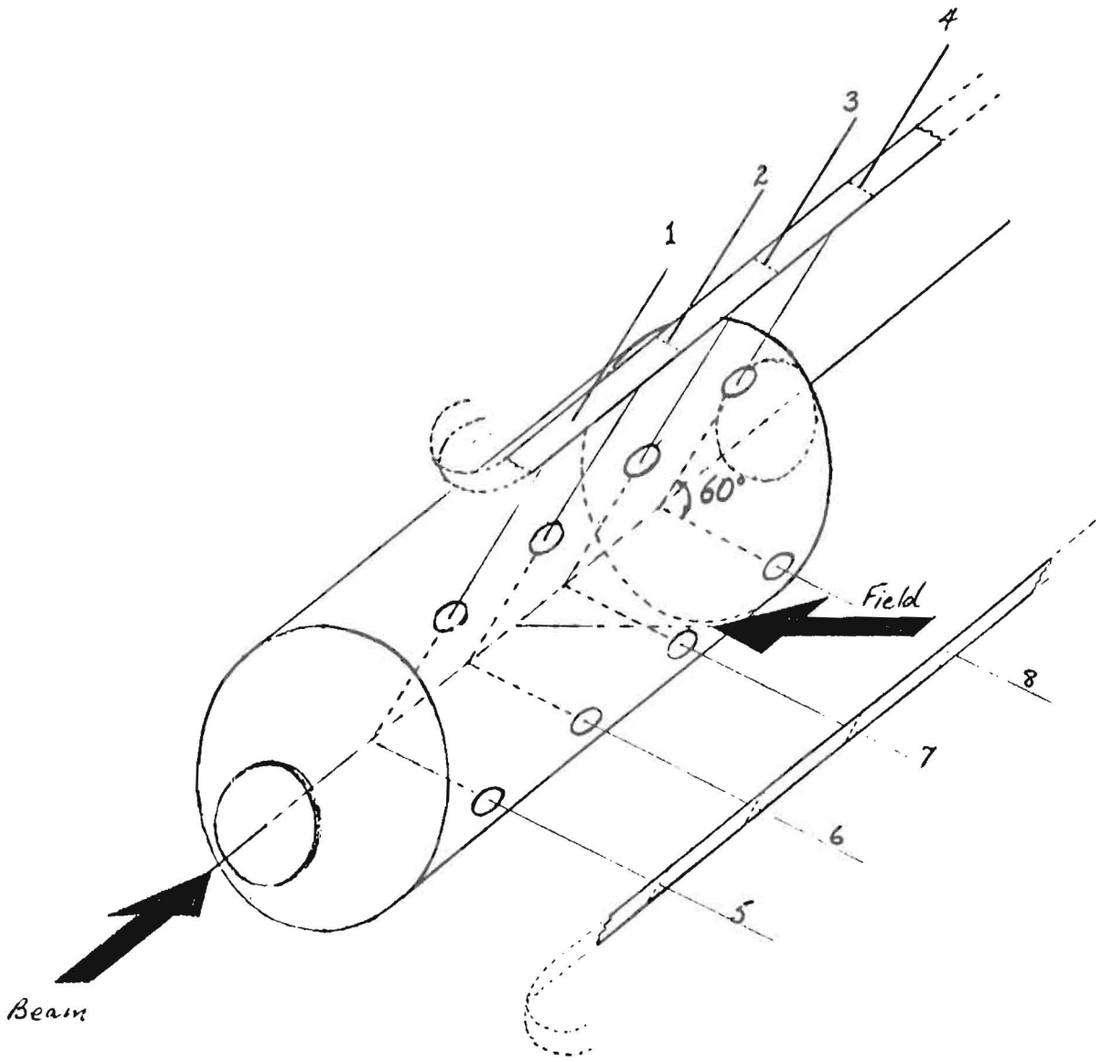

Fig. 16b

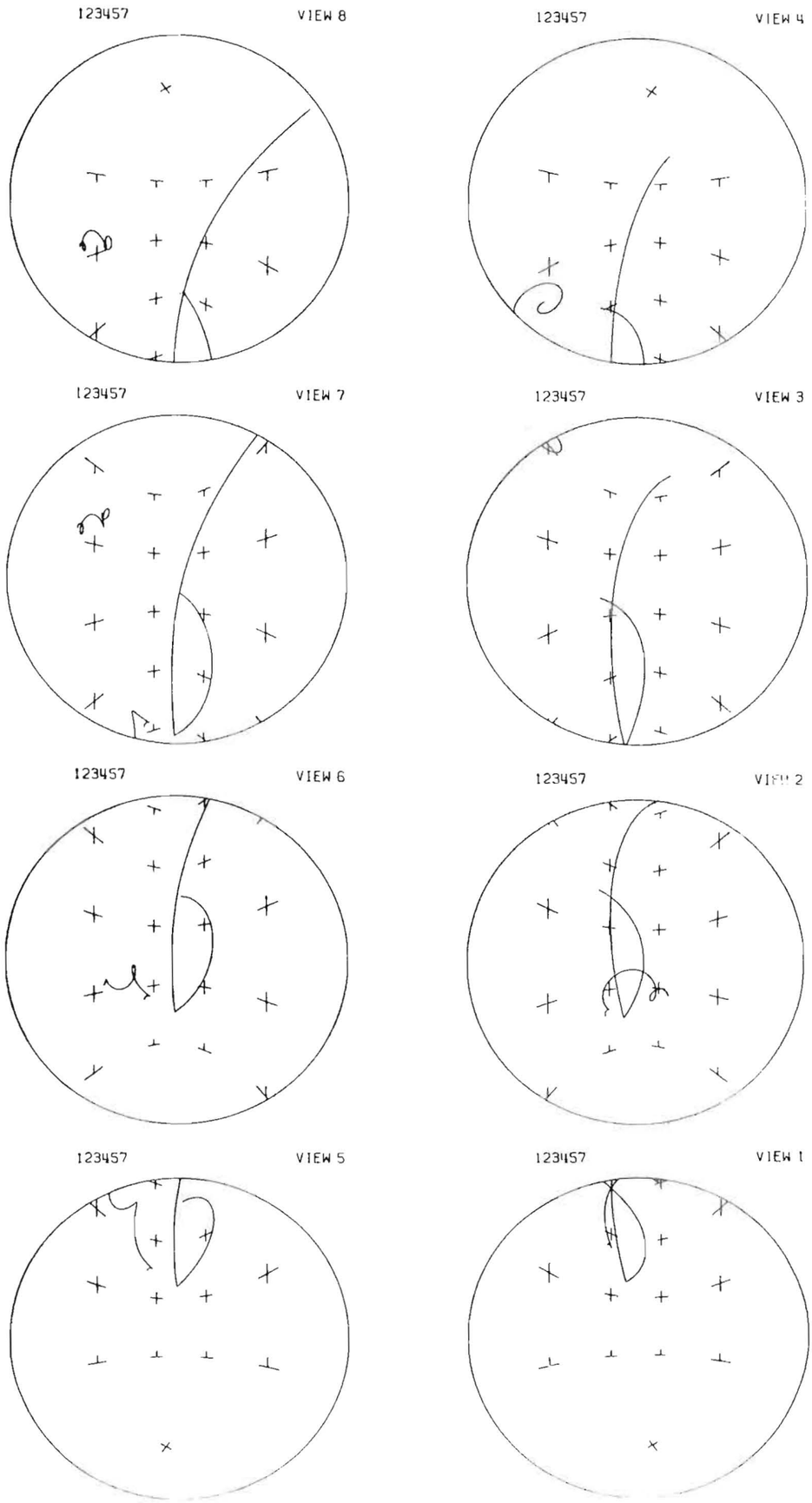
123457
VIEW 8
123457
VIEW 4
123457
VIEW 7
123457
VIEW 3
123457
VIEW 6
123457
VIEW 2
123457
VIEW 5
123457
VIEW 1

Fig. 17

Figure 18

Track 6

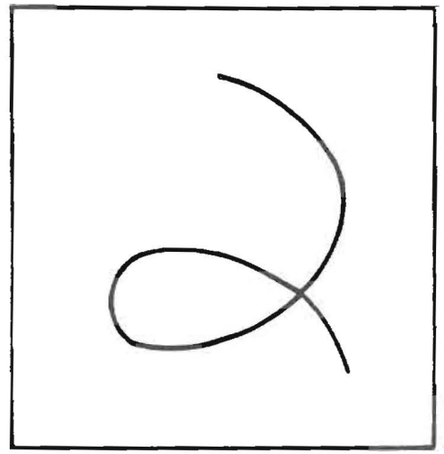

View 2

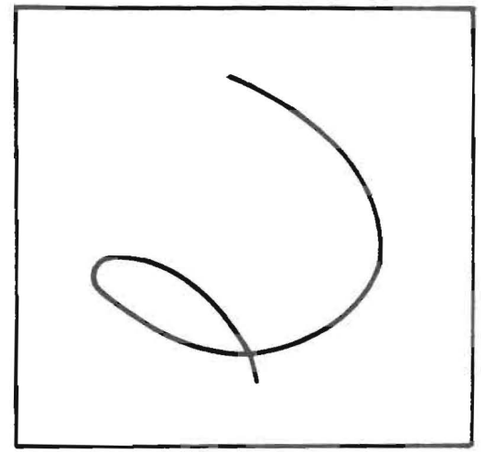

View 3

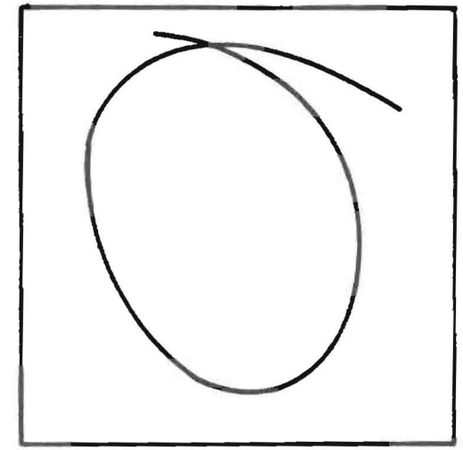

View 6

Track 19

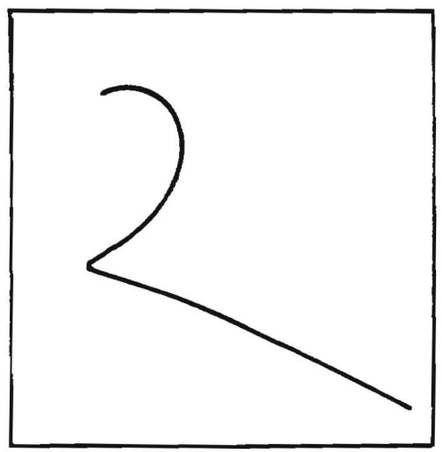

View 2

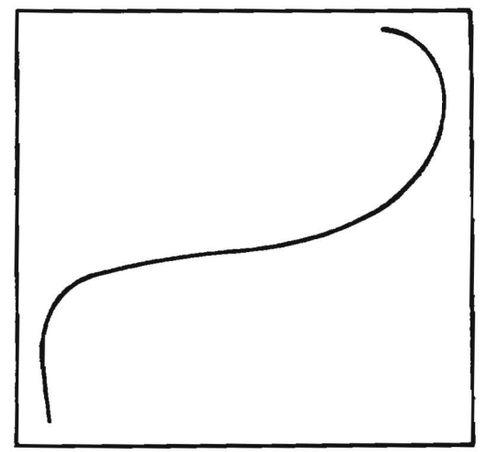

View 3

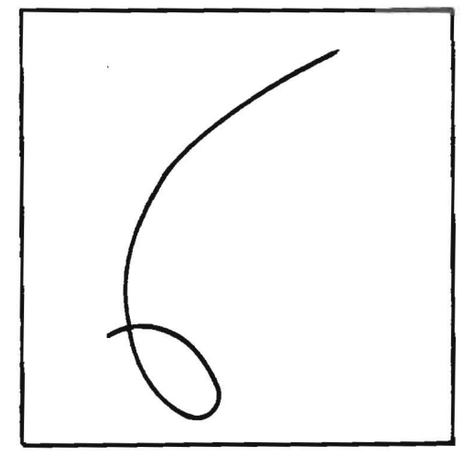

View 6

9. Precision of Optical Constants of 12 ft. Argonne Chamber

W.T. Welford, Imperial College.

The stability and precision of optical constants has always been a major consideration in the design of the chamber and the following factors contribute:

1. Camera lens.

This is as short as compatible with optical requirements, (about 15 cm overall) to give mechanical rigidity of the mount. The lens components are epoxied into metal cells and the cells are afterwards skimmed to re-center the elements. The set of elements are mounted in a plain barrel, diamond turned to ensure a close fit. The mount has a locating surface at the rear to represent the image plane and the elements are adjusted as a whole to give exactly this focal setting; the vacuum platen comes up against this surface with 125 μm clearance to allow for film thickness. Four fiducial projectors are set into the mount to give camera-based fiducials just outside the frame area. The lens will be distortion calibrated in the usual manner to obtain the correspondence of rays in object space with points on the image plane; however, this calibration has to be done without the fish-eye windows, since their contribution is affected by the positions they assume on cool-down, so that the grid of points used in object space lies on a curved surface. Also provision is made for measurement of entrance pupil shift.

2. Chamber fiducials.

These will be crosses marked on Scotchlite fixed to studs on the chamber walls and also crosses on the Scotchlite on the piston surface. We shall not know the co-ordinates of any of these precisely, nor shall we know the co-ordinates of the camera lens entrance pupils; however, by measuring enough fiducials with all cameras it is possible to calculate positions of fiducials and cameras exactly, apart from an overall scale factor, using the camera distortion calibrations.

3. Fish-eye windows.

From the above it is clear that we should like to be able to project back from the camera object space through the windows and into the chamber as if the windows were all perfectly concentric with each other and with the camera entrance pupil: the windows cannot be included in the distortion calibration and since the fiducials in the chamber are not accurate we cannot evaluate subsidiary distortions due to the windows. However, it has become clear that (a) the windows cannot in practice be made concentric to the tolerance required and (b) it might not be possible to mount them concentrically to tolerance, bearing in mind thermal contraction effects and the piling up of mechanical tolerances. The present approach to this problem is (a) to measure the eccentricity of each window, which can be done with adequate precision, and (b) to measure, by an auto-

reflection technique through the camera lens, how eccentrically each window is mounted, when the chamber is cold and filled with hydrogen; this has been done with a rig imitating the working conditions and an optical system for use in the camera cartridge is being designed. The results, in the form of a table of co-ordinates of the centres of curvatures of the six window surfaces relative to the entrance pupil, will be used in the geometry program to trace rays back into the chamber.

An alternative approach which is being investigated at present is as follows. If a window is not concentric it is in effect a meniscus lens with an axis, the line joining the two centres of curvature; this axis will not, in general, be parallel to the nominal axis of the window because there may be lateral decentering. As a meniscus lens it has two nodal points, N and N', on this true axis and these have the property that a homocentric pencil converging to N emerges as a homocentric pencil with the same angles and converging to N'; this property applies in general only to paraxial rays but it has been shown that in the present case of small decentering it applies also to rays at all angles. The approach is then to deliberately mount the windows decentered so that N' for one coincides with N for the next; in this way a system will be built up which does not introduce any distortion although it is not centered. If this could be done there would be no corrections to be introduced for the windows and this would be a major simplification. It is not yet clear whether the tolerances for the required deliberate decentering are broad enough. In any case the system for monitoring the window positions as mounted would still be used as a check.

10. Scan-Measure System for Gargamelle

M.J. Esten, University College.

Well, Fred Bullock has already outlined some of the problems that you land yourself in when you try to reconstruct the measurements you make on film from these very large bubble chambers, Gargamelle in particular. These are the consequences of the design of the chamber. I propose to talk about the effect that this design of large chambers and Gargamelle again in particular, has on the scanning and measuring equipment.

Just let me remind you first of all of the salient features of the design, (Fig.16, in talk by Bullock) which are relevant for considering the scanning or measuring problems. The important features are the very wide angle of view of the lenses, the total width is 110°, the optic axes are inclined at an angle of 66° to each other and you have the large chamber depth about 1.9 metres which results in a very large change in magnification across the chamber. The demagnification is about 20 to 1 near the lenses and about 80 to 1 at the far side

of the chamber making a change of a factor of 4. There are 8 lenses and, as you see in the top part of the figure, two films. These lenses each see only a part of the chamber which is a difficulty when it comes to scanning and measuring. Let me list in turn the actual features affecting the scanning and measuring.

The first point is obviously the wide angle of view. This results in two problems really. The problem of cusps and loops which has already been referred to, and the other apparent change of size. The second point is the variation of magnification. These two features are going to leave difficulties in scanning and measuring. It will be difficult to include, for example, size dependent scanning instructions. In other words you will not be able to have, simply anyway, scanning instructions of the form record the event if the Λ^0 is within 10 cms. in projection of the presumed production vertex.

The third design feature is what I shall call the port-hole effect. The fact that each lens is looking at the chamber through a little port-hole and only seeing a part of the chamber. The trouble that that leads you into, of course, arises when you wish to associate a V^0 or a gamma which you might see in one view with a presumed production vertex in another. The port-hole effect also gives you various other problems. I'll mention one more - the bridging across views, which I think Fred Bullock referred to - it's essentially a track matching problem - where you wish to associate which track belongs to which track in which view.

Well, how do we propose to get down to these problems in University College in the case of Gargamelle? What you can do is you can have your scanning table fitted with some rough form of image plane digitizer and you can have some rather smallish computer attached to it. In deciding if a gamma points it's easy enough to just make measurements of the production, or presumed, production vertex in one view with respect to fiducials, and the gamma materialisation vertex in another view, with respect to the fiducials, one then asks the computer what the projected angle in the view in which the gamma appears should be, gets the answer back and compares it with what it actually is. That should be quite a quick process.

The same will apply to size dependent scanning instructions, it's very easy to make a few measurements and ask the machine whether the true length of the track in space or the true distance between two vertices in space, is greater or less than a certain amount. So it looks as though one can get round these problems quite easily with some form of computer assisted scanning.

You then ask yourself really how far you should go in this computer-assisted scanning, namely is it possible for example to use this as a complete measuring system. In the case of a heavy liquid chamber such as Gargamelle there's no

problem here in that with suitable care an image plane digitizer can give you adequate precision. So that the image plane digitizer that we are talking about for dealing with these two problems can in fact form the basis of a complete measuring system and you then ask yourself the question - well what function does my computer perform? Is this computer to remain solely a simple data acquisition system, just doing rather elementary checks, as many systems do nowadays, or should we try to do three-dimensional geometry on line? Well the answer here is that we should be doing full three-dimensional geometry and the reasons really are threefold, or perhaps fourfold.

The first reason is due to the anticipated high failure rate that we expect in Gargamelle. It's very difficult to estimate what the failure rate is going to be. We can certainly say for example that the failures we get now in our measurements are distributed, in the heavy liquid geometry programme anyway, roughly equally between what I might call early geometry and late geometry. By early geometry I mean that part of the geometry programme relating to checks in each individual view and late geometry that part of the programme which actually does a three-dimensional reconstruction. It's quite clear that most of the faults in measurement of Gargamelle film, and I think probably all large bubble chamber film, will manage to get through the early geometry and they won't manifest themselves as faults until later geometry. The reason for this is that if you'd got wierd shape tracks and you're measuring the co-ordinates along the track, it's very difficult to perceive of any powerful check on the accuracy of your measurement. Obviously the checks we have at the moment are points out of line checks to circle fits, and these you just won't be able to use. A lot of inaccurate measurement will get through and won't crop up until the three dimensional part of the geometry is carried out. So a simple data acquisition system will not pull out most of your failures as it does now.

The next point is simplification of administration. By this I mean that if you can carry out your full three dimensional geometry at the time of the measurements, then book-keeping problems are eased. You know that when you've finished with an event you've finished with it for good. There's also a sub-section here which is a heavy liquid peculiarity of which a lot of people might not be aware. This is the use of prints and scan cards. Heavy liquid people have been forced to remain in the Stone Age concerning prints and scan cards in that no heavy liquid group to my knowledge has succeeded in getting away from them. The trouble is due to the small single scatters that you get, kinks, as we call them, which have got to be measured as corresponding points on all views. These can be very small angle scatters and as you're interested in piecing up the track from kink to kink, you have to mark these as corresponding points. Frequently

your failures can be associated with not having identified the kink properly. We thus have to mark the kink accurately on prints. If the event fails a girl comes back to measure it in a week's time. She looks to see where the kink was marked previously and remarks it on the 'photo and proceeds to measure. Thus you have a record of what's gone on.

And the third reason why you chose three dimensional on-line geometry rather than simple data acquisition is that the cost per event is less. It's difficult to estimate these things. We reckon that on a typical experiment it's down by a factor of about 1.5.

So it looks as if we are ending up with a scanning measuring system all in the same machine with an on-line computer doing your full geometry. It's not so necessary I would say in these large chambers to insist that you separate the scanning and the measuring procedure as you do now because your event rate is going to be very much higher and consequently you don't mind running the two things in parallel.

Fig.19 shows the broad outline of the scan table design by the CERN-UCL-Aachen collaboration in which one can display any of the eight views on the table, in fact you can display up to three without overlap at any one time.

In Fig. 19a is also shown the film transport system. This is actually the design of a development model which has been produced at CERN and we hope will be going out to tender shortly. Each table I should say will be fitted with an image plane digitizer and an input output typewriter. The computer to be used is a DDP 516 32K disc store, tape drive and we hope with this we can achieve a typical time for three dimensional reconstruction of about 10 seconds per track. The way we propose to run the system is that you measure all the pictures on one track, you're not allowed to proceed to the next point until the preceding point has been checked obviously. Having completed the measurements of one track on one view and having had it checked, you can then proceed to the same track on another view of your choice and at the end of the third view you then launch into your three dimensional reconstruction. Perhaps ten seconds is a typical waiting time at the end of the third view. We find that even if you have six tables on line to the DDP 516, we have looked into the queuing problem that you get quite seriously, and if the time for one table is about ten seconds, then with half a dozen tables on line the time really typically shouldn't exceed 15 seconds at the most.

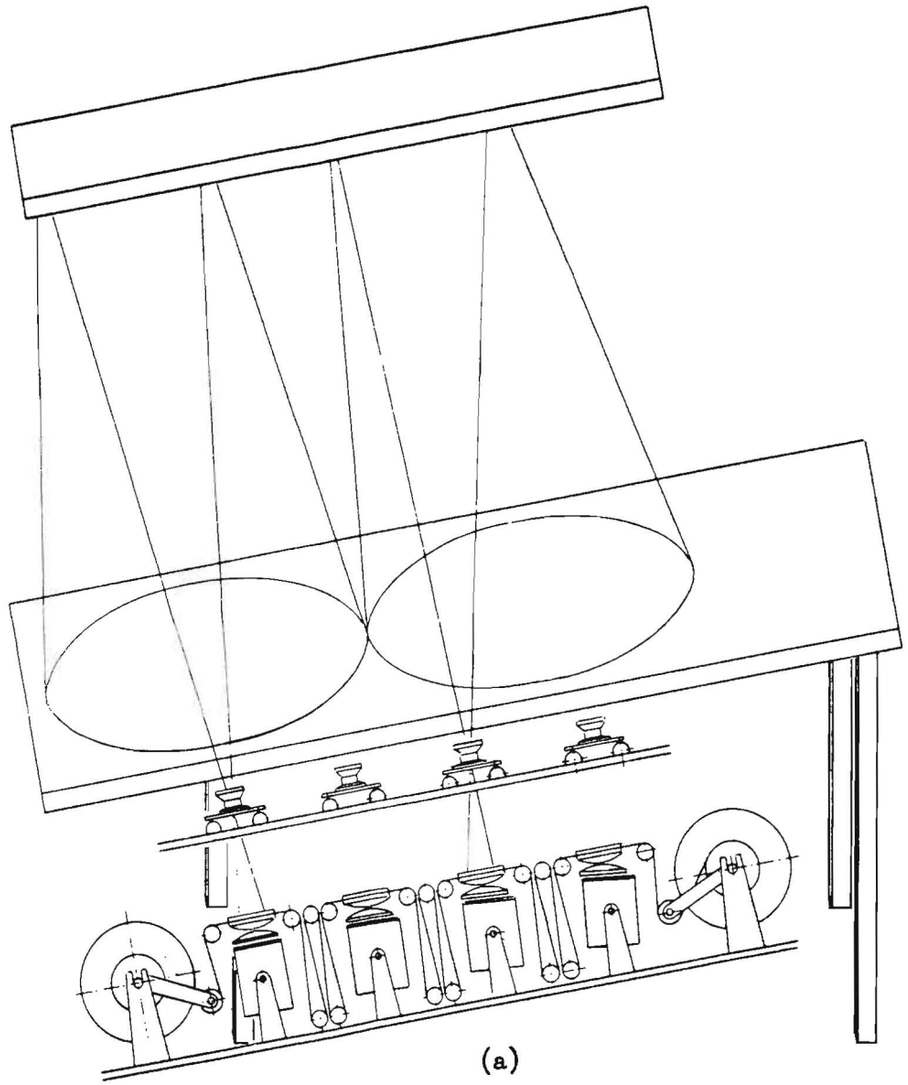

(a)

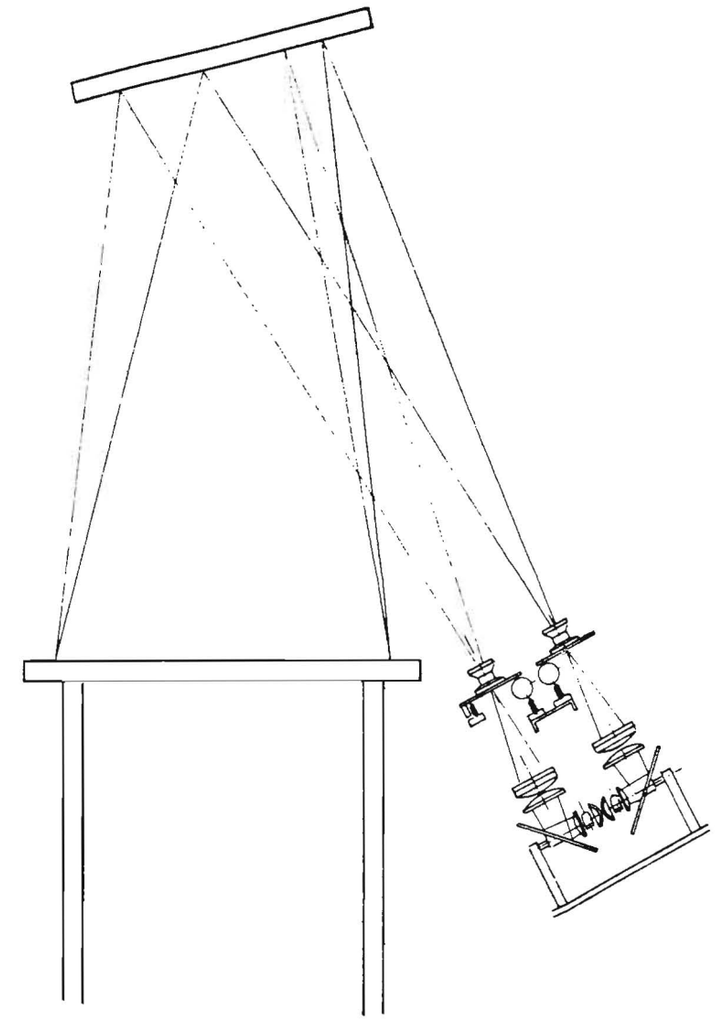

(b)

Fig. 19

11. Future Work on PEPR

P.G. Davey, Oxford.

There seems little doubt that ultra-high-resolution CRT's will be increasingly used to enable programmes to use B.C. film as a random-access read-only store. Accuracy to 2×10^{-5}, and resolution to 1×10^{-4}, of the measured field diameter is becoming fairly commonplace. Production measurements on POLLY as well as PEPR amply demonstrate that such accuracy and resolution are adequate for present chambers. CRT's are still being significantly improved. Replacement of the CRT by an electronically-positioned laser beam does not seem imminent, although the improvement in signal/noise ratio given by a much more intense beam would be very attractive. (Scanning rates on film are at present limited to about 200 microns/microsecond by the properties of current phosphors and the ligh-gathering power of present optical systems).

PEPR hardware differs from other CRT devices mainly in its ability to form a 2 mm long line of arbitrary angle in place of the normal spot, using a diquadrupole to spread out the electron beam along the desired axis. The purpose of this is to form local histograms of bubbles upon any axis within a 2 mm square "scan cell". The advantage of this technique is that the histogramming is done in analogue circuits which can handle up to 6 tracks in one cell, taking about 15 μ sec per angle tried. Analogue circuits are better than digital in avoiding "catastrophic" errors in confused or marginal regions, and give good spatial averaging of local irregularities in the bubbles. They can histogram much faster than general-purpose digital hardware (execution of computer instructions) but probably little faster than ad-hoc IC digital hardware. The disadvantage is that information about each bubble is acquired afresh for every histogram in the scan cell, forcing the scanning system to work on the extreme limit of shot noise at the photocathode, whereas using a conventional slice scan with a spot (as in POLLY) each bubble is sampled once only, for a much longer time. Thus the high cost of PEPR's "fast" optical system and video electronics must be added to the considerable extra cost of the diquadrupole system, when comparing PEPR's technique with, say, POLLY's. A further disadvantage of using the "line" technique is that the "element recognition" programme at present takes a significant further time to correlate the finished histograms, representing a track scanned at different angles, to form a single track element. It is likely that ad-hoc digital hardware would perform this "element recognition" process in real time during the histogramming: but this becomes an increasingly complex and costly investment. A rough comparison of the time (in the scanning hardware only) taken by PEPR and by POLLY to follow 1 mm of

clear track is:

PEPR: Histograms at 10 different angles (assumes direction is fairly well-known) taking 15 μ sec each: 150 μ secs.

POLLY: 60 slices across track, each 40 μm long (same assumption) taking 10 μ sec each: 600 μ secs.

showing that the theoretical upper limit to PEPR's speed is only some 4 times faster than POLLY, although the scanning speed on the phosphor is roughly 40 times faster (160 μm/μsec: 4 μm/μsec.).

The PEPR groups at MIT and at Oxford are actively considering some form of 3-D work. MIT's approach is entirely general, involving the simultaneous use of 3 complete 5" CRT scan tables to allow, for example, a space track-follower programme to test for corresponding points by random access to any track in any view. At Oxford a more restricted approach is being made via. a single 9" CRT scanner which gives random access to 2 views of 50 mm film but only serial access (by mechanical movement) to the third. At the present time the hardware is about half-complete. Initially, software will be developed to establish to what extent random access to 2 views can reduce ambiguities arising during track-following through confused regions - tracks lying parallel to the line joining those particular camera axes being excluded. Experience with such software will also show with what accuracy optical constants for the chamber must be known for 2-view correlation to be effective.

The CRT to be used in this 9" PEPR will give a spot diameter of less than 20 microns anywhere over a 200 mm diameter field.

DISCUSSION

Question:

What is your signal to noise ratio?

Davey:

2 to 1. At times the noise buries the signal but we can work if it is upwards of 2 or 3 to 1, with things slowed down as at present it is 4 or 5 to 1. The noise comes from the quantised release of electrons from the photo cathode. About 25% is the quantum efficiency of the cathode at the wavelength used. If you calculate the bandwidth and the small number of photons that come through these objectives it is what you would expect.

12. GENERAL DISCUSSION

J. Burren:

I'll try now and conduct an open and general discussion. I can perhaps make a starting remark, and that is that there are two ways in which you can look at

things. You can say to yourself, that these big bubble chambers make the pictures look even worse than they are now, more complicated and non-circular and so you can't possibly handle the problem in a computer automatically. You can conclude that one must think in terms of making it much more easy for human beings by giving them say the computer on line. The alternative approach is, that we can't expect humans to sort out such complicated pictures. Would anyone like to make some comments about should one concentrate about making it easier to have humans do a lot of the work involved or should one still be battling away at more automation and using the computers more?

Butterworth:

The advantage of automation is that in 3-D the tracks are simple, it is only in 2-D that they are not simple. They are still helices in 3D and that is really a very simple form of curve to identify. If you are committed to a three dimensional reconstruction programme, and three dimensional measurement it may well be that the pattern recognition problems are much simpler than the ones we have had at the moment. This will be the line taken by, say Thompson, with his three dimensional HPD. He would argue as well that this is the economic solution since you can then put large numbers of beam tracks into a picture without any confusion because in 3-D they are not confused, they only appear confused in 2D so we get much more data taking. So there is something to be said for the computer based approach in three dimensions.

J. Burren:

Perhaps we could have a comment from you Peter, are you thinking of building the human more into PEPR or trying to get rid of the human?

P. Davey:

I think I still like to feel that in PEPR, at any rate measuring the simpler types of film we are all used to, you want the human intervention to be at its most active only when you debug the programmes and you are trying to get the thing to work at all. I think you have got to give everything you can to put the programmer into the picture, to let him know what is going on. Now after that, in the operational stage, I can't really speak from experience. Yale are taking the course of doing away with the human altogether, and they seem to get along somehow. I'm not quite clear myself how much work there is for the human at MIT. I think the broad answer is that we still would like to imagine the human rather in the background.

J. Burren:

One thing from the 3-D approach that seems to be relevant is that the match problem is rather hard. Perhaps even harder than filtering in 2-D.

P. Davey:

I understand that MIT at the moment are very satisfied with the performance of their match. They no longer demand any labelling of tracks and they are getting

very good results with the matching algorithm proposed by Pless.

Welford:

Do you get matching problems on the big chambers?

The matching problem on current chambers seems to be fairly well wrapped up from what I have heard from Argonne.

Burren:

I don't think Berkeley or CERN could say that the matching problem is beaten. I've spoken about Spiral Reader to the CERN people;I don't think they would regard the matching problem as easy by any means particularly for the large chambers. You can use the triangle method but I don't think it will be so effective because obviously the bigger the chamber the worse it is.

Butterworth:

The stereo angle is in general larger on the big chambers which could make life easier.

Burren:

I don't know if anyone thought about matching for the fish-eye chambers. Most people would be quite happy to be able to reconstruct them at all.

Robinson:

Could you say what is the algorithm for track matching and why does it make it more difficult in the larger chambers.

Burren:

Basically this is the simplest possible method of getting corresponding points, and then just seeing how near to a track they lie in space, or how near they would lie to one another. But that is using the simple three corresponding points very similar to the camera triangle. That is quite a good crude reconstruction for matching purposes and I presume something like that is what is hoped to be used.

Burren:

We now in this country have a lot of measuring equipment being built, have we got enough? Do we need any more speed or is that really a problem that can be disregarded in the future? Is the capacity of the current machines adequate?

G. Stafford:

I'd like to remind you that this morning, somebody pointed out that Berkeley could cope with a million and a half events a year so the existing machines could cope with the physics requirements. It is the organisation around them that needs improvement.

Butterworth:

I have the obvious comment that it is very hard to keep up with the sort of measuring rates that Berkeley have and that we might conceive of getting from our present machines. If you talk to the user physicists in Berkeley, they are essentially going mad over lost events and events that have got measured twice.

Even this well geared-up system gives book-keeping problems in a Laboratory that has put a lot of effort into their book-keeping.

I. Hughes:

That, of course, is partly due to the fact that there are pre-digitised HPD systems, that is a messy system with terrible organisation problems with 20% kick back into Frankensteins.

Burren:

Solmitz with two spiral readers also agrees that no longer is measuring a problem. It's all these incidental problems.

Frisch:

It seems to me that if the only problem were to increase the world production of scientific results it might well be best to centralise the entire bubble chamber measuring Berkeley. But that isn't entirely the aim because all our students are learning a fair deal, are taking part in measurements to some extent, and are taking part in the construction and commissioning of instruments. It is for that reason that I will speak up in favour of variety, and for smaller and not so expensive machines that can be used in small units and in small universities.

Robinson:

The thing is if all the HPD's and spiral readers and all the other measuring machines were going flat out there wouldn't be enough film to keep them busy. That is certainly true for Europe.

Burren:

The only group that I know of who are thinking about faster machines are the Brookhaven HPD Group, they have thought of designing machines that can go perhaps five times as fast as the current HPD. Myself, I think this is very unprofitable and I think everyone tends to agree.

Wilbur:

I think you're right, I think everyone does agree. The problem now is the low contrast tracks of the large chambers.

Butterworth:

I would like to ask the owners of HPD whether they think they will still be using these HPDs for the 3.70 metre chamber.

Davey:

Why does this come into question, why can't the current HPDs deal with this film?

Butterworth:

I think it raises the question of the usefulness of road guidance against minimum guidance. The road guidance system basically assumes that the tracks are circular. You don't want to increase terribly the length of time that you take to pre-digitize the event. Also the varying bubble size from back to front of the picture is not nice for a mechanical scan.

Question:

Why?

Butterworth:

It is clearly not nice for any system, in particular it is not nice for HPD.

Davey:

Surely this is the problem you have to develop the HPD, the PEPR, POLLY, SWEEPNIK in order to deal with this problem.

Frisch:

I might say that the problem of varying intensity etc is something where Sweepnik might score because the computer on line allows it to change the discriminating bias as you go along.

Butterworth:

This is my fear about HPD. That it is an inflexible object.

Colley:

People do have trouble in getting the right signal to noise on present film on all of the automatic measuring machines with the exception of SWEEPNIK. It seems to me that a lot of work has to be put into the problem of measuring these tracks where the contrast is not very good.

Burren:

Well, there are various comments one can make, the machines which basically use track following in the sense that they don't have all the information are going to be hard pressed when the tracks have cusps and loops in them. I don't say that machines that basically have all the information don't also have terrible problems with track following. But, there is quite a lot of information now on track following, it almost seems to me that it will be a good thing for somebody doing a Ph.D to try and collect together all the information and know-how relating to track following. Track following is used in the HPD programme and several years ago people looked at it very hard as to what are the best algorithms for prediction and correction to track following. I expect people are re-discovering all this now in the POLLY and SWEEPNIKS and so on. I would certainly agree with Professor Frisch that systems work is vitally important to the country and therefore the people that are trained by Universities in building systems are certainly more important in the balance of payments than Bubble Chamber Physics. It is hardly likely that I will get Ian to agree with me that we should regard our HPD as a trainer rather than a producer of events.

Fisher:

I don't like to make the obvious remark that if one is thinking of making machines for use with the large chambers you must be thinking of precision which is better than 2 or 3 microns because of the large de-magnification factors otherwise the precision in the experiment gets lousy. And secondly I would comment that

to-day's remarks about large volume chambers do not include the High Field chamber which can be substantially comparable to existing chambers.

P. Davey:

Can I ask one question? Is it true that any large chamber using 70 mm film is really in need of an accuracy of 2 or 3 micron?

Fisher:

It could be true. It may not be true.

People are hoping to get down to a couple of hundred microns in space. Of course thermal turbulence might be so bad that this is out of the question but one would hate to be limited in precision by the measuring machines after the effort and cost that has gone into chamber.

Turner:

Yes, it is true from optical consideration that you must have a diffraction image on film which is considerably larger than 2 or 3 microns.

Colley:

Can you measure this accurately with PEPR now?

Fisher:

This is what I am asking. We have seen that this is just about OK for HPD.

Davey:

I think that hitherto we have been used, with almost any measuring machine, to interpolating to about 10 per cent of the bubble chamber to get the actual position of the bubble. I have a feeling that with these big chambers it may be that it is not correct any more, it won't be 10 per cent of 6 to 10 microns but may be 50 per cent, or something.

We were given some figures by the UC people of the order of a millimetre. The de-magnification of the large chamber is about 80 so this means only about 12 microns on film.

Burren:

I think we have to distinguish between Gargamelle and the other chambers, the CERN 3.7 metre chamber and the Argonne chamber would hope not to have the lenses etc. moving like that, and certainly the high field chamber at the Rutherford Lab. would avoid this. All the factors are rather different.

G. Stafford:

You assumed the two micron factors didn't you Colin?

Colley:

For a master point.

Fisher:

Thats roughly what we are getting in present chambers - 2 to 3μ.

Burren:

While we were watching the POLLY film, Walter Welford made the comment to me at the time that it's a pity that we don't have that machine measuring as

accurately as the HPD and then they would really have something, and I quite agree, I would say the other way around that it's a pity on the HPD we don't have that, the track flash up and so on. What are the prospects, and I think you've already gone through them towards the end of your talk, of the CRTs improving?

Davey:

They are slowly improving. The current figures on accuracy and resolution I gave are about as good as can be expected for the next year or so.

Burren:

Well, what about the next few years then?

Davey:

The M.I.T. system measures to about 3 microns. So you take 3 microns on a 35 millimetre film, that is 10^{-5}.

I think the MIT PEPR certainly measures as accurately as any. The hardware drift of the ASTRODATA PEPR is only 1 micron in 24 hours.

Burren:

One thing that seems to come out of your talk is that somebody might look at a measuring machine, which is a cross between PEPR and POLLY.

P. Davey:

I think there is no great gulf between PEPR and POLLY and that the main achievement of POLLY is to get the system to work fast and it's pretty clear how. You do it by building in the operator particularly through the debugging periods and giving really good controls and displays.

D. Colley:

It is also true that POLLY is very economical. Like SWEEPNIK you use a relatively small computer to do the job that in some places takes a 6600. I was a bit appalled by the figure you put up for minimum guidance this morning, when you said it would double the time required - that means a second 6600.

J. Burren:

It doubles the time of the road guidance which doesn't take a 6600. The measuring stage is only a small fraction of the total that eventually comes out as the time that each event took.

D. Colley:

Perhaps that is where people should be putting their attention. It is getting to be increasingly expensive, isn't it? You are getting more and more sophisticated and you seem to need bigger and bigger computers.

J. Burren:

The computing load that a bubble chamber group put on the machine grows very rapidly, i.e. for things other than measuring and geometry and kinematics. So that to say that you double one component of a long chain doesn't mean that we need to buy another 6600.

?

Incidentally, CERN TC Division made some estimates recently. Their estimate is that their computing will be equivalent to one 6600 for bubble chamber physics if they grow at the same rate. I think it's either 1970 or 1972 in which case Burren's comment would be correct in that a big laboratory is devoting the equivalent of one 6600 to road guidance.

J. Burren:

Does that include the physics to the end of the experiment.

?

That was just a rough estimate of the growth of computing for Bubble Chamber Physics and that was based on the estimate that they would have one more device than they currently have, either another HPD or another spiral reader which only really brings them up to the number that Berkeley already have.

Colley:

They reckon at Berkeley to use about one 6600 don't they?

J. Burren:

Yes, and the HPD doesn't come into that as far as the road guidance is concerned, that's all done on the 7090.

G. Stafford:

This argues in favour of more human intervention doesn't it?

J. Burren:

Well, I wanted to go back to that question, you talk about Polly being a small computer but Glasgow plan to use 128 K of the model 44 which is roughly the same as you are going to use for your HPD.

Butterworth:

At the Argonne they are using a SIGMA.

C. Robinson:

Argonne intend to do geometry with it, and just to have Polly using a small section of the SIGMA 7. They reckon that they won't use a great deal of the CPU time. They think that they can do geometry a few events behind.

J. Burren:

But presumably the Cambridge people are happy with a PDP 7.

Frisch:

Well, it really produces an output tape which has to be passed on to a big machine for geometry.

J. Burren:

But, can you hold with measuring the event and turning out master points? It's an 8K machine isn't it, have you got anything in hand?

Street:

Well, we have certainly got something in hand. It produces output completely compatible with the manual machines.

Butterworth:

But, in fact, the Polly people say that they want to dispose of the human in the system. At that stage their programs are presumably the same size as HPD program. They are doing HPD type scan.

Colley:

That's not quite true; we come back to this business that Peter mentioned of using the film to keep the information.

Butterworth:

I don't see what they actually save in the computing time.

Robinson:

They don't need to store the whole picture only the master points on the tracks as they find them. The HPD has to put everything in core.

Butterworth:

O.K. I guess that's true, you save quite a lot of the storage.

Frisch:

Well, at Columbia they are experimenting with doing the same with HPD, I understand, boiling down the data.

Burren:

If you have a very large computer it is not practical to keep the information on the film because for a large computer getting the information in and out is really a very severe problem. For a very large computer it is better to have it inside, the economics tend to go that way. For a small computer it would obviously be very much better to have it outside on film. I think there is another point over and above that. In an HPD system, human intervention has to take place after the event is measured which gives logistics problems.

G. Stafford:

At R.H.E.L. bubble chamber takes one third of the 360/75.

Walkinshaw:

Not recently, it's grown to half!

G. Stafford:

You can't afford to increase that much unless costs come down.

Burren:

Do we need new machines for the new chambers? I'm sure one must for Gargamelle - no present system will deal with Gargamelle. But do you need something new for the large hydrogen chambers?

Butterworth:

Many people say "yes".

Burren:

If you have to go into 3D then for an HPD that's quite a bit of hardware development.

Frisch:

If you did this for Gargamelle you would have to measure and track-follow in 8 views simultaneously.

Walkinshaw:

Returning to computing time. It used to be geometry-kinematics and now its statistics. One should look carefully at how statistics are run.

Burren:

At Berkeley bubble chambers dominate the computing at CERN, it is 50/50 with counters.

Lawes:

Where does extended core store fit in?

Burren:

There are two developments. The extended store we're getting for the 360/75 which will be available for 6600's. You can for example store the picture in these. Then there is the 10^{11} bit write once store on film chips that Berkeley and Livermore have and are testing.

Butterworth:

Some users question its usefulness because after once written it's read only - it's more like a condensed line-printer output.

Burren:

But can be read by computer.

Lawes:

How much does it cost?

Burren:

A million dollars. I expect it cost an astronomical sum, and I don't think you can buy it either.

To a certain extent the 360/75 is rather better certainly than 6600. It is no longer a completely tape machine as is the 6600. We just don't have any experience on Berkeley scale and may be it would still look just as bad if one did, but it is just possible that a 360/75 looks rather better from these points of view than a 6600.

Colley:

An enviable choice to have to make.

Burren:

I think the comment that I made this morning that the price of computing is currently not dropping rapidly is certainly true and we have already said

one can't think of another order of magnitude of computing power that will be turning up in a few years time. I don't think you will be buying 360/75 for the price of a PDP 6 next year or the year after.

Rushbrooke:

You couldn't afford the maintenance if you bought them.

Stafford:

Then Bill Walkinshaw's point comes up that a development that you might expect in the next five years is to increase the statistics on each experiment by a factor ten and that will be requiring a lot more time with computers.

Burren:

Well, perhaps I should close with what seems to be the outcome. That those who started out with feelings of doing things as automatically as possible have tended to try and get the human being into it, and I think that people with the human being built in very far are trying to get the human out of it.