SCIENCE RESEARCH COUNCIL

RHEL/M/NIM 8

Preliminary Trials On A Thin Septum for Magnets for Particle Accelerators

A R MORTIMER

A T GRESHAM

Abstract Preliminary trials have shown the feasibility of constructing magnets with very thin septums. Water flow and heat transfer conditions are outside current practice, therefore tests are necessary to understand the phenomena revealed by these preliminary trials.

Nimrod Design Group
Rutherford High Energy Laboratory
Chilton Didcot Berks

June 1971

1 INTRODUCTION

Beam extraction efficiency can be improved by using an extraction magnet with a thinner septum and a higher magnetic field. Generally the thinner the septum the more efficient the magnet becomes whether it is used for extraction from a machine or for momentum separation in a beam transport line.

Basically a higher rate of heat transfer is required between the septum and the cooling water. This can be effected by increasing the ratio of surface area to volume of cooling channel and by using a high water velocity. Improvement is limited by the increase in the ratio of length to diameter of these channels and boundary layer effects at the cooling water - septum surfaces.

Calculations shown that improvement can be achieved from transversely cooled septums. This has the advantage that there is little disturbance of the magnetic field pattern due to the water passages in the septum.

With a transversely cooled septum a high water velocity can be achieved in small diamter passages. This gives a two fold benefit, the heat can be transferred away faster, and second, a high heat transfer rate across the boundary layer of the water passages can be achieved.

To design a septum, improved heat transfer qualities have to be balanced against the increase of electrical resistance due to the small cross section of the septum and the fact that it would probably run hotter.

2 EXPLORATORY TESTS

The range in which it is necessary to operate is outside normal practice for heat transfer and fluid flow. A search of the literature has shown no relevant work reported.

Trials were first done to ascertain if the Darcy equation for calculating the pressure drop in pipes is valid when applied to extremely small bore capillary tubing. Fig 1 shows the test arrangement. Pressure drops were recorded up to a velocity in the tubing of 70 feet per second. These trials showed that the correct entry conditions were important, and that a Reynolds Number of more than 6000 (equivalent to 30 feet per second in this case) was necessary to ensure turbulent flow. Fig 10. The general formula $h \propto Q^{1.7}$ (h = pressure head, Q = quantity flow) holds up to the highest velocities measured for turbulent flow.

The importance of intake design and the likelihood that a practical design would embody a Borda mouthpiece led to pressure drop-flow tests on a rig shown in Fig 2. The difference in performance compared with the trials using the rig shown in Fig 1, was not significant enough to warrant further investigation at this stage.

The next trials were carried out to determine the heat transfer rates, and as far as possible, confirm the classical empirical formulae for forced convection conditions. For these tests the rig shown in Fig 1 was modified to include electric current leads and thermocouple leads. Fig 3. A series of measurements were made varying water velocity and current and recording temperatures at each end and in the middle of the test capillary tube. The current was increased until burn out occurred.

The temperatures recorded by each thermocouples was that of the outer surface of the tube. The temperature of the inner surface of the tube was calculated from the heat input and the known characteristics of the tube and water. This corresponded within 10% of the calculated temperature from the classical empirical formulae for the heat transfer across the boundary layer between the tube wall and the water.

The temperature of the inlet and outlet water was measured by thermometer.

Figs 4, 5, 6, & 7, 8 & 9 show the results of these trials. The interesting, and as yet un explained feature, is that the curves of heat flux vs temperature, go straight to burn out without exhibiting the classic shape of the nucleate-film boiling curve. This result requires investigation and explanation.

The maximum rate of heat transfer obtained was 2,200 watts per cm^2, ie approximately 17 times the nucleate boiling rate. The equivalent current density in copper tube would be 2,200 amps per mm^2.

3 REPRESENTATIVE TRIALS

The design of a trial septum is shown in Fig 11. This it is expected can run conservatively at 450 amps per mm^2 to give a field of 5 K Gauss in a 2 cm gap. The external current is kept within acceptable limits by the use of thin walled stainless tubes for the cooling water connected into short sub-manifolds. The latter are connected into the main manifold through insulated connections. Fig 12 shows a model magnet that will be used to check the magnetic field pattern using such a thin septum.

4 INORGANIC INSULATION

As a corallary to the work on thin-septum magnets, some research is necessary on inorganic insulation. This is because the thin septum will run at a temperature above that permitted for the type of epoxy resin now used for coil insulation. This type of insulation will give greater radiation resistance than epoxy resins and will allow a greater margin of safety in the time taken to turn off power in the event of a water flow failure.

Consideration has been given to a range of inorganic materials and methods of application. Work is now concentrated in using aluminium oxide applied in ways to suit particular applications.

5 CONCLUSIONS

These preliminary investigations have shown that a design of thin septum based on the use of capillary tubes is feasible. Trials have confirmed the use of the Darcy equation to estimate pressure drop, but the transition point would appear to be nearer to a Reynold's Number of 6,000 than 2,000 for water flow.

The capillary tubes are capable of carrying high heat fluxes, but the shape of the curves of flux vs temperature rise require more investigation and explanation. While the results shown exhibit discrepancies attributable to the accuracy of the instrumentation used and experimental method employed, they do confirm expectations and give confidence for futher work.

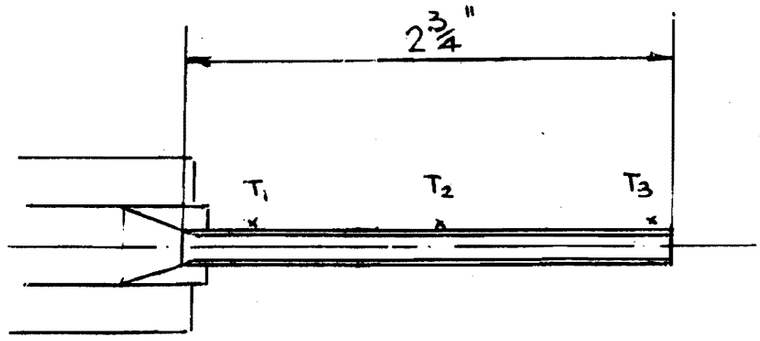

Fig 1

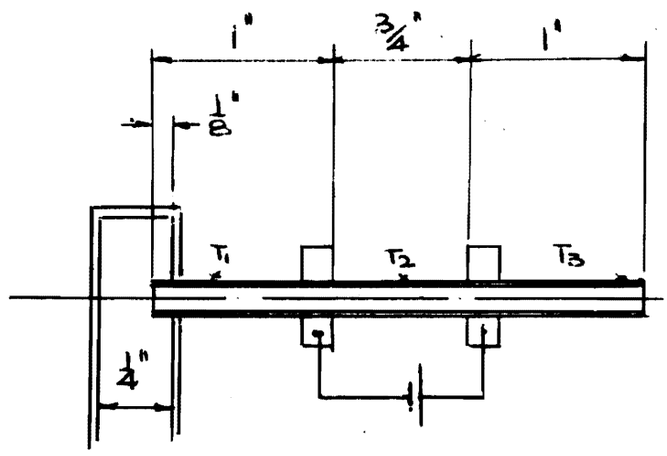

Fig 2

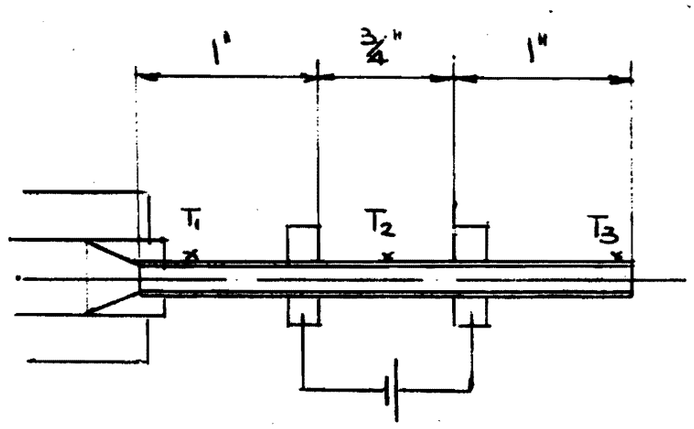

Fig 3

STAINLESS STEEL CAPILLARY TUBE

0·028" O/D x 0·016" I/D

TEST I 5-4-T1

* BURNOUT

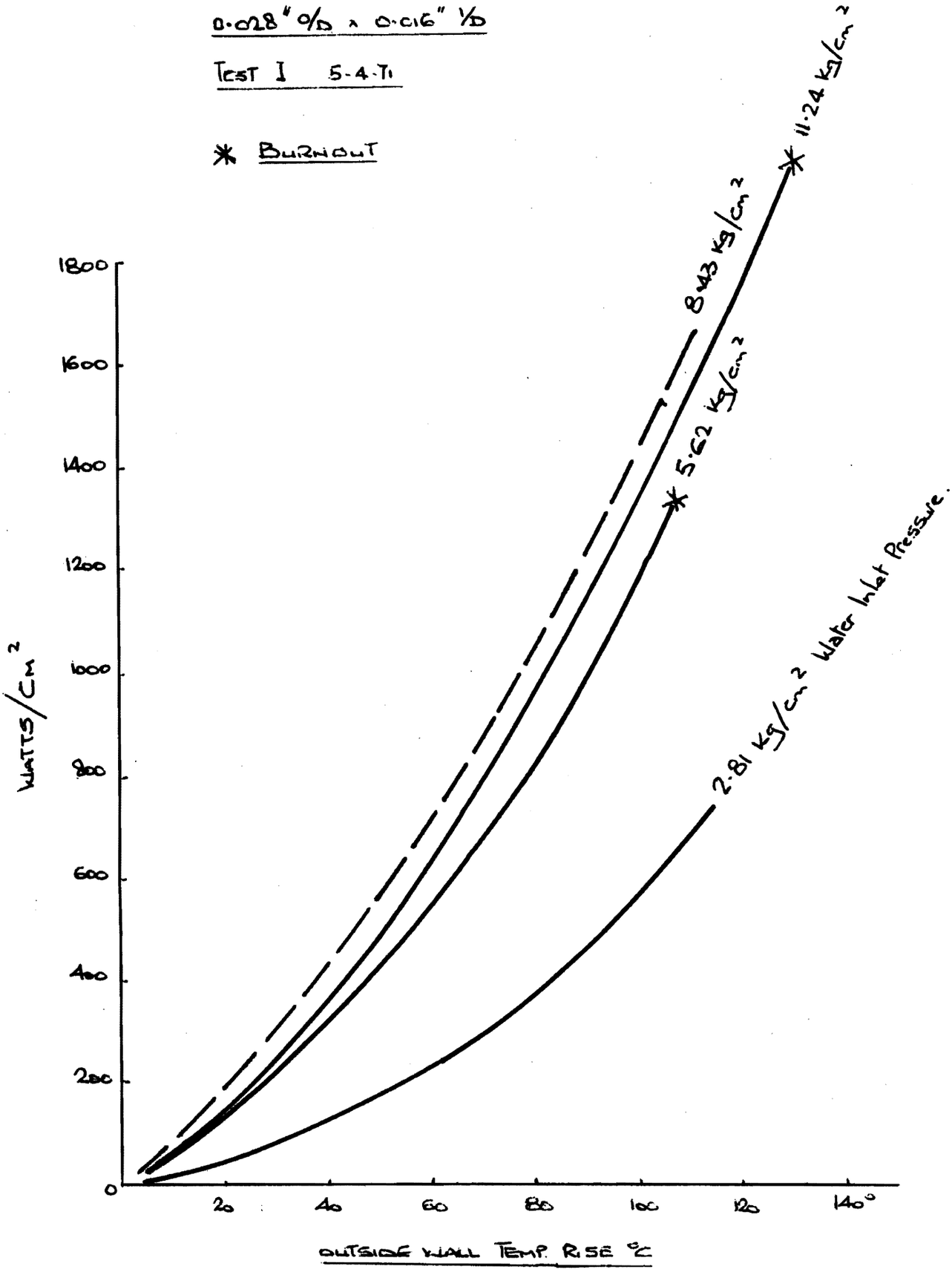

FIG 4

STAINLESS STEEL CAPILLARY TUBE

0·043" O/D × 0·028" I/D

TEST 2 7-4-71

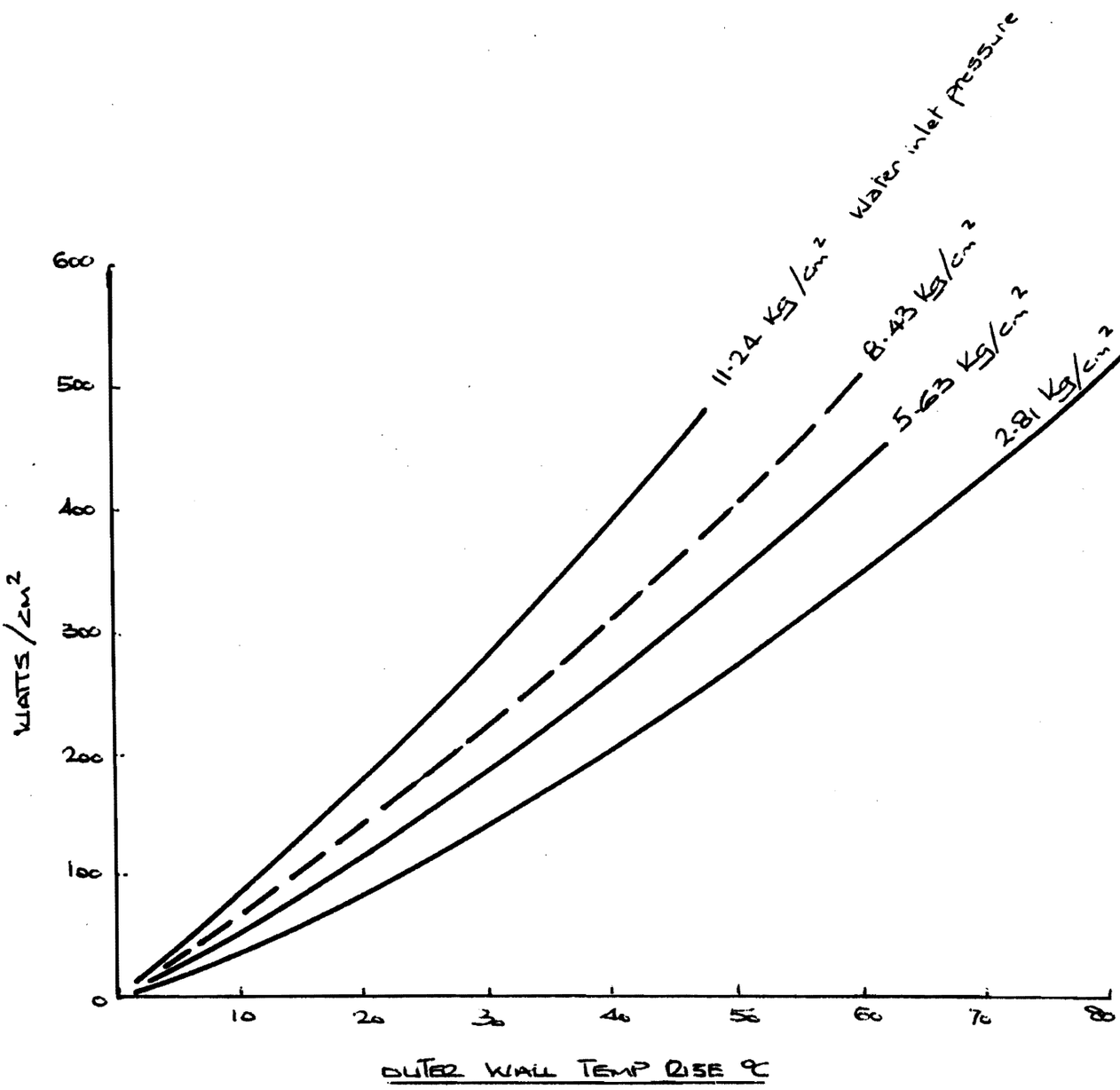

FIG 5

STAINLESS STEEL CAPILLARY TUBE

0.028" O/D x 0.016" I/D

TEST 3 16.4.71

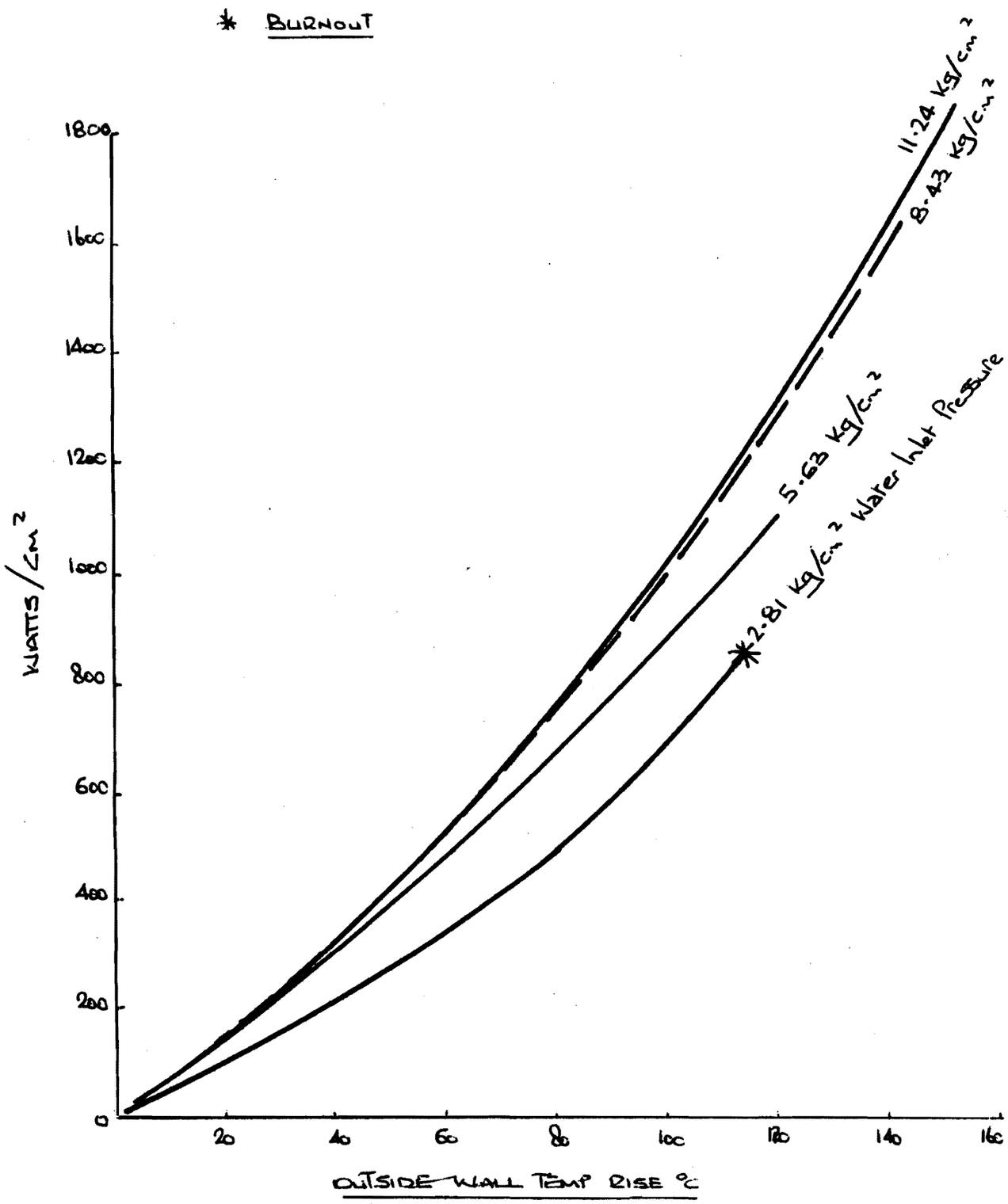

FIG 6

STAINLESS STEEL CAPILLARY TUBE

0.043" O/D x 0.028" I/D

TEST 4 22-4-71

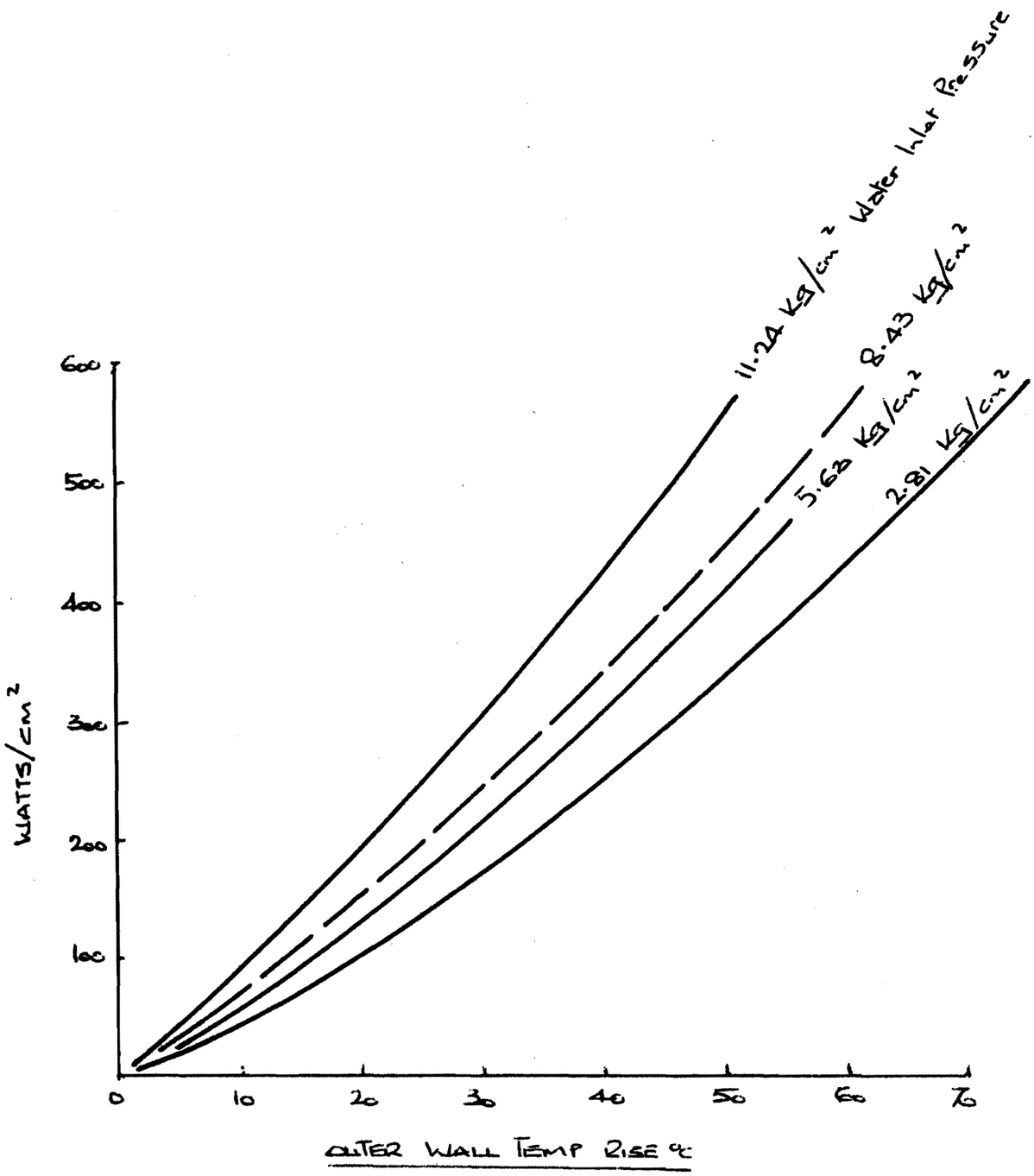

FIG 7

STAINLESS STEEL CAPILLARY TUBE

0.043" O/D x 0.028" I/D

TEST 5 22-4-71

BORDA MOUTHPIECE

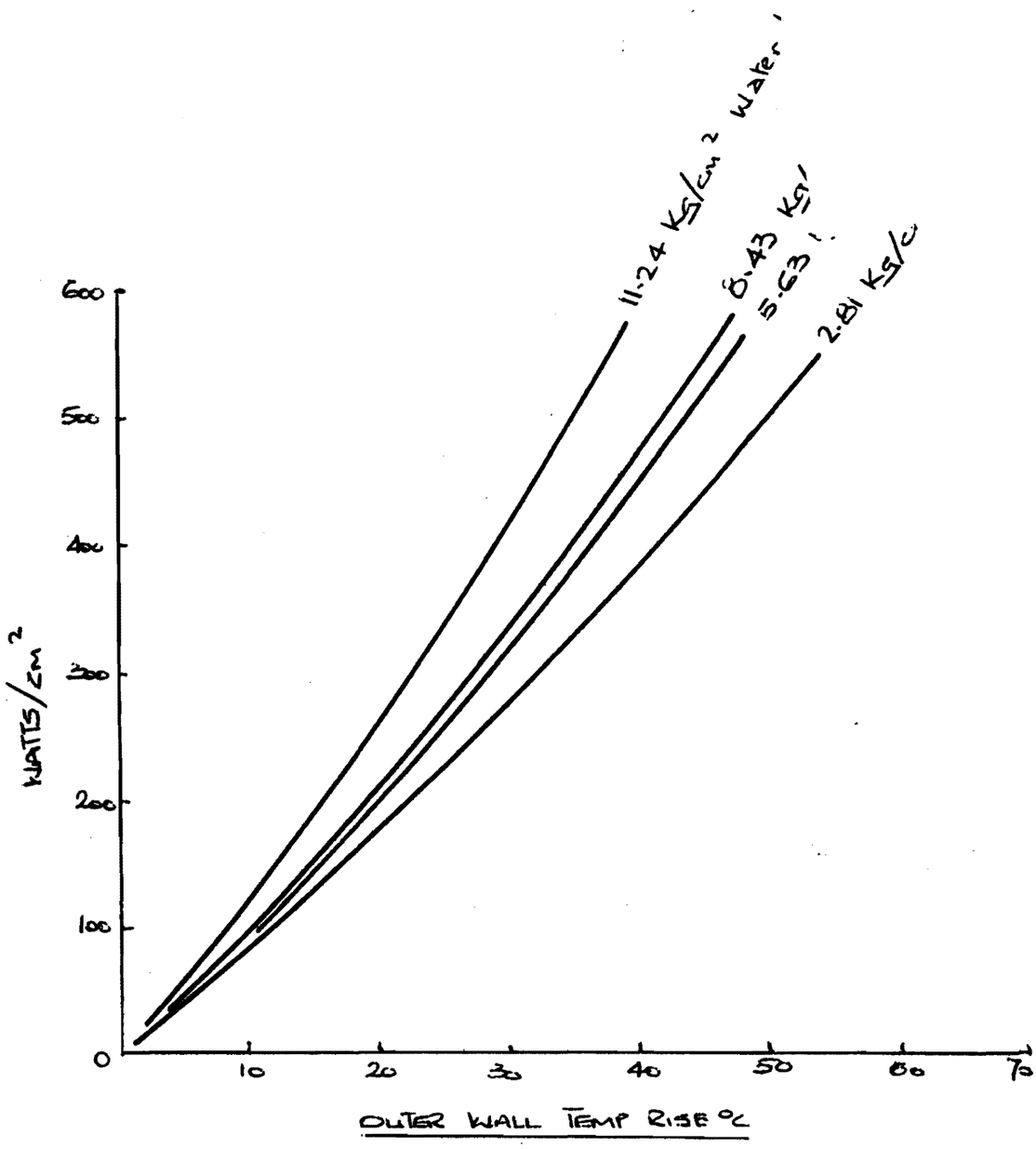

FIG 8

STAINLESS STEEL CAPILLARY TUBE

0·028" O/D x 0·016" I/D

TEST 6 28-4-71

✱ BURNOUT

BORDA MOUTHPIECE

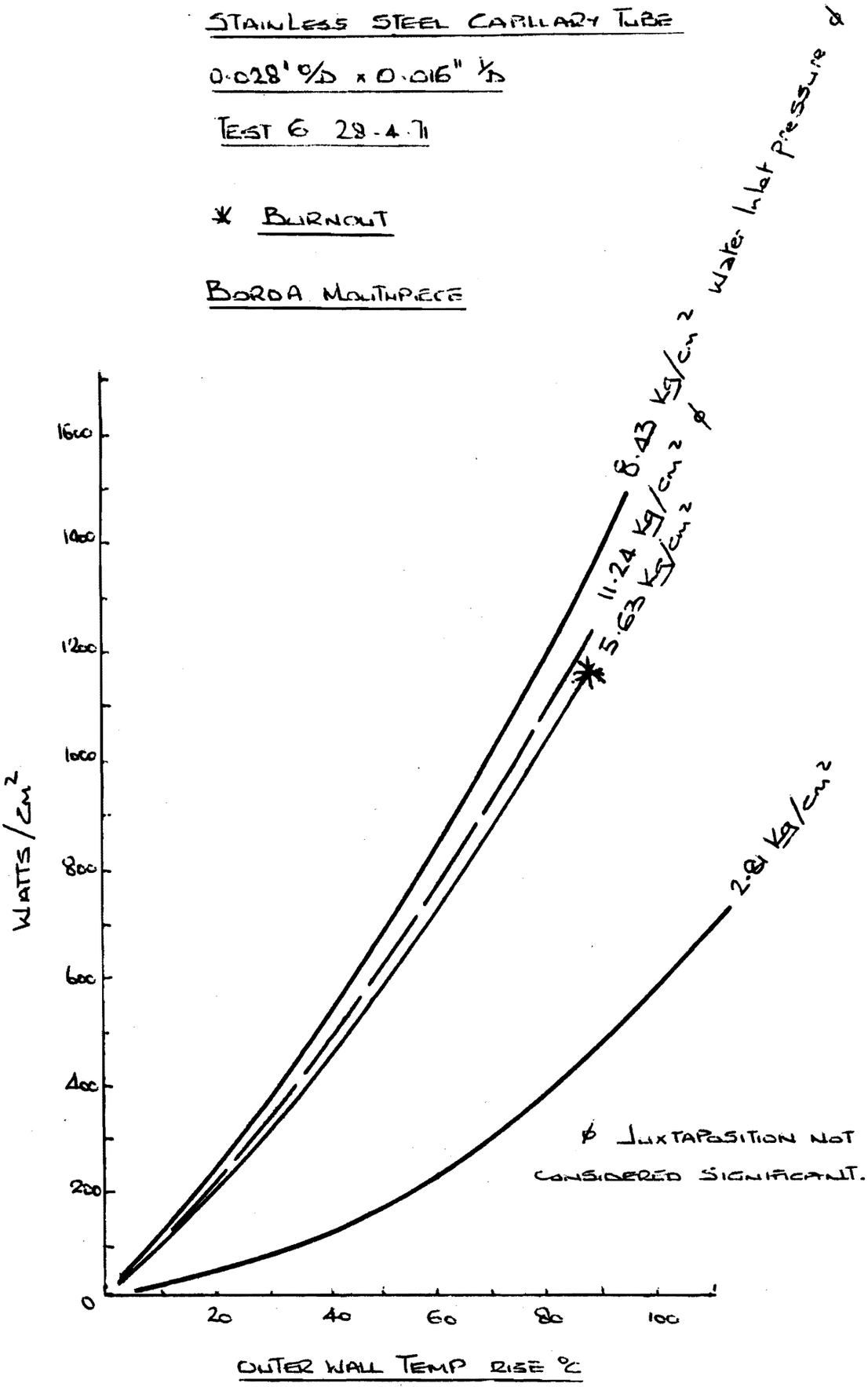

FIG 9.

PRESSURE DROP = TOTAL HEAD INLET TO AMBIENT

POINT 'A' EQUIVALENT TO R&N° = 6000

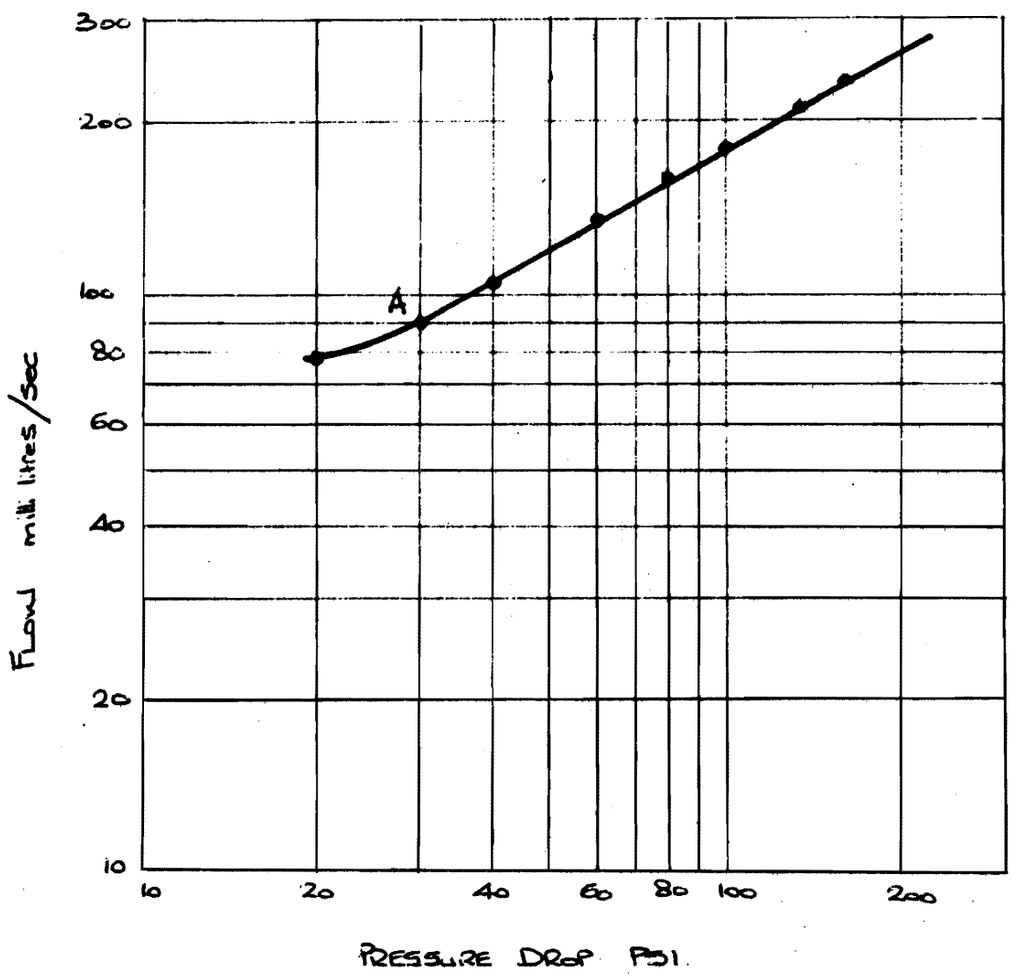

FIG 10 FLOW CHARACTERISTIC THROUGH A CAPILLARY TUBE

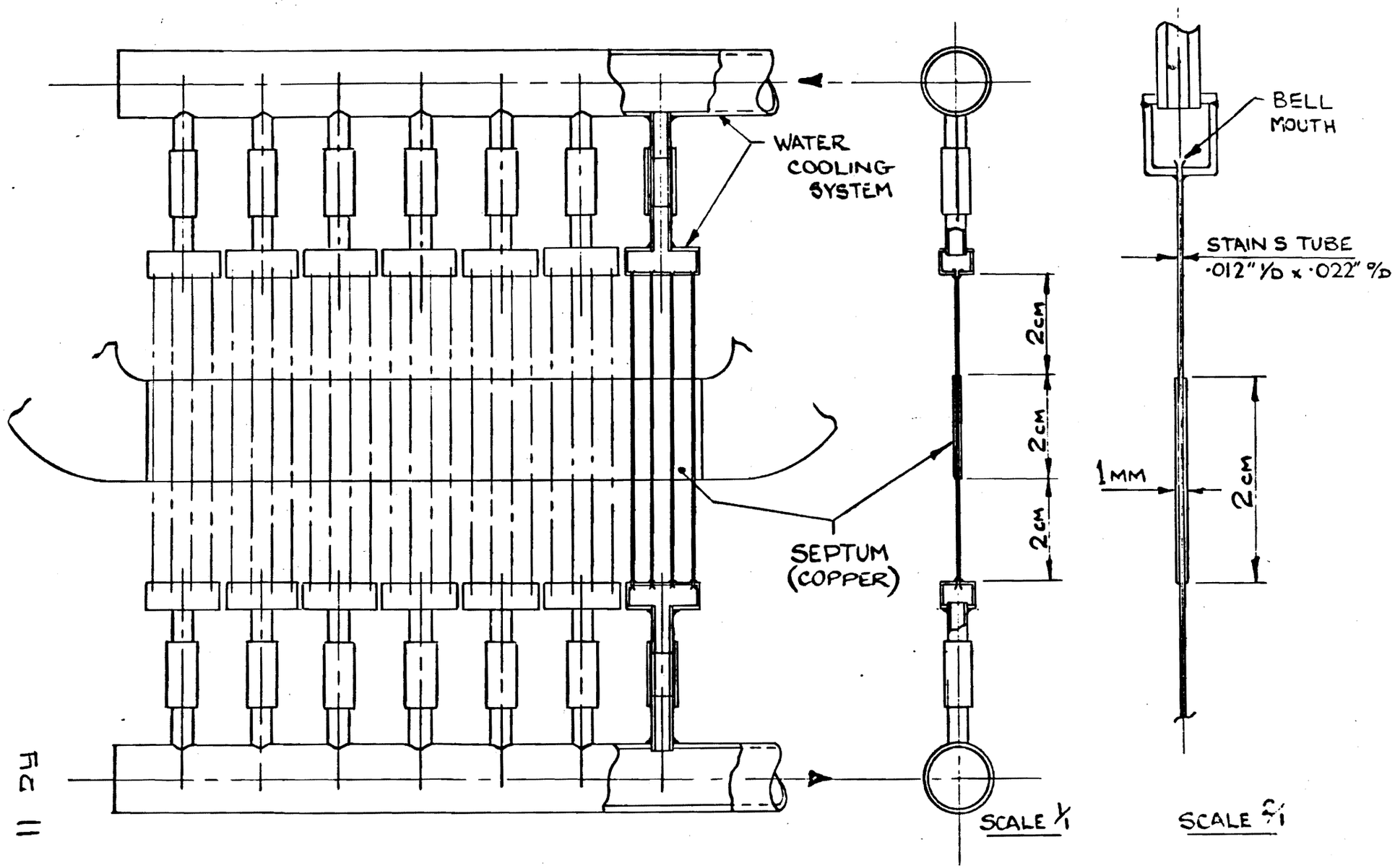
WATER
COOLING
SYSTEM
SEPTUM
(COPPER)
2CM
2CM
2CM
SCALE 1/1
BELL
MOUTH
STAIN S TUBE
·012" I/D x ·022" O/D
1MM
2CM
SCALE 2/1

FIG 11

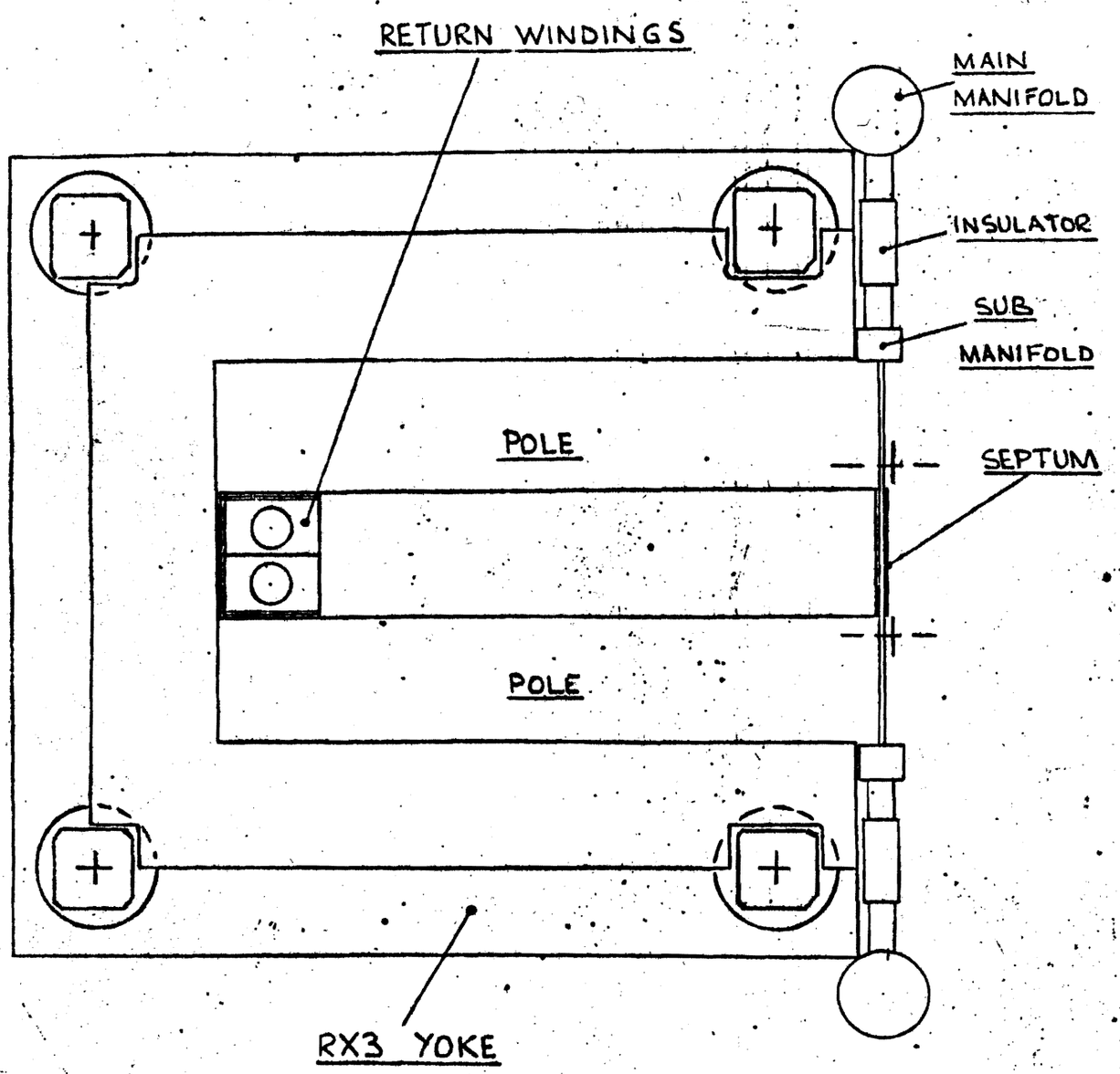

FIG.12 TEST ASSEMBLY OF THIN SEPTUM ON AN EXISTING YOKE