RHEL/M/H/26

A MAGNET SENSING DEVICE FOR BEAM TRANSPORT SYSTEMS

G.T.J. Arnison

1.1 The device described in this note was developed to overcome some difficulties encountered with a multi-element beam transport system. On several occasions the experiment was hindered by a magnet tripping off or reversing polarity. When this happened there was little indication of when it occurred and interpretation of data became complicated by these occurrences. It was possible to retrieve some of the data during the off-line analysis.

1.2 The most common method of monitoring the magnet parameters is to use a digital voltmeter to display the output of an accurate resistor in series with the pole windings. This DVM can then be connected to the on-line computer and a permanent record kept of the beam-line magnet polarities and intensity. A data logging system can be used to cycle through the whole system of magnets between machine bursts or at some regular intervals. A simple device which warned when a magnet had changed value (together with a DVM to obtain field values) would be sufficient to monitor a beam-line.

2.1 If the data-logging facility mentioned in 1.2 is not available, then the inexpensive magnet sensing device described here incorporates the necessary monitoring to overcome some of the problems. The use of a DVM is still necessary to measure the field; the device is not sensitive to small changes in magnetic field except for a region near 20 mT.

2.2 The sensing element uses an integrated circuit [1] which contains a Hall effect cell with a trigger circuit and amplifier. The output is compatible with TTL, DTL and MOS circuits. The controlling logic is housed in a NIM module in the local control room and is connected to the on-line computer via a CAMAC 24-bit parallel input gate. Power for the sensing elements goes from the back of the NIM module via multiway cable, which also carries the sensor output back to the logic module. The logic consists of 74 series TTL integrated circuits.

1) SPRAGUE ULN-3000 Hall effect switch.

2.3 The status of each magnet is displayed with LED's on the front panel of the logic module. The trigger level for detecting the field is 20 mT. When the magnetic field is above this level, the TTL output level is pulled down. The polarity sensitivity is as shown in Fig. 2. When all magnets are on and polarity is correct, the lights are off. If a magnet trips off, or reverses polarity, then the electronic alarm operates and the appropriate lamp indicates the offending magnet.

2.4 The sensing elements are mounted on a PCB and located inside each magnet or quadrupole with double-sided adjesive tape.

3.1 The limitations are that the sensors exhibit hysteresis, needing 50 mT (500 gauss) to turn on and 20 mT to turn off. However, normal practice is to run a magnet up to maximum current and then down to desired value. This determines the sensing level of the sensors to be about 20 mT, and only magnets having an operating field greater than 20 mT can therefore be monitored. If the beam-line is to be reversed for particles of opposite polarity, then two sensors per magnet are required and the controlling logic changed.

3.2 If the outputs are monitored via CAMAC and the on-line program arranged to read the 24-bit gate (this permits a 24-element beam-line) between bursts, the experiment can then be stopped automatically if a magnet fails.

3.3 The total cost of materials for this device is less than £50 for 20 channels.

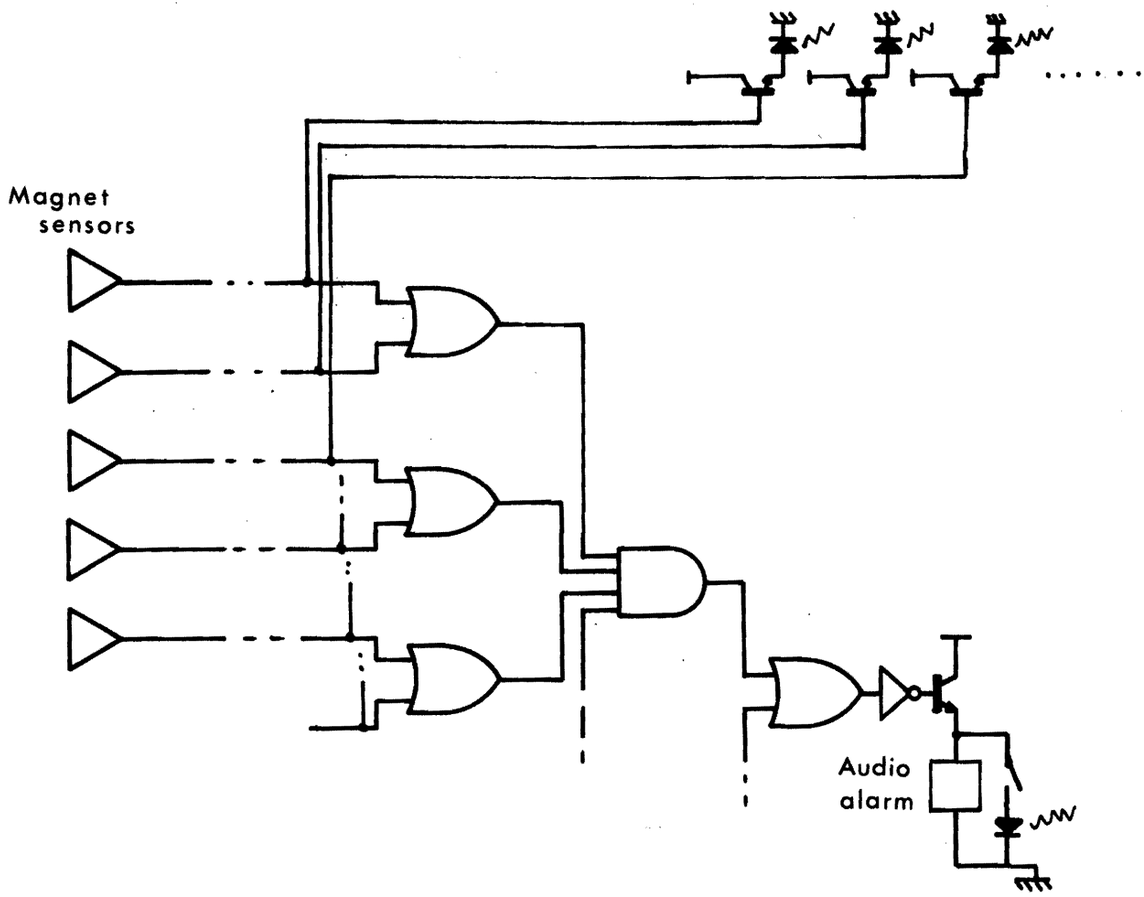

FIG. 1 LOGIC FOR 16 CHANNELS

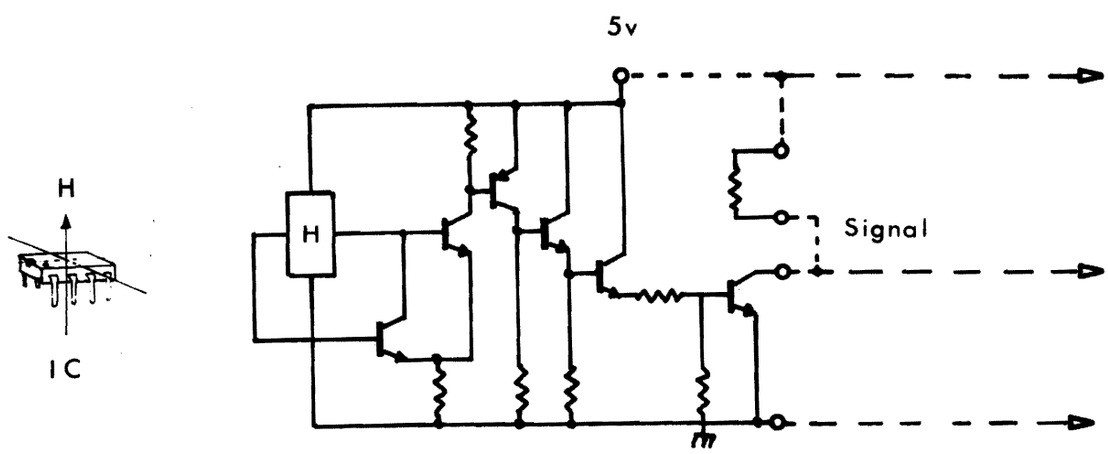

FIG. 2 HALL-EFFECT SWITCH