RHEL/M/A9

# MULTI-STAGE ENERGY TRANSFER SCHEMES

P F Smith

ABSTRACT

An extension of the superconducting energy transfer principle is described with particular reference to its possible application to synchrotron power supplies. By successively switching in a number of superconducting transformers a considerable reduction in the size of the rotating transfer coils can be achieved for a given final energy. Advantages and disadvantages are summarised, and possible switching methods are discussed. In addition, an alternative hybrid scheme is noted, in which the superconducting transformers are driven by a conventional power supply.

Applied Physics Division
Rutherford High Energy Laboratory
Chilton Didcot Berks.

May 1971

## 1. INTRODUCTION

In previous papers[1,2] we considered the possibility of synchrotron magnet power supplies based on superconducting energy storage. In particular, a system was proposed consisting essentially of three concentric superconducting coils linked to the synchrotron magnet via a superconducting transformer; by rotation of one coil through approximately $180^{\circ}$ energy could be reversibly transferred to the magnet in a single operation.

In this paper we present a possible extension of this principle, in which the energy transfer device oscillates several times through $180^{\circ}$, each time being switched to a different transformer. For N operations, the synchrotron current would be increased by a factor N and the energy transferred by a factor $N^2$.

Thus, for a given magnet stored energy, the energy transfer device itself might be made much smaller at the expense of a larger (but static) transformer system and the necessity for repeated switching.

In the following sections we outline briefly the basic principles and theory of this arrangement, and make a first attempt to assess the relative merits of the two schemes.

In addition we note the possibility of a hybrid scheme in which superconducting transformers are used to extend the energy transfer capability of a conventional power supply.

## 2. BASIC PRINCIPLE

A reminder of the single-transformer arrangement is shown in fig. 1(a). $L_1L_2L_3$ are arranged concentrically, and by rotation of $L_1$ relative to $L_2L_3$ through approximately $180^{\circ}$, the current in the transformer primary is reversed while the synchrotron current increases from zero to its maximum value. By reversing the direction of rotation the current can again be reduced to zero.

Although potentially feasible and economic, the idea in this form does require the construction of rather large rotating magnet systems. A 1,000 GeV synchrotron, for example, might be powered by, say, 6 such units, each capable of transferring about $10^8$ Joules; with an internal peak magnetic field of $\sim$ 50 kG, each unit would require a coil system about 3 metres diameter. This size can, of course, be reduced by having more units, the diameter being inversely proportional to (no. of units)$^{1/3}$, but a simple calculation[2] shows that the total cost must

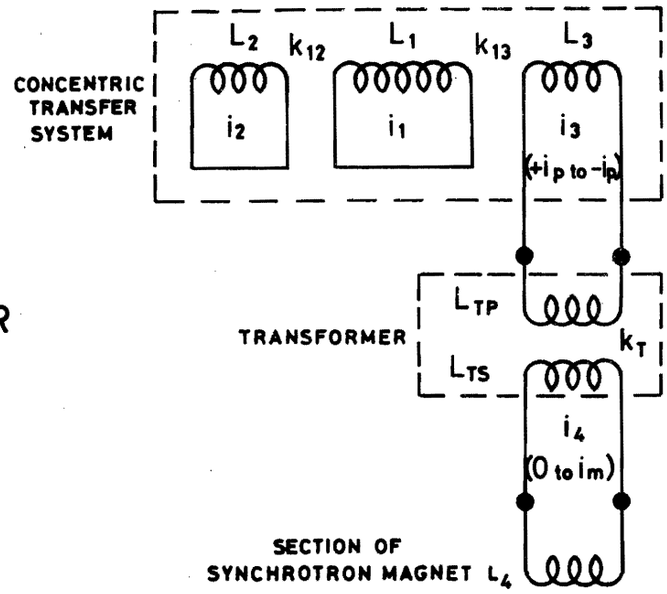


Fig. 1(a)
SINGLE-STAGE ENERGY TRANSFER

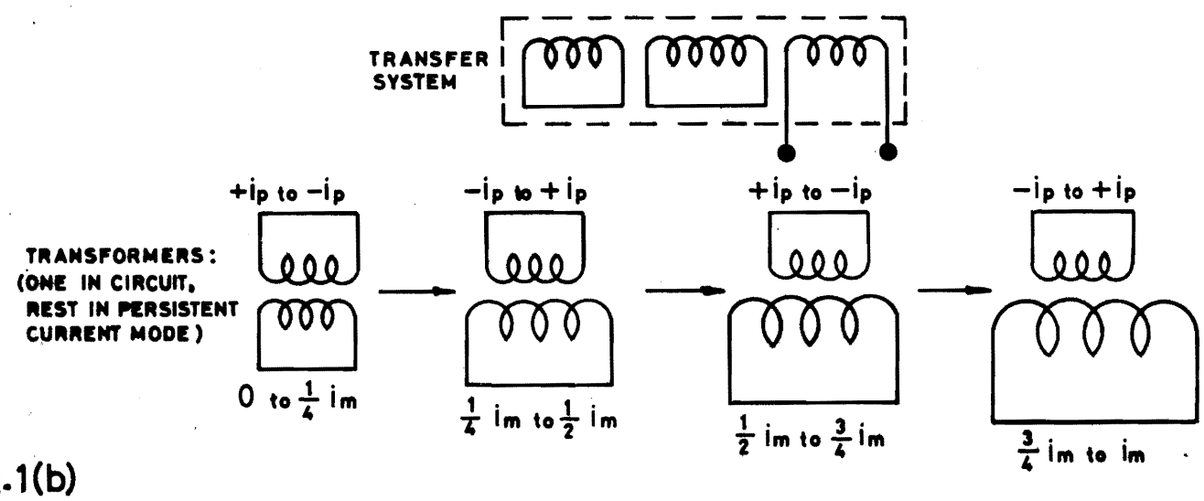


Fig. 1(b)
MULTI-STAGE ENERGY TRANSFER

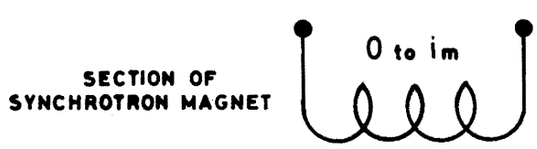


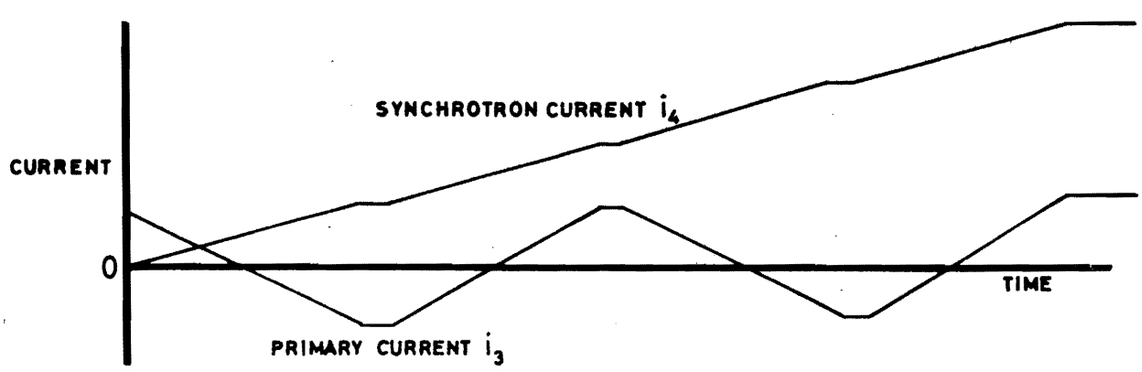

increase by about the same factor. Thus to reduce the diameter of a unit to, say, 1 metre we would have to have over 160 units at perhaps three times the cost of the six 3 metre units.

We are thus led to consider the possibility of devising schemes which allow a device of smaller capacity to cycle several times during one machine cycle. Elementary notions of 'pumping' flux in increments from a single storage magnet to the synchrotron do not satisfy the requirement of constant total energy, and therefore involve external work. We can, however, achieve constant energy multi-stage operation by using a succession of transformers as indicated in fig. 1b.

For this example we have arbitrarily assumed four stages, using four separate transformers (T1, 2, 3 and 4) each of which can be either switched into the synchrotron and energy transfer circuits, or else isolated in the persistent current mode. With the initial currents as shown the sequence of operations is as follows:

(1) T1 switched in; $180^\circ$ rotation of $L_1$ increases synchrotron current $i_4$ from 0 to $i_m/4$.

(2) T2 switched in, T1 re-isolated; minus $180^\circ$ rotation of $L_1$ increases $i_4$ from $i_m/4$ to $2\ i_m/4$.

(3) T3 switched in, T2 re-isolated; $180^\circ$ rotation of $L_1$ increases $i_4$ from $2\ i_m/4$ to $3\ i_m/4$.

(4) T4 switched in, T3 re-isolated; minus $180^\circ$ rotation of $L_1$ increases $i_4$ from $3\ i_m/4$ to $i_m$.

(5) Rotation of $L_1$ stopped to produce 'flat top' at $i_m$.

(6) Operations (4), (3), (2), (1) reversed to decrease $i_4$ from $i_m$ to zero in four stages.

The significant point is that at each changeover the currents in the two transformers are exactly matched in value, so that no disturbance occurs; but in the outgoing transformer primary and secondary currents are opposed (giving minimum internal stored energy) whereas in the incoming transformer the primary and secondary currents are aiding (giving maximum internal stored energy).

Thus the effect of each transformer substitution is to change the sign of the primary current, so that each successive $180^{\circ}$ rotation of $L_1$ will produce an increment of $i_4$ in the same direction.

In the example given, for the case in which secondary and load inductances are equal, the current ratings of the transformer secondaries are in the ratio 1:2:3:4, and their energy storage capacities in the ratio 1:4:9:16; thus, for a given peak energy in the synchrotron magnet, the required capacity of the transfer device is reduced by a factor 16 compared with the single stage circuit of fig. 1(a).

This type of scheme thus offers two possible advantages -

(I) The lower cost of the energy transfer device more than offsets the extra transformer cost, giving lower total cost.

(II) Most of the cost is now in the static transformers - which should be relatively simple to construct; the energy transfer device is now much smaller, and thus should constitute a less difficult development problem.

Following the summary of the basic theory in section 2, we discuss in section 3 the optimum size and number of transformers and estimate the resulting gains in size and cost. The obvious disadvantage is, of course, the switching problem, together with its effect on the synchrotron current waveform. These and other practical aspects are discussed in section 4. Finally in section 5 we discuss briefly a possible hybrid scheme, in which superconducting transformers are used to extend the energy transfer capability of a conventional power supply.

## 2. THEORY

### (a) Basic Relationships

We use the notation of ref. 3, summarised in fig. 1(a), with the abbreviations $\ell \equiv L_{TP}/L_3$, $m \equiv L_{TS}/L_4$ $x_1 \equiv L_1^{\frac{1}{2}} i_1$, $x_2 \equiv L_2^{\frac{1}{2}} i_2$, $x_3 \equiv L_3^{\frac{1}{2}} i_3$, $x_4 \equiv L_4^{\frac{1}{2}} i_4$.

Consider only the case $k_T = 1$ and define $c^2 = \ell/(1 + m)$. We can then obtain the following relationships from the theory in ref. 3:-

Equivalent inductance $L_e$ of transformer + load as 'seen' from $L_3$

$$L_e = \frac{L_{TP} L_4}{L_4 + L_{TS}} = \frac{L_3 \ell}{1+m} = c^2 L_3 \qquad (1)$$

Ratio of changes in $i_4$ and $i_3$ given by:

$$\left| \frac{\Delta x_4}{\Delta x_3} \right| = \frac{m^{\frac{1}{2}} \ell^{\frac{1}{2}}}{1+m} = \left[ \frac{m}{1+m} \right]^{\frac{1}{2}} c \qquad (2)$$

Ratio of current transferred to $L_4$ and (constant) current in $L_1$ (for rotation from $\theta$ to $-\theta$ with $k_{13}$ (max) $\equiv k_m$)

$$\left| \frac{\Delta x_4}{x_1} \right| = \frac{(2k_m \sin\theta) m^{\frac{1}{2}} \ell^{\frac{1}{2}}}{(1+m+\ell)} = \left[ 2k_m \sin\theta \right] \left[ \frac{c}{1+c} \right] \left[ \frac{m}{1+m} \right]^{\frac{1}{2}} \qquad (3)$$

Conditions for constant energy:

$$\begin{cases} (k_{12}^2)_{max} = (k_{13}^2)_{max} \left( \frac{1}{1+c^2} \right) \\ (x_2^2)_{max} = (x_3^2)_{max} (1+c^2) \end{cases} \qquad (4)$$

Energy stored in transformer (± sign depends on whether the internal fields of $i_3$ and $i_4$ aid or oppose)

$$E_T = \frac{1}{2} \left[ m^{\frac{1}{2}} x_4 \pm \ell^{\frac{1}{2}} x_3 \right] \qquad (5)$$

Separate energy storage capacities of $L_1, L_2, L_3$ given by:

$$\frac{E_1}{\frac{1}{2}(\Delta x_4)^2} = \left[ \frac{1+m}{m} \right] \left[ \frac{1+c^2}{2c} \right]^2 \left[ \frac{1}{k_m^2 \sin^2\theta} \right]$$

$$\frac{E_2}{\frac{1}{2}(\Delta x_4)^2} = \left[ \frac{1+m}{m} \right] \left[ \frac{1+c^2}{4c^2} \right] \qquad (6)$$

$$\frac{E_3}{\frac{1}{2}(\Delta x_4)^2} = \left[ \frac{1+m}{m} \right] \left[ \frac{1}{4c^2} \right]$$

From the above relationships we now deduce the following:-

(a) From (4), to maintain the constant energy condition we have to keep c constant (and equal to 1 for maximum energy transfer). Thus the transformer can have different values of m provided the ratio $\ell/(1 + m)$ is the same for each.

(b) From (2) the increment of current added to $i_4$ at any stage is independent of the initial value of $i_4$, and dependent on the value of m for the transformer in circuit. (This is of course physically obvious - induced currents cannot depend on the d.c. level in the secondary circuit.)

(c) The energy in the load + transformer is, before transfer

$$E_A = \frac{1}{2} x_{41}^2 + \frac{1}{2}\left[m^{\frac{1}{2}} x_{41} + \ell^{\frac{1}{2}} |x_{3M}|\right] \tag{7}$$

and after transfer (reversal of $i_3$)

$$E_B = \frac{1}{2} x_{42}^2 + \frac{1}{2}\left[m^{\frac{1}{2}} x_{42} - \ell^{\frac{1}{2}} |x_{3M}|\right] \tag{8}$$

where $x_{41}$ and $x_{42}$ are the initial and final values of $x_4$, and $|x_{3m}|$ is the maximum value of $|x_3|$ (i.e. the value at $\pm\,\theta$)

Since from (2)

$$|x_{42}| = |x_{41}| + 2|x_{3M}|\left[\frac{m}{1+m}\right]c \tag{9}$$

we find by straightforward substitution

$$E_A = E_B \tag{10}$$

Thus, since the total energy in the whole system remains constant, it follows that the initial and final energies in the transfer device are also the same. The net effect is, therefore, simply to transfer energy from the transformer to the load at each stage. Usually only part of the energy will be transferred, but it is evidently possible to choose the transformer parameter m at each stage so that the second term in (8) is zero and no energy remains in the transformer. From (8) and (9) the appropriate value of m is given by

$$m^{\frac{1}{2}} |x_{41}| + \frac{c(m-1)}{(m+1)^{\frac{1}{2}}} |x_{3M}| = 0 \tag{11}$$

Although this enables all the stored energy to be utilised it will be found to result in a slower progression of current increments, i.e. more transformers to reach a given final energy, and is thus unlikely to be of interest in practice.

## 3. ECONOMICS AND EXAMPLES

It is shown in ref. (3) that the minimum cost of a superconducting coil system (including cryogenics) must increase approximately as (stored energy)$^{2/3}$. In fact, for an approximately spherical volume of field, the cost is in the region £$E^{2/3}$ when E is in Joules, and we will assume for simplicity that this is also a reasonable indication of the combined cost of the two coupled coils in a transformer.

We thus have to write down the stored energies E of all the coils in the system (in terms of the final energy in the load), and then sum $E^{2/3}$ to get an estimate of the total cost.

Consider the simplest case of the load current increased in N equal increments ($\Delta x_4$) by means of N transformers each with the same value of m, and with c = 1. We then find, from the formulae listed in section 2:-

$$\begin{bmatrix} E_1 \\ E_2 \\ E_3 \end{bmatrix} = \begin{bmatrix} k_m^{-2} \\ 0.5 \\ 0.25 \end{bmatrix} \left[\frac{1+m}{m}\right] \left[\tfrac{1}{2}(\Delta x_4)^2\right] \tag{12}$$

Max energy of q th transformer

$$E_T(q) = m\left[q - 1 + \frac{1+m}{2m}\right]\left[\tfrac{1}{2}(\Delta x_4)^2\right] \tag{13}$$

Final energy in load $\quad E_4 = \frac{1}{2} p^2 (\Delta x_4)^2 \quad (14)$

Substituting from (14) in (12) and (13) we obtain for the energies of all the coils in the system:

$$\frac{E_4}{p^2}\left[\frac{1+m}{m}\right]\left[\frac{1}{k_m^2}, \frac{1}{2}, \frac{1}{4}\right] \qquad \frac{E_4 m}{p^2}\left[q - 1 + \frac{1+m}{2m}\right]^2$$

Energy transfer device (3 coils) $\qquad$ N transformers, q = 1, 2... N

From this expression it is immediately evident that the total transformer storage increases with N, but the required energy rating of the transfer device decreases as $1/N^2$. It is this substantial decrease in size of the rotating system which constitutes the main practical advantage. To see what typical economic gain might result, consider the case m = 1, $k_m^2 = 0.66$. Then, in terms of $E_4$ we have the following results for various values of N:-

| N | Energy transfer coils, $E/E_4$ | $\sum E^{2/3}/E_4^{2/3}$ | Transformer energies $E_T(q)/E_4$ | $\sum E_T^{2/3}(q)/E_4^{2/3}$ | Total |
|---|---|---|---|---|---|
| 1 | 3, 1, ½ | 3.7 | 1 | 1.0 | 4.7 |
| 2 | 3/4, 1/4, 1/8 | 1.5 | 1/4, 1 | 1.4 | 2.9 |
| 3 | 3/9, 1/9, 1/18 | 0.9 | 1/9, 4/9, 1 | 1.8 | 2.7 |
| 4 | 3/16, 1/16, 1/32 | 0.6 | 1/16,4/16,9/16, 1 | 2.2 | 2.8 |
| 6 | 3/36, 1/36, 1/72 | 0.3 | 1/36,4/36,9/36,15/36,25/36, 1 | 3.1 | 3.4 |

There is thus a potential overall economic gain, which could be somewhat greater than these figures indicate because of the fact that the transformers - simple optimised bifilar coils with few practical constraints - should be less expensive for a given stored energy than the type of coils required in the transfer device. In addition we note that since the energy transfer coils are now a relatively small percentage of the total cost, they can be subdivided into still smaller units without significantly increasing the overall cost.

Similar calculations could be carried out for other values of m, or for transformer sequences in which m is allowed to vary, yielding possibly somewhat more economic arrangements, but such an exercise would be largely academic at this stage in view of the approximations and other practical considerations involved.

## 4. SOME PRACTICAL ASPECTS

### (a) Switching

In the above discussion we have assumed the ability to switch rapidly and reliably from one transformer to the next without significant losses or disturbance of the synchrotron current waveform. We now consider what this means in practice.

Fig. 2 shows the switches required for the 4-transformer example. One side of each primary is connected to a common line, and two switches enable the coil to be either shorted or connected to the return line; the secondaries are connected similarly. The changeovers are then achieved by means of the 'make before break' sequence summarised in fig. 2; and are initiated when the currents in the two coils are exactly equal so that no voltage is developed during the opening of a switch. During the cycle the switches have to carry up to typically 5000A when closed, and withstand typically 5000V when open. Assuming we must limit the total energy dissipated in the switches to, say, 10% of the synchrotron magnet losses (i.e. about 10% x $10^{-4}$ = $10^{-5}$ of the transferred energy) this implies a closed resistance of less than $10^{-6}$ ohms and an open resistance of greater than $10^{6}$ ohms - and preferably an order of magnitude better than this.

So this seems immediately to rule out superconducting switches, because of the prohibitive cost of obtaining the high normal state resistance. A range of conventional techniques - low pressure, solid state, or mechanical switches - are available but have the practical and economic disadvantage that a large number of current leads have to be brought out to room temperature. The best solution suggested so far appears to be the mechanical switch operating in liquid helium; contact resistance measurements carried out by Wilson,[3] and Zar,[4] indicate that resistances better than $10^{-6}$ ohms can certainly be achieved with reasonable pressures, and this can probably be improved to $< 10^{-7}$ ohms with further development.

(b) Matching

There are at least two obvious alternative ways of ensuring equality of currents at changeover: (1) one may simply operate the switches (and programme the rotation of $L_1$) from a logical control unit in response to accurate measurements of currents in the various circuits; or (ii) one may attempt automatic operation by means of, for example, double-wound superconducting relays designed to change over as soon as the currents in the two windings become equal and opposite.

In choosing between these and other alternatives, it is evident that a vital consideration will be the overall reliability of the system - involving, for a large synchrotron, perhaps 100-200 individual switches, each operating $\sim 10^{7}$ times per year.

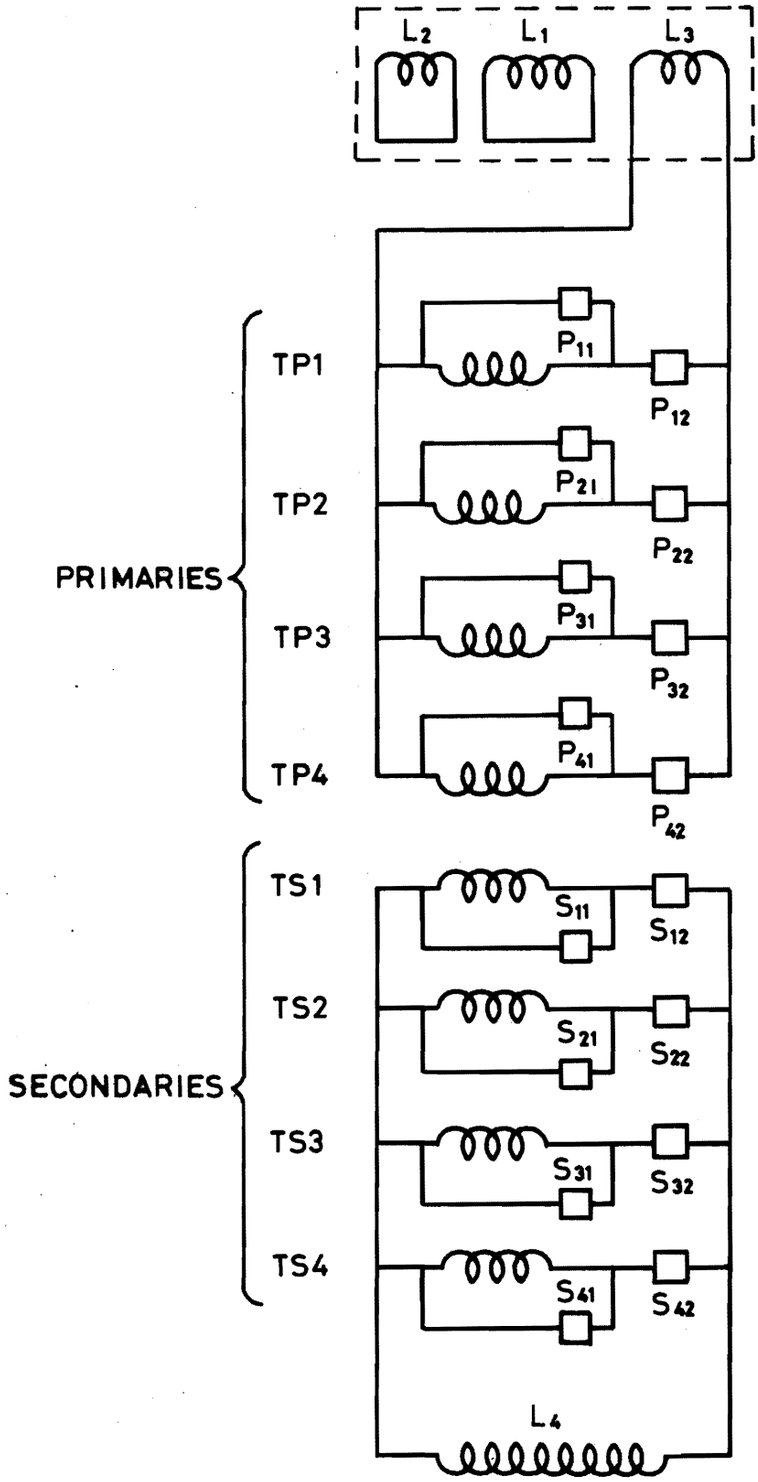


**Fig.2. TYPICAL SWITCHING ARRANGEMENT**

Primary switching sequence:

Start with $P_{12}$ $P_{21}$ $P_{31}$ $P_{41}$ closed; $P_{11}$ $P_{22}$ $P_{32}$ $P_{42}$ open

1st changeover: close $P_{11}$ $P_{22}$ then open $P_{12}$ $P_{21}$

2nd changeover: close $P_{21}$ $P_{32}$ then open $P_{22}$ $P_{31}$

nth changeover: close $P_{n1}P_{(n+1)2}$ then open $P_{n2}$ $P_{(n+1)1}$

For secondaries replace P by S. For current fall, reverse sequence.

Another question relating to the changeover problem is : what happens if the secondary circuits are not matched at exactly the same moment as the primary currents? There are, for example, small losses in each circuit (superconductor ac losses, joint resistances, etc.) these can be made up by means of continuously operating flux pumps, so that we can arrange that there are no progressive changes in the current levels, but there may be nevertheless slight short term fluctuations about the ideal theoretical current values.

Thus equality of currents could occur in the primaries slightly earlier than in the secondaries or vice versa. What happens in these two cases is shown in fig. 3, in which the time difference between primary and secondary changeovers has been exaggerated.

(1) If the secondary currents become equal first, at $t_1$, the load is switched to the secondary of the second transformer and thus, between $t_1$ and $t_2$, $i_4$ is unaffected by changes in $i_3$ and remains constant. At $t_2$ the primary currents become equal, the changeover is completed, the rotation of $L_1$ is reversed, and $i_4$ again begins to increase.

(2) If the primary currents meet first, at $t_1$, the changeover of the primaries again isolates the load from any further changes, but the continuing increase of $|i_3|$ causes the new secondary to decrease its current until at $t_2$ it equals the load current. The changeover is then completed, the rotation of $L_1$ is reversed, and $i_4$ again begins to increase.

Thus in each case (provided the rotation of $L_1$ is not reversed until both primary and secondary changeovers are complete) the net effect is to introduce a small interval $(t_2 - t_1)$ in which $i_4$ remains constant, but the cycle is otherwise unaffected. By continuous control of flux pump power, the interval $(t_2 - t_1)$ could be prevented from increasing progressively, and probably held to a value less than the switching time (< 0.1 sec.?)

(c) <u>Effect on synchrotron waveform</u>

One possible objection to the multi-stage scheme is that it is necessary to reduce di/dt to zero at each changeover, giving possible difficulties in r.f. programming, passage through resonances, etc. In addition to being required for switching, such an interruption of the current rise is in any case an inevitable consequence of the reversal of rotation (or of the passage through $90^\circ$ if it is suggested that $L_1$ should rotate continuously.)

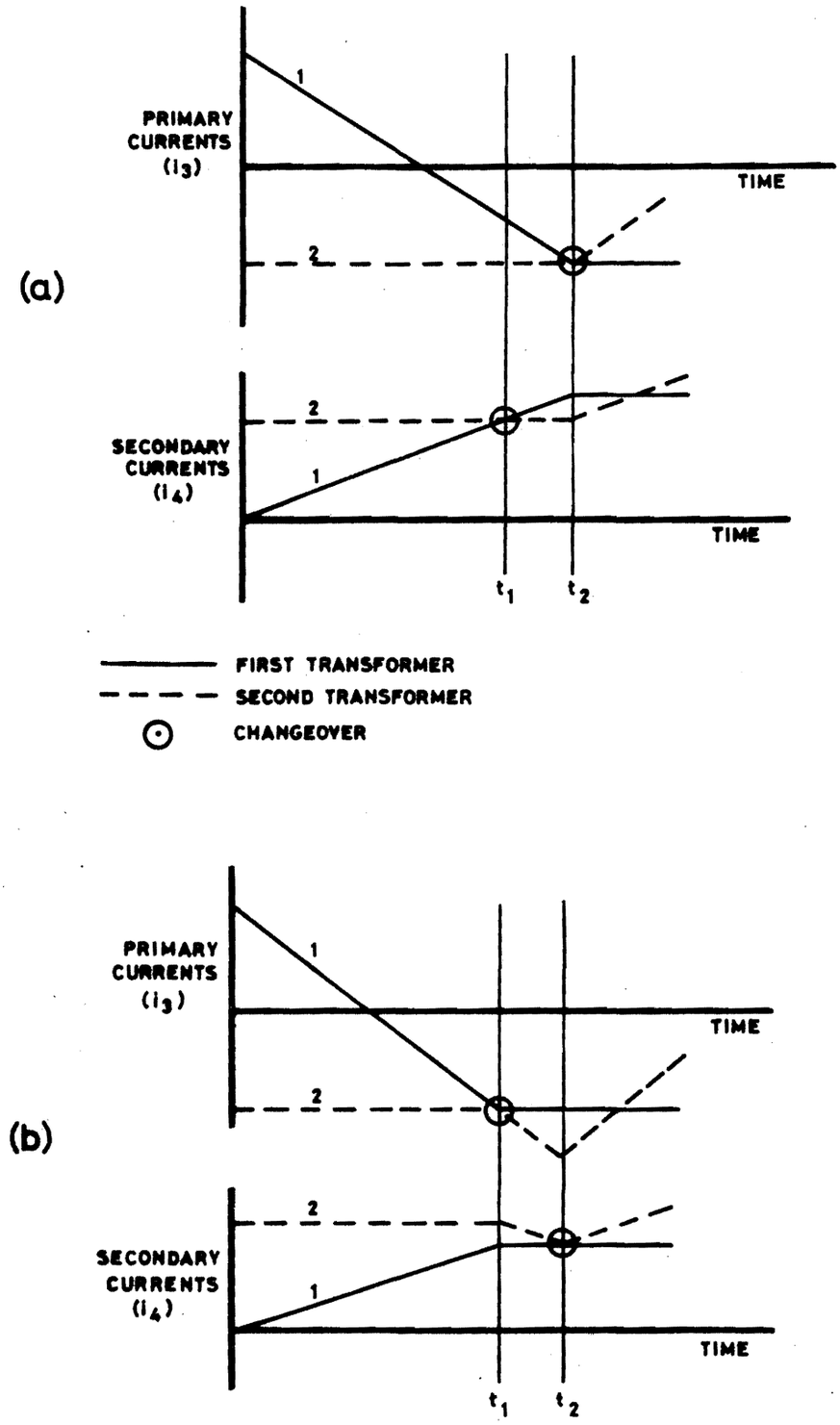


Fig. 3. EFFECT OF NON-SIMULTANEOUS SWITCHING:
(a) SECONDARY BEFORE PRIMARY
(b) PRIMARY BEFORE SECONDARY

It is possible in principle, by using additional subsidiary energy transfer circuits (conventional or superconducting) to contrive arrangements in which the changeover occurs at non-zero di/dt, so that there is no significant interruption of the current rise. However this would involve an undesirable increase in complexity of the system, and it appears preferable to accept the small platforms in the current waveform.

(d) Transformers

It will be noted that the turns ratio $n = (L_{TS}/L_{TP})^{\frac{1}{2}}$ has not entered into the theory of this system; as explained in ref. 3, this affects the ratio of peak operating currents in primary and secondary but not the transferred energy. In general it will probably be simplest to adopt n = 1, particularly as an interleaved or bifilar winding will be necessary to achieve a value of $k_T$ close to 1. Assuming the transformers have to be located in reasonably close proximity we have the problem of avoiding mutual coupling; this can be achieved by using a toroidal configuration (e.g. pancakes stacked in a circle), or perhaps sufficiently well by two adjacent opposing solenoidal transformers connected in series. It is shown in ref. 3 that the toroidal arrangement should not be significantly more expensive than the optimum sphere or solenoid.

Iron shielding might also be considered but would, of course, introduce significant non-linearity if located close to the windings.

## 5. A HYBRID SCHEME:- CONVENTIONAL POWER SUPPLY PLUS SUPERCONDUCTING TRANSFORMERS

It was shown in section 3 that all of the energy is initially stored in the transformers and the rotating device can be regarded simply as a means of transferring the energy from the transformers to the load. It can easily be shown from the basic theory that during rotation from $+\theta$ to 0 a quantity of energy $E_4/2N^2$ is absorbed into $L_2$ which is then returned to the transformer and load during rotation from 0 to $-\theta$. Thus we could equally well replace the rotating system by a conventional power supply of the same energy transfer capability. Thus supposing there exists a conventional synchrotron power supply capable of a mean energy transfer rate of up to $E_c$ Joules in T seconds; then by N current reversals in N superconducting transformers, exactly as in fig. 1(b), an energy $2N^2 E_c$ can be transferred in 2NT seconds - so that the mean rate of energy transfer has been effectively increased by a factor N. Even if not considered desirable as a final operational system, this arrangement might be attractive as part of a progressive development programme, or as a 'fall-back' option in the event of delays in development of the superconducting transfer system.

## References


1. P F Smith.Proc. 2nd Int. Conf. Magnet Technology (Oxford 1967) p 589
2. P F Smith, and J D Lewin. Particle Accelerators 1, 155 (1970)
3. M N Wilson. Unpublished measurements at Rutherford Laboratory (1968)
4. J L Zar. AVCO Everett report AMP 234 (1967)