KEK-Preprint-92-96
Fermilab Library
0 1160 0018467 5

KEK Preprint 92-96
August 1992
A

AC Loss Measurements of Rutherford Type Superconducting Cables under Mechanical Stresses

Y.Z. LEI, T. SHINTOMI, A. TERASHIMA and H. HIRABAYASHI

Presented at 1992 Applied Superconductivity Conference, Chicago, U.S.A., Aug. 23-28, 1992.

National Laboratory for High Energy Physics, 1992

KEK Reports are available from:

Technical Information & Library
National Laboratory for High Energy Physics
1-1 Oho, Tsukuba-shi
Ibaraki-ken, 305
JAPAN

Phone:	0298-64-1171	
Telex:	3652-534	(Domestic)
	(0)3652-534	(International)
Fax:	0298-64-4604	
Cable:	KEKOHO	

Presented at 1992 Applied Superconductivity Conference, Chicago, August 1992

AC LOSS MEASUREMENTS OF RUTHERFORD TYPE SUPERCONDUCTING CABLES UNDER MECHANICAL STRESSES

Y. Z. Lei*, T. Shintomi, A. Terashima and H. Hirabayashi
KEK National Laboratory for High Energy Physics
1-1 Oho, Tsukuba-shi, Ibaraki 305, Japan

Abstract--Experimental apparatus for measurements of AC losses in Rutherford type cable conductors has been constructed. A number of compacted cable samples have been measured. Hysteresis loss, loss from coupling within strands and loss from interstrand coupling are distinguished from each other. The results show that even for cables without soldering and coating, their AC losses may be quite different from each other due to interstrand coupling loss. As the curing temperature increases, interstrand coupling loss tends to increase. For some cables, interstrand coupling loss increases nearly in geometrical series with the increase of curing temperature. Most of the samples do not show evident dependence of loss on mechanical pressure.

I. INTRODUCTION

Dipole magnets for hadron accelerators have shown quite different di/dt dependences in quench currents even though they were made with similar Rutherford type cables [1-2]. It is believed that this is mainly due to the variation of interstrand coupling loss in the cables. The increase of eddy currents in the cable conductors leads to degradation of magnet performance, change of magnetic harmonics as well as increase of cryogenic load [3-5]. As the nominal ramp rates of the dipole magnets become higher and higher, the tolerable loss levels become lower and lower. Many authors have studied AC losses of Rutherford type cables having different soldering or coating materials or different surface conditions [6-9], but not much attention has been paid to the influence of mechanical pressure and curing conditions of coils. The reason why interstrand coupling loss in conductors cabled with bare strands varies in a wider range still remains unclear. In order to investigate the factors affecting interstrand coupling in more detail, an experimental apparatus has been built for measurements of AC losses in compacted cable samples under mechanical pressure perpendicular to the wider face of cable pieces. The preliminary results have already been reported [10].

II. EXPERIMENT APPARATUS

The well-known electric technique of magnetization measurement is used, which relies on a couple of balanced pick-up and cancel coils and a low drift electronic integrator. Figure 1 shows the schematics of the cold parts of the measurement apparatus we have built.

The compacted cable samples have a length of one cable transposition length of 86 mm and consists of 10 cable pieces. The pick-up coil has 2000 turns and is wound like the so-called air-core coil. The measured coupling coefficient between the pick-up coil and the samples is 0.60. The cancel coil has a similar shape but is shorter. The frame of the cancel coil is also made of high-manganese steel, which has very low susceptibility. In order to get a relatively uniform mechanical pressure on samples, two joints are used to render the upper one of the two high manganese steel plates for pressure exertion free in two directions. Special attention is paid to the design of the cancel coil in order to get good cancellation with respect not only to bias field but also to any background magnetization signal. As a result, we achieved an error magnetization loop (i.e. magnetization supposed in the sample volume when no real sample is put in) of width less than 0.02 mT.

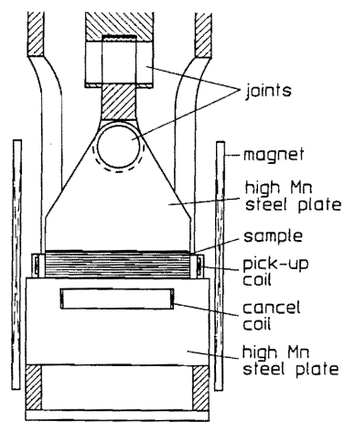

Fig.1 Apparatus for magnetization measurement

III. SAMPLES PREPARATION

Four kinds of cable conductors are used in samples preparation. Table 1 gives the specifications of these cable conductors. All the conductors except conductor H2 have nearly the same filament diameter. Conductor H2 has a filament diameter of 2.65 μm and Cu-Cu0.5%Mn matrix.

Table 1. Specifications of cable conductors

Cable ID	F	H1	H2	O
No. of strands	30	30	30	30
Fil. dia. (μm)	6	6.2	2.65	6
Matrix	Cu	Cu	Cu/CuMn	Cu
Cable width (mm)	12.125	12.125	12.125	12.34
Mean thick. (mm)	1.458	1.458	1.458	1.458
Trans. length (mm)	86	86	86	86
RRR	140	70	120	
Insul. thick. (μm)	100	100	100	150

* Visiting scientist from Institute of Electrical Engineering, Chinese Academy of Sciences

In order to investigate the influences of curing conditions on AC losses, various curing cycles are tried. Six curing temperatures and four curing pressures are selected to make a number of combinations. Curing time are decided according to curing temperature. Temperature rising speed is determined by the heating power and is about 10 °C/sec. Table 2 is the matrix of "Curing cycle ID" of all the curing cycles used.

Table 2. "Curing cycle ID" matrix

Temp.	Time	Pressure (MPa) 0	25	50	100
90 °C	15 hr			A2	
120 °C	5 hr			B2	B3
150 °C	5 hr		C1	C2	C3
180 °C	30 min			D2a	
180 °C	50 min			D2b	
200 °C	30 min			E2	
230 °C	10 min	F0		F2	F3

In total 22 compacted cable samples are prepared, among them 3 couples are prepared with the same curing cycles respectively to check reproducibility. Table 3 is a list of sample preparation information. One can find which conductor is used for preparing any one of the samples by the following way: first, get the "Cable ID" in Table 3, then, look for the conductor in Table 1. Similarly, one can find which curing cycle is used for any one of the samples by first getting the "curing ID" in Table 3 and then looking for curing cycle in Table 2.

Table 3. Preparation conditions of samples

Sample ID	Cable ID	Curing ID	Thickness after curing (mm)
1	F	A2	17.1
2	F	A2	17.0
3	F	B2	15.7
4	F	B3	16.5
5	F	C1	16.7
6	F	C2	16.7
7	F	C3	
8	F	D2a	16.5
9	F	E2	16.4
10	F	F0	17.1
11	F	F2	
12	F	F2	16.2
13	F	F3	16.0
14	H1	C2	16.6
15	H1	D2b	16.4
16	H1	F2	16.2
17	O	C3	
18	H2	B2	16.7
19	H2	C3	
20	H2	D2a	16.5
21	H2	F2	16.1
22	H2	F2	16.1

IV. EXPERIMENTAL RESULTS

A. *Preliminary Results*

All the samples are measured in 0-1T-0 bias field cycle with various field ramp rates. The losses per cycle are obtained by calculating the areas of magnetization loops. All the results are converted into joules per cubic meter conductor volume including copper. Figure 2 shows the relationship between AC losses and field ramp rate of samples 7, 14, 17 and 19. It can

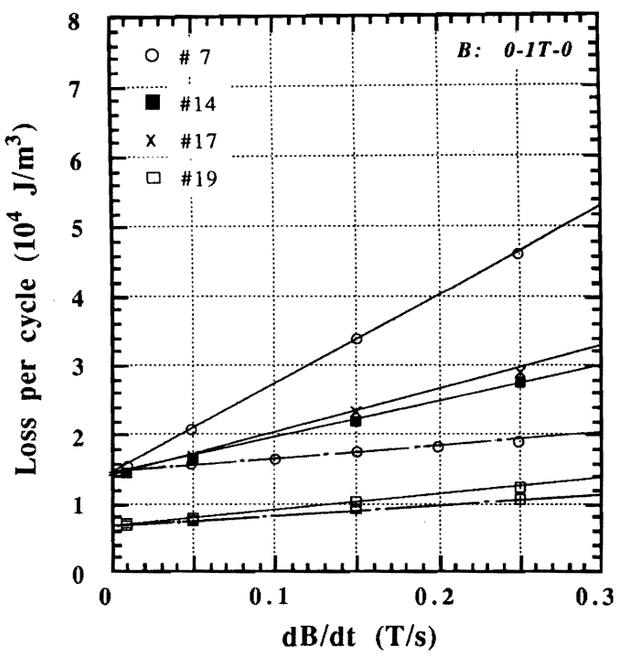

Fig.2 AC losses vs field ramp rate

be seen that the slopes of the four lines, which represent eddy current losses in the samples, are quite different from each other and, sample 7 (sample 19) has the most steep (smallest) slope. In order to subtract interstrand coupling loss from total eddy current loss, samples 7 and 19 have also been measured with the bias field parallel to the wide face of the cable pieces. The hysteresis losses in $B_{//}$ cases are 12% less than that in $B_{\perp}$ cases. To make coincidence of hysteresis losses, all the data of $B_{//}$ cases are multiplied by a factor of 1.136. The results are shown by the dotted lines in Fig. 2. Because interstrand coupling loss in $B_{//}$ cases is negligible compared with that in $B_{\perp}$ cases, the differences between the solid lines and the dotted lines correspond to interstrand coupling losses in the samples.

Interstrand coupling loss is influenced by sample length. The coefficient is a complicate function of sample length, cable transposition length and other parameters. Polak et al had studied this problem with their samples [8]. This coefficient is 0.61 for their cable conductor when the length of samples equals cable transposition length. Because we did not study this problem with our cable conductors, this coefficient has not been taken into account in this paper.

B. *Influences of Mechanical Pressure on AC losses*

The influences of mechanical pressure perpendicular to cable wide face on AC losses have been investigated. The results are shown in Fig. 3. It can be seen that, for most of the samples, the variation of AC losses with mechanical pressure is very small. The exception is sample 7, for which losses tend to decrease as pressure increases, and losses do not return to the former values when pressure is reduced.

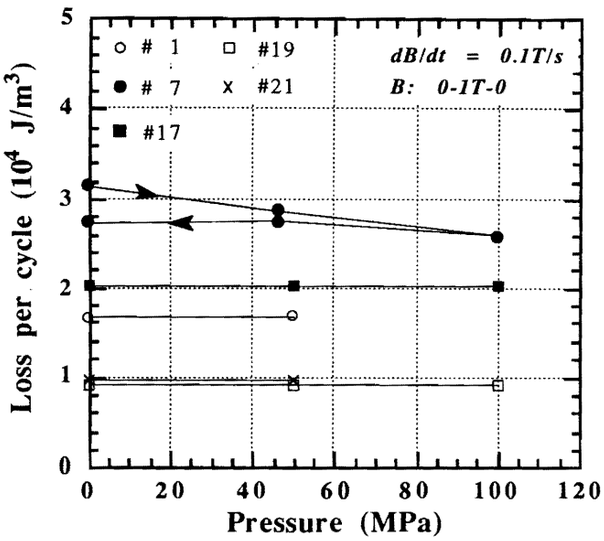

Fig.3 Influence of mechanical pressure on AC losses

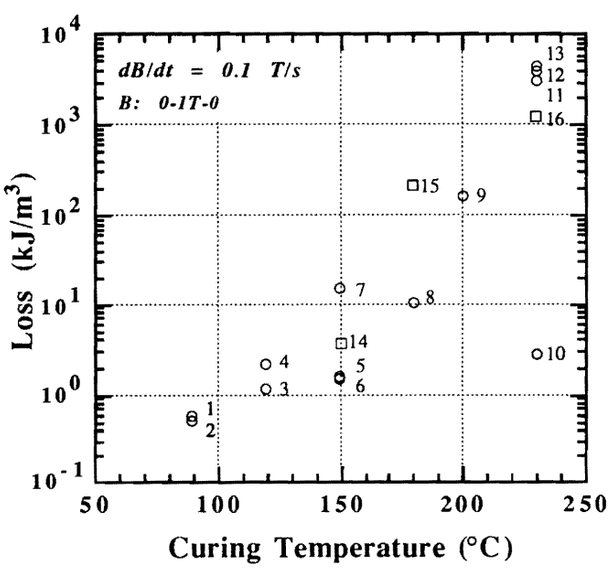

Fig.4 Interstrand coupling loss vs curing temperature of cable conductors F and H1

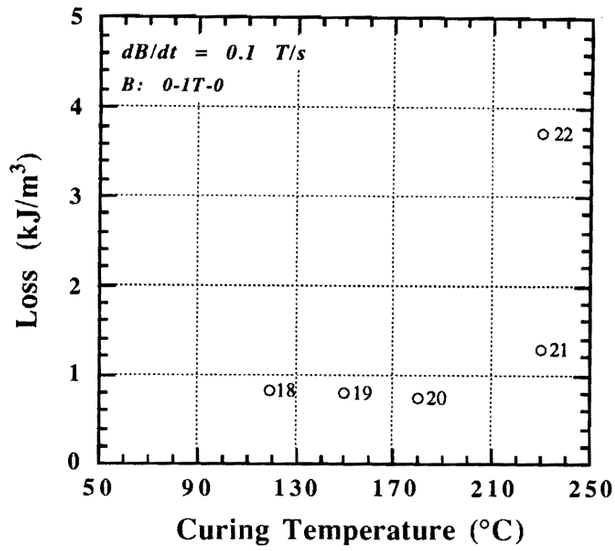

Fig.5 Interstrand coupling loss vs curing temperature of cable conductor H2

C. *Influence of Curing Conditions on Interstrand Coupling Loss*

Among the samples we have measured, some have such long eddy current time constants that we can only measure their losses at very low bias field ramp rates. Total eddy current losses are calculated from the slopes of Q-dB/dt curves. Losses at dB/dt=0.1 T/s are calculated from extension of their low ramp rate results. The results for interstrand coupling loss are obtained by subtracting eddy current loss in strands from the total eddy current loss (though not all of the samples had been measured in $B_{//}$ cases, it is believed that eddy current loss in strands does not vary very much from sample to sample). The results are shown in Figs. 4 and 5 with the curing temperatures being the horizontal axis. The numbers in the figures correspond to the sample numbers in Table 3.

As you can see, for cable conductors F and H1, interstrand coupling losses increase nearly in geometrical series with the increase of curing temperature, but for cable conductor H2, which has a filament diameter of 2.65 μm and Cu-Cu0.5%Mn matrix, interstrand coupling loss does not increase so much. We note that reproducibility of these results is good.

V. DISCUSSION

As shown in Fig.4, interstrand coupling losses of cables F and H1 strongly depend on curing temperature. The samples cured at temperature of 230 °C show quite large interstrand coupling losses. Despite scatter in the data, we can see that the increasing tendency of loss with the increase of curing temperature is concave, even though the vertical axis is logarithmic. One can also see that in the lower curing temperature region, the loss increases by nearly one order of magnitude as the curing temperature increases by 60 °C, while

in the higher curing temperature region, the increase is two orders of magnitude.

Samples 3 and 4, samples 5, 6 and 7, samples 12 and 13 are of the same cable and were cured with the same temperature respectively, but with different curing pressures. Their results do not differ so much. On the other hand, sample 10, which was cured with no pressure being applied, exhibits very small interstrand coupling loss as compared with other samples cured with the same temperature but under mechanical pressure. This may give us very important information about coil curing conditions to reduce interstrand coupling loss. This is consistent with the observation that the SSC collider prototype magnets cured at 220 °C with and without pressure show different di/dt dependences [11].

The reason that interstrand coupling losses of cables F and H1 vary by several orders of magnitude is not clear. The contrary results of cable H2 suggest that the Cu-Cu0.5%Mn matrix of cable H2 must have played an important role in preventing dramatic increase of interstrand coupling loss. It has been reported that tensile strength of oxygen free high purity copper decreases quickly when its temperature exceeds about 180 °C [12]. This is, to some extent, identical with the results shown in Fig. 4 and suggests that creep of copper may also be one of the main factors.

VI. CONCLUSIONS

1. For most of the samples, variation of mechanical pressure perpendicular to the wide face of cable pieces does not affect their AC losses very much.
2. Interstrand coupling losses of cables F and H1 strongly depend on curing temperature when cured under mechanical pressure. On the contrary, influence of curing temperature on cable H2 is very small.
3. When it is cured with no mechanical pressure, curing temperature does not affect interstrand coupling loss much.
4. Decreasing curing temperature and curing with no mechanical pressure being applied are very favourable for reducing interstrand coupling loss.

ACKNOWLEDGEMENTS

The authors hope to express their thanks to all the members of the Superconducting Magnet Group, the staff of the Mechanical Engineering Centre and the staff of the Cryogenic Engineering Centre for their great help with this work.

REFERENCES

[1] S. Delchamps, et al., "AC Loss Measurement of SSC Dipole Magnets," to be published in *Proceedings of the ICFA Workshop on AC Superconductivity*, Tsukuba, June 1992.

[2] V. Kovachev, et al., Private Communication concerning preliminary AC losses data review for HEB dipole mangets.

[3] G. Snitchler, et al., "Heat Generation and Cooling of SSC Magnets at High Ramp Rates," to be published in *Proceedings of the ICFA Workshop on AC Superconductivity*, Tsukuba, June 1992.

[4] T. Ogitsu, "Influence of Eddy Currents on Magnetic Field Harmonics," to be published in *Proceedings of the ICFA Workshop on AC Superconductivity*, Tsukuba, June 1992.

[5] G. Snitchler, R. Jayakumar, V. Kovachev, and D. Orrell, "Design and A.C. Loss Considerations for the 60 mm Dipole Magnet in the High Energy Booster," Supercollider **3**, pp. 625, Plenum Press, 1991.

[6] G. H. Morgan, "Eddy Currents in Flat Metal-filled Superconducting Braids," J. Appl. Phys., **Vol. 44**, pp. 3319, 1973.

[7] M. Wake, D. Gross, R. Yamada, and D. Blatchley, "AC Loss in Energy Doubler Magnets," IEEE Trans. Magnetics, **MAG-15**, pp. 141, 1979.

[8] M. Polak, L. Krempasky, I. Hla'snik, J. Perot, "Losses in 23 Strands NbTi and Nb_3Sn Flat Cables," IEEE Trans. Magnetics, **MAG-17**, pp. 2035, 1981.

[9] V. E. Sytnikov, G. G. Svalov, S. G. Akopov and I. B. Peshkov, "Coupling Losses in Superconducting Transposed Conductors Located in Changing Magnetic Field," Cryogenics, **Vol. 29**, pp. 926, 1889.

[10] Y.Z.Lei, T.Shintomi, A.Terashima, H.Hirabayashi, AC Loss Measurements of Rutherford Type Superconducting Cables under Mechanical Stresses, to be published in *Proceedings of the ICFA Workshop on AC Superconductivity*, Tsukuba, June 1992.

[11] M. Wake, Private Communication concerning AC losses of SSC collider dipole magnets.

[12] S. Sakai, et al.; "Recent Development of the Cu/Nb-Ti Superconducting Cables for SSC in Hitachi Cable, Ltd.," Supercollider **1**, pp. 669, Plenum Press, 1989.