KEK-Preprint-92-89
Fermilab Library
0 1160 0018451 9

KEK Preprint 92-89
August 1992
A

POSITION CONTROL TABLE FOR FFTB FINAL LENSES

N.Ishihara, T.Matsui, H.Nakayama, K.Oide, R.Sugahara, Y.Takeuchi

KEK, National Laboratory for High Energy Physics
1-1 Oho, Tsukuba-shi, 305 Japan

K.Miyashita

Naruto University of Education
Takashima, Naruto-cho, Naruto-shi, 772 Japan

K.Ishihara, A.Hayakawa, T.Kubota, S.Nakabayashi and K.Yasuda

Kawasaki Heavy Industries, Ltd.
1-1 Higashikawasaki-cho, 3-chome, Chuo-ku, Kobe-shi, 650-91 Japan

FERMILAB
NOV 04 1992
LIBRARY

Submitted to the XVth International Conference on High Energy Accelerators,
July 20-24 1992, Hamburg, Germany

National Laboratory for High Energy Physics, 1992

KEK Reports are available from:

Technical Information & Library
National Laboratory for High Energy Physics
1-1 Oho, Tsukuba-shi
Ibaraki-ken, 305
JAPAN

Phone:	0298-64-1171	
Telex:	3652-534	(Domestic)
	(0)3652-534	(International)
Fax:	0298-64-4604	
Cable:	KEKOHO	

POSITION CONTROL TABLE FOR FFTB FINAL LENSES

N.Ishihara, T.Matsui, H.Nakayama, K.Oide, R.Sugahara, Y.Takeuchi

KEK, National Laboratory for High Energy Physics
1-1 Oho, Tsukuba-shi, 305 Japan

K.Miyashita

Naruto University of Education
Takashima, Naruto-cho, Naruto-shi, 772 Japan

K.Ishihara, A.Hayakawa, T.Kubota, S.Nakabayashi and K.Yasuda

Kawasaki Heavy Industries
1-1 Higashikawasaki-cho, 3-chome, Chuo-ku, Kobe-shi, 650-91 Japan

ABSTRACT

A precision active alignment table has been constructed at KEK to support the three final lenses of the final focus test beam (FFTB) at SLAC, which will be able to achieve a vertical spot size of 60 nm. In this system, the table position is monitored by laser interferometers whose signals are used for the feedback control operating piezo transducers and motor-driven actuators. The test operation shows that the table is able to be controlled with an accuracy of 50 nm in vertical direction. Details of the table and performance are described.

1 INTRODUCTION

A final focus test beam line (FFTB) of 50 GeV energy is under construction at SLAC with the international collaboration in order to confirm the possibility of very small electron/positron beam size as 60 nm (rms) in vertical and 900 nm (rms) in horizontal at a focal point [1]. In the FFTB, final three lenses (quadrupole magnets QC1, QX1 and QC2) are mounted on a common support table as shown in the illustration of Fig.1 in order to simplify the support system. In the figure, x, y and z axes are defined with the beam direction of z. The position of the support table should be controlled dynamically with the accuracy of about 50 nm to achieve the beam position stability as one standard deviation of the beam size.

2 SPECIFICATIONS OF THE TABLE

The control table is supported by four movable legs consisting of screw jacks driven by stepping motors as coarse movers and piezo transducers as fine movers. Figure 2 shows a picture of the control table loaded with dummy weights.

The main purpose of this table is to cancel the effect of thermal deformation due to the local temperature difference. For example the temperature difference of 0.1 ℃ produces 1 μm long change for 1 m iron structure. The air temperature in the SLAC experimental room was measured to be about 15 ± 5 ℃ for 25 hours [1].

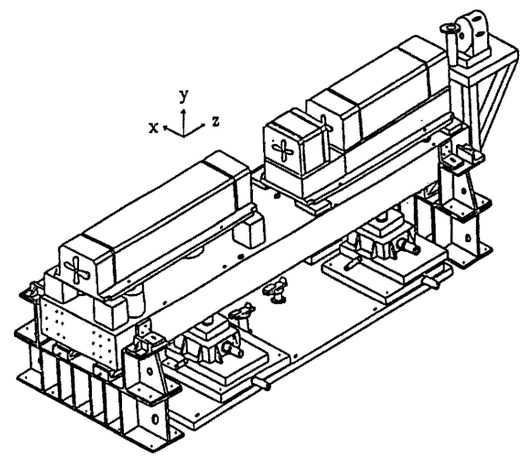

Fig.1 Illustration of the position control table and the final lenses.

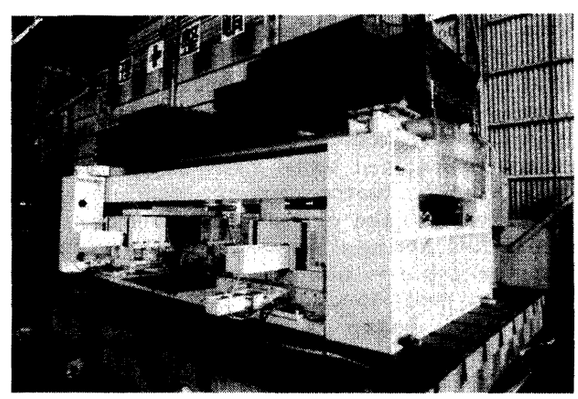

Fig.2 Position control table loaded with dummy weights.

The temperature change of 20 ℃ is expected for a long period, therefore the required dynamic range of the vertical mover is estimated to be about 400 μm for the lens system of 1.8 m height. Since the speed of such temperature change is not so fast, probably in the order of 10^{-4} ℃/sec, which corresponds to the changing speed of 1 nm/sec for the 1 m iron structure. Thus the time response of 10 nm/sec is enough to cover the changing speed.
As for the effect of ground motion, the data obtained at SLAC show that the mean amplitude of the ground motion is 35 nm [1]. Since the tolerance of the table position is 50 nm (rms), such ground motion will have no effect on the table position [2]. The main parameters of the control table are listed in table 1.

Table 1 Main parameters of the control table.

Table			
Load capacity		8 t	
Size		1000(W)×4530(L)×450(H) mm³	
Empty weight		16 t	
Material		Iron JIS-SS400 modified	
Natural frequency		90 Hz	
Mover			
Dynamic range		10 mm	
Time response		>10 nm/sec	
Precision of movers			
	Coarse	Fine	Tolerance
x	2 μm	50 nm	500 nm
y	2 μm	50 nm	50 nm
z	2 μm	———	>10 μm
θ_x	2 μrad	0.5 μrad	>1 μrad
θ_y	2 μrad	0.5 μrad	>1 μrad
θ_z	5 μrad	0.5 μrad	1 μrad

As mentioned previously, there are coarse and fine movers. The degrees of freedom of the coarse movers are six, x, y, z, θ_x, θ_y and θ_z, where θ_i stands for the rotation around the i-axis. On the other hand the ones of the fine movers are five with the lack of z-translation because of the large tolerance. The coarse movers are mainly used for the initial alignment of the table. Their dynamic ranges are designed to be 10 mm in all directions so that the coarse movers can cover the misalignment of the order of 1 mm in the initial installation. At the final stage, the coarse movers bring the table within the dynamic range of the fine mover, about 15 μm.
The control system is as shown in Fig.3. The controller consists of VME boards of central processor unit (CPU), digital to analog converter (D/A), analog to digital converter (A/D), parallel input and output (PI/O), digital input (DI) and output (DO) [3]. An MC68020 is used for the CPU with a clock signal of 20 MHz to obtain a sampling time of 2 msec.
An ordinary operation uses the combination of fine and coarse movers, and therefore the movers are able to determine the table position in the accuracy of 50 nm (rms) with the dynamic range of 10 mm. When the table position is changed by a disturbance like a thermal expansion, position sensors detect the change and the CPU of the controller calculates the distance to cancel the position change and then drives movers to keep the table position stable. When we change the set value of the table position by operating a touch panel, which is located at the SLC main control room together with the VAX computer, the command goes through Ethernet to a personal computer (PC) to change the set parameter of the VME controller.

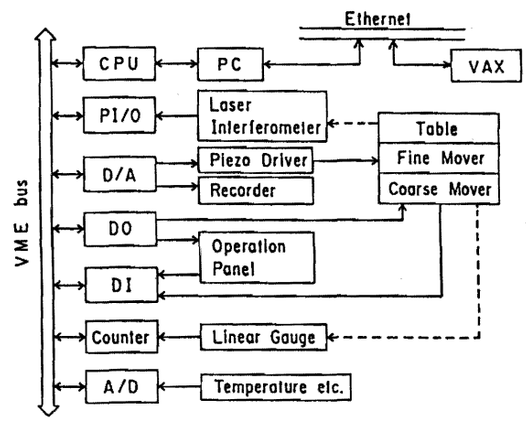

Fig.3 Block diagram of the control system.

3 PERFORMANCE OF THE CONTROL TABLE

Since the direct disturbances have not been applied to the table, performance tests to check the dynamic characteristics have been made as shown in the block diagram of Fig.4.

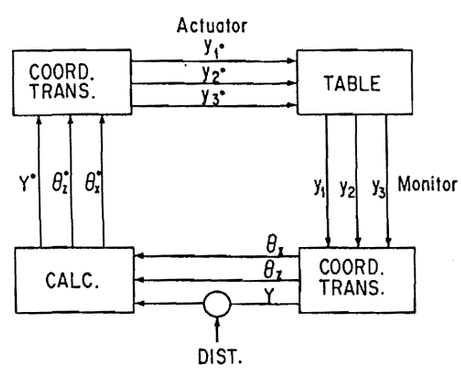

Fig.4 Block diagram of the performance test for the sine wave disturbance of y direction.

Three different points of the table, y_1, y_2 and y_3 are monitored by three laser interferometers with the accuracy of 20 nm (rms). Three values are transformed into the table position y, θ_x and θ_z by the CPU of the controller. When we add the sine wave disturbance to the y, for example, by a software method, the compensating amount y^* is calculated to keep y position stable. The calculated numbers, y^*, θ_x^* and θ_z^* are transformed into the vertical set positions of the monitor points, y_1^*, y_2^* and y_3^*, and then four movers bring the table to the set position.
The obtained results of y and θ_z directions are shown in Fig.5 (a) and (b), respectively, for the sine wave disturbance of 0.1 Hz .

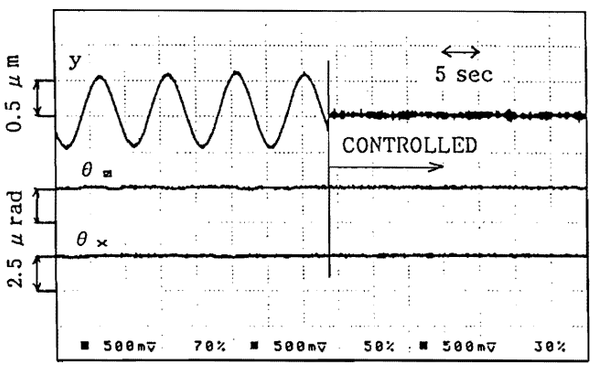

(a) y direction

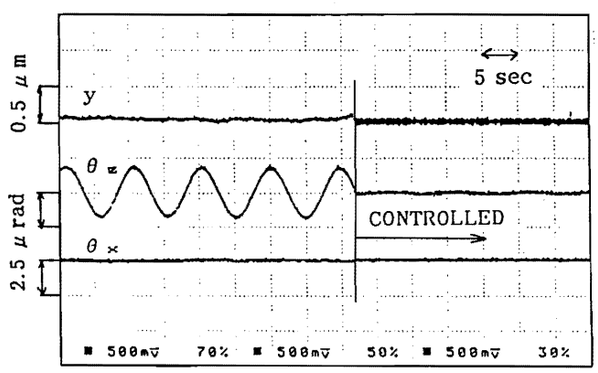

(b) θ_z direction

Fig.5 Test results for the sine wave disturbance of 0.1 Hz.

The result of θ_x is quite similar to the one of θ_z. These figures show that the position resolution in y direction is about 36 nm (rms), the time response about 200 nm/sec and the rotation resolutions are 0.2 μrad (rms).
The results of the performance tests are also described in table 2. The damped ratio of better than 20 dB has been obtained for every direction at less than 0.1 Hz. Since the actual disturbance due to the temperature change will be much slower than 0.1 Hz, we can expect that the present table fulfills the required conditions.

Table 2 Performance of the control table

	Frq. (Hz)	Dist. amp. p-p	Cont. amp. p-p	Damped ratio (-dB)
y	0.1	1.0 μm	0.10 μm	-20.0
	0.5	1.0 μm	0.12 μm	-18.1
	1.0	1.0 μm	0.21 μm	-13.6
θ_x	0.1	4.0 μrad	0.36 μrad	-20.9
	0.5	4.0 μrad	1.07 μrad	-11.5
	1.0	4.0 μrad	1.79 μrad	-7.0
θ_z	0.1	4.0 μrad	0.36 μrad	-20.9
	0.5	4.0 μrad	0.86 μrad	-13.4
	1.0	4.0 μrad	1.38 μrad	-9.2

4 CONCLUSION

The position control table has been constructed and tested at KEK for the final lenses of FFTB. The test operation shows that the table is able to be controlled with the position resolution of 36 nm (rms) in y direction, the time response of 200 nm/sec and the rotation resolution of 0.2 μrad (rms), which fulfill the required specifications.

Acknowledgement

The authors thank Prof. H.Sugawara, Prof. S.Iwata and Prof. Y.Kimura for their encouragement.

References

[1] FFTB Project Design Report, Sep. 1990, SLAC

[2] Ishihara, N., "Status of JLC Active Alignment Studies" in Proceedings of the 2nd Workshop on Japan Linear Collider, KEK, Nov.6-8, 1990, pp. 77-87.

[3] Ishihara, N. et al., "A Position Feedback Control System for the Test Facility of JLC" in Proceedings of the International Conference on Accelerator and Large Experimental Physics Control Systems, KEK, Nov.11-15, 1991