KEK-Preprint-92-74
Fermilab Library
0 1160 0018461 8

KEK Preprint 92-74
August 1992
A

SUPPORT TABLE SYSTEM FOR THE TRISTAN SUPERCONDUCTING QUADRUPOLE MAGNETS

R. SUGAHARA, H. FUKUMA, A. KABE,
K. EGAWA, K. ENDO, Ta. KUBO, Y. MORITA, Y. OHSAWA, N. OHUCHI, T. OZAKI, K. TSUCHIYA

NOV 0 1992
LIBRARY

Contributed to the 15th International Conference
on High Energy Accelerators
Hamburg, Germany, July 20 - 24, 1992

National Laboratory for High Energy Physics, 1992

KEK Reports are available from:

Technical Information & Library
National Laboratory for High Energy Physics
1-1 Oho, Tsukuba-shi
Ibaraki-ken, 305
JAPAN

Phone:	0298-64-1171	
Telex:	3652-534	(Domestic)
	(0)3652-534	(International)
Fax:	0298-64-4604	
Cable:	KEKOHO	

SUPPORT TABLE SYSTEM FOR THE TRISTAN SUPERCONDUCTING QUADRUPOLE MAGNETS

R. SUGAHARA, H. FUKUMA, A. KABE,
K. EGAWA, K. ENDO, Ta. KUBO, Y. MORITA, Y. OHSAWA, N. OHUCHI, T. OZAKI, K. TSUCHIYA

KEK, National Laboratory for High Energy Physics, Oho 1-1, Tsukuba-shi, Ibaraki-ken, 305, Japan

ABSTRACT

Superconducting quadrupole magnets (QCS magnets) for the mini-beta scheme were installed at four interaction points in the TRISTAN electron-positron collider. Those QCS magnets are supported by precision tables, which can be moved in four directions remotely by the touch panel at the central accelerator control room. The support tables can be moved horizontally (X direction) and vertically (Y direction) in the plane perpendicular to the beam axis, and can be rotated around the X and the Y axes. The minimum step of the movement is one micro-meter, and that of the rotation is 3 μrad. By adjusting the position of the QCS magnets, the closed orbit distortion was minimized. The hardware system and the software system of the support tables are described.

1 INTRODUCTION

In order to upgrade the TRISTAN electron-positron collider from the low beta scheme to the mini-beta scheme, superconducting quadrupole magnets (QCS magnets)[1-4] were installed at the both sides of each four colliding point. In the mini-beta scheme, β_y^* is reduced from 0.1m to 0.04m and β_x^* from 1.8m to 1m, and the luminosity was to be increased 2.1 times the value in the low beta operation. The new operational scheme requires rather high precision in the alignment of the QCS magnets: 20μm in X and Y directions and about 0.1 mrad in the rotation around the X and the Y axes. Here the X and the Y axes are defined as the horizontal and the vertical directions perpendicular to the beam axis (Z axis). The QCS magnet has the length of 1.8m and the weight of about 1.5 tons. The head end is located 2.3m far from the interaction point. The head of the magnets is inside the detector, and the head cylinder, in which the coil is placed, is surrounded by thick iron return yoke of detectors in the TOPAZ and VENUS region. The QCS magnets can be attracted by the strong magnetic force caused by the interaction between the QCS coil and the solenoidal leak field of detectors and also by the interaction between the QCS leak field and the ion return yoke of detectors. In order to adjust the displacement caused by these magnetic forces, the capability of the rotation around the X and the Y axes is provided. As the space is very limited, the QCS magnets and the support tables had to be made as compact as possible.

2 HARDWARE SYSTEM

The picture of the QCS magnet fixed on the support table in the VENUS region is shown in Fig.1. The VENUS detector

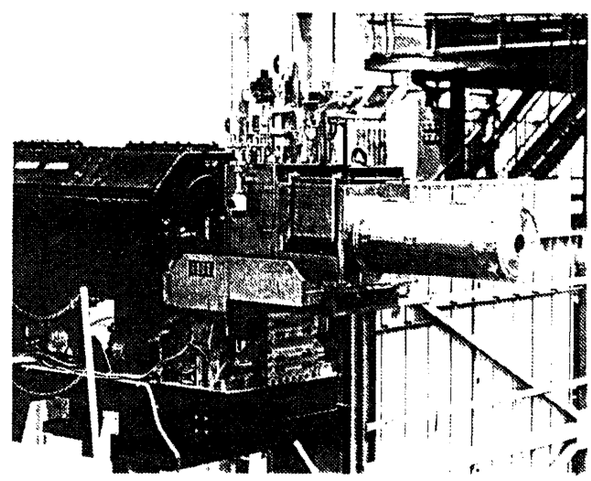

FIGURE 1 QCS magnet supported by the precision movable table.

was rolled out at that time. The QCS magnet has to be placed as close as possible to the interaction point , and the support table has to remain outside the detector. So the center of mass of the QCS magnet is off from the support table, and the magnet can easily shake at the time of the earthquake and

break the beam pipe. The vibration of the support tables was tested carefully on the three dimensional vibration table by simulating typical earth quakes. The mechanical structure was added to make the vibration less than 1mm at the time of the strong earthquake of the magnitude of 7.7.

2.1 MECHANICAL STRUCTURE

The structure of the support table is shown schematically in Fig.2. Fig.3 shows the picture of the support table. It has four stages: X, Y, θ_x and θ_y stages from bottom to top. Here θ_x and θ_y are the rotational angles around the X and the Y axes respectively. Each stage is moved by a stepping motor with a harmonic drive and the movement of the X and the Y stages is guided by L-M guides (Linear Motion guides of THK Co. Ltd.). The θ_x stage is moved up and down at one edge of the stage, and at the other edge is installed a rotation axis. The top most θ_y stage is moved forward and backward at one edge of the stage, and the movement of the stage is guided by guide bearings (cross roller bearings) arranged circularly on the θ_y stage. The lever arm lengths are 35cm and 40cm for θ_x and θ_y rotation respectively. In each movement the speed is raised gradually up to the top speed in the first four seconds, and is decreased gradually near to the destination. The speed is 30 μm/sec and 10 μm/sec in X and Y directions respectively. In the rotation, it is 0.1 μrad/sec and 0.025 μrad/sec in the the θ_x and the θ_y rotations respectively. Coordinates in four directions are measured by linear gauges of optical scales with the least count of 1μm. The motor is stopped when the coordinate reaches the

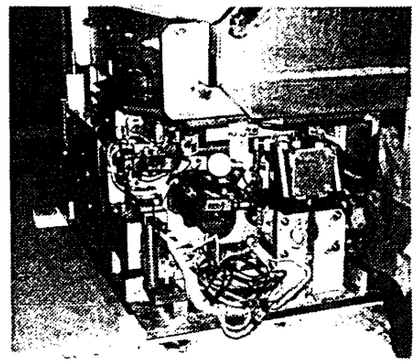

FIGURE 3 Picture of the support table.

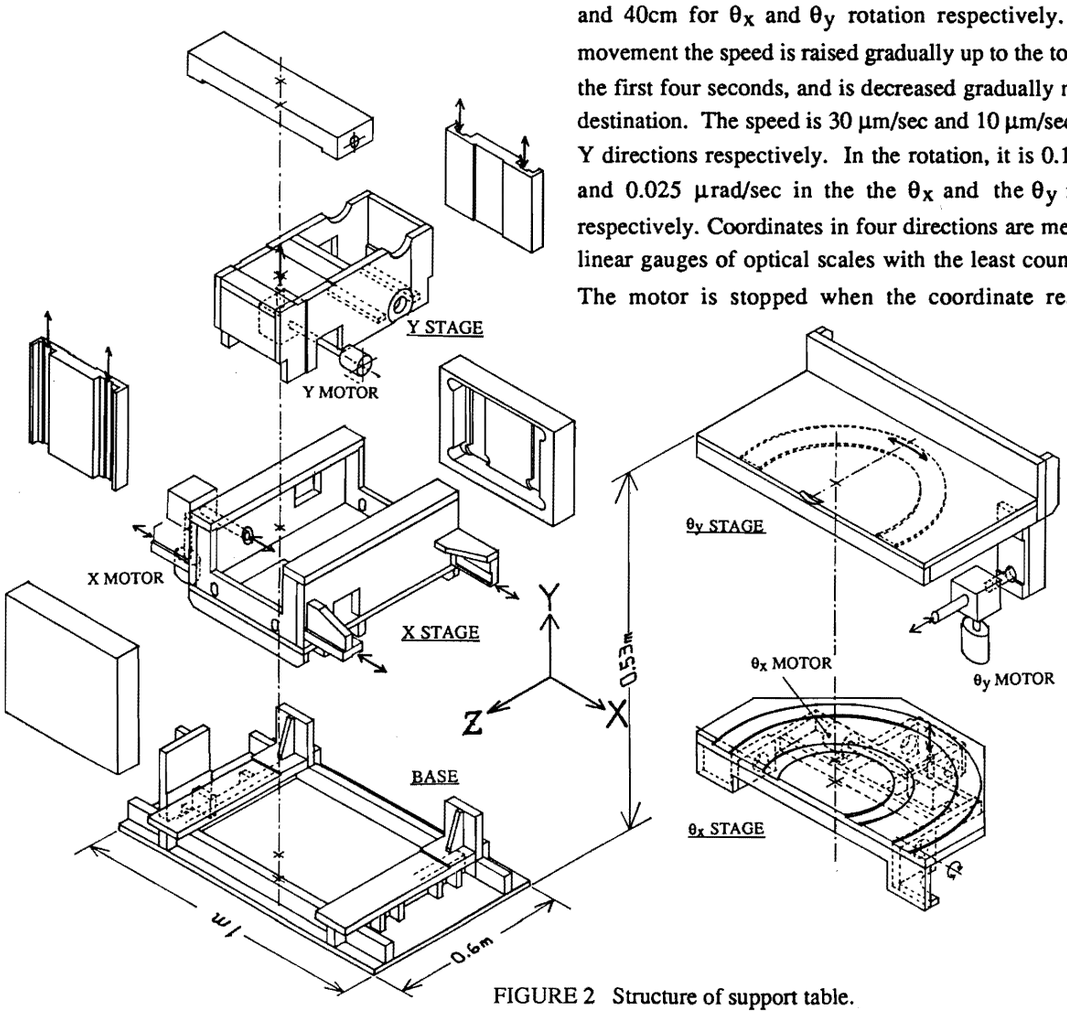

FIGURE 2 Structure of support table.

destination value. In this way the stop position is within two digits of linear gauges from the destination. As the precision of the linear gauge is 3μm, the precision of the movement is about 4μm. Each stage is pushed towards one side by the pressurized air of 6 atm. in order to avoid the backlash.

The weight of the support is about 2 tons. The most material is SUS 316, the non-magnetic material, except for guides and motors. Four dial gauges are equipped as well to check the position of each stage by eyes. Those dial gauges have the capability of issuing the lower and the upper limit signals, which are used to limit the movement within ±1mm from the initial setting position not to touch the beam pipe. The gap between the outer surface of the beam pipe and the inner surface of the QCS magnet is only 2mm when the beam pipe is located at the center of the QCS magnet.

A pair of mechanical limit switches is installed in each stage as mechanical stoppers. Also each stage has the origin switch. When the "reset origin" command is issued, the stage starts moving towards the origin switch. At the time when the stage reaches the origin switch, the coordinate counter is reset to the value preset by the preset switches. The precision of this origin reset is about 10μm. With this origin reset capability the coordinate is reset at the time of the electronics malfunction. The origin reset switches are located within 1mm from the initial setting position.

2.2 CONTROL SYSTEM

The support table is controlled remotely through CAMAC modules. The diagram for the control system is shown in Fig.4. The local controller, placed close to the support table, receives commands or coordinates of a destination from CAMAC modules located in the QCS local control room, drives stepping motors, and transfers status signals and coordinates to CAMAC modules. The local controller has the preset counters for each axis, and coordinates can be reset to those preset values by pushing preset button on the controller or sending the preset command. The local controller can sustain for about 5 minutes at the time of the electronics power break down.

CAMAC modules are connected to the CAMAC serial highway link, and is accessible at the central control room through the accelerator control system as well as at the QCS local control room.

3. SOFTWARE SYSTEM

There are two software systems. One is the system written in the BASIC language for NEC PC-9801 personal computers, which are connected directly to the auxiliary crate controller (CC/7000 module of Toyo Coop.) installed in the CAMAC crate in the QCS local control room. The control panel on the display is shown in Fig.5. Using the cursor and functional keys, F1-F10, an operator can move the support table or can see coordinates or status of the table.

The other is the touch panel in the accelerator control system[5], which is controlled by Hitachi HIDIC mini-computers. The touch panel for the QCS support table is shown in Fig.6. When an operator touches the "SET REL" (setting the coordinate of a destination in the relative mode) or "SET ABS" (setting in the absolute mode) button, the setting panel for the destination is displayed. Finishing the setting of the destination, "GO", "STOP" and "CANCELL" buttons appear. In this way an operator can move the support table or see coordinates or status of the table by touching a button. An operator can also print or save the current position of QCS magnets. Control computers are connected to the Data

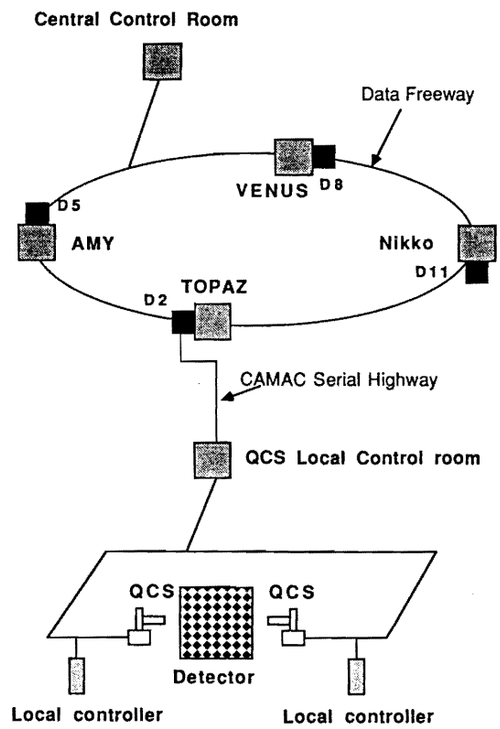

FIGURE 4 Control System for the QCS Support Table.

QCS Control V1.1 QCS-L

Axis	Current Position	Movement	Limit+	Limit-	Over T
● X	29.997	→ 0.020	O.K.	O.K.	O.K.
Y	29.998	0.000	O.K.	O.K.	O.K.
θx	29.996	0.000	O.K.	O.K.	O.K.
θy	29.999	0.000	O.K.	O.K.	O.K.
Hx	29.908				
Hy	30.004				

X AXIS to be moved 0.020 Rel. coord Air pressure O.K.

START	STOP	L/R	Rel/Abs	LOCK	UNLCK	ORIGIN	LIMIT	RESET	QUIT
F1	F2	F3	F4	F5	F6	F7	F8	F9	F10

FIGURE 5 Panel for the local control.

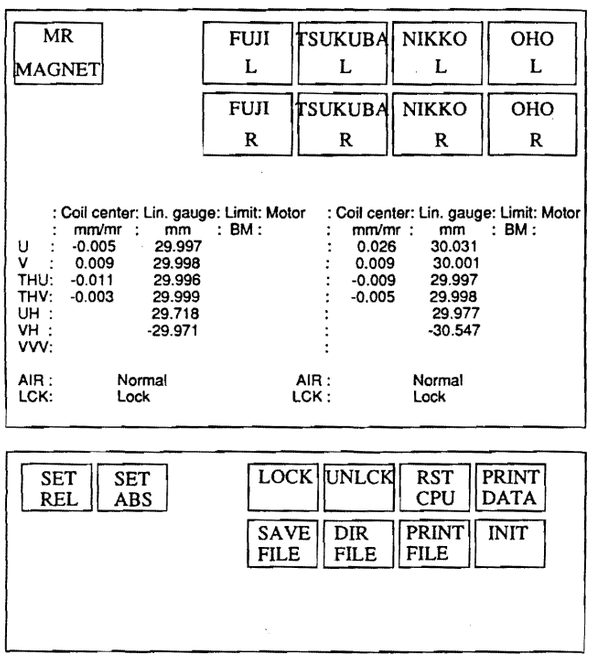

FIGURE 6 Touch panel for the QCS support table.

Freeway link, and those can communicate each other. When some button is touched, the computer at the central control room calls a corresponding program resides in the local computer located at each colliding region. Those programs are called "data modules". A local computer is accessible to the CAMAC modules in the QCS local control room. Data modules issue command to or read information from CAMAC modules, and transfer data to the computer at the central control room.

4. CONCLUSION

In order to meet the requisition for high precision in the QCS magnet alignment of 20μm in X and Y directions and about 0.1 mrad in the rotation around the X and the Y axes, QCS magnets were supported by high precision movable tables. This support can be moved remotely at the QCS local control room and the central accelerator control room as well. By adjusting the position of QCS magnets at the precision of about 4μm the closed orbit distortion was minimized, which helped in tuning the mini-beta scheme. The support tables have already experienced earth quakes of the middle class of 3-4 magnitude several times, the position of the QCS magnets were not changed. The QCS tables have been supporting the QCS magnets firmly and reliably. Now experimental data is being accumulated constantly at the rate 0.8-1.0 events/pb/day, which is about twice the value in the previous low beta operation.

REFERENCES

[1] Endo, K. et al., "Mini-beta Superconducting Quadrupole Magnet System for the TRISTAN Main Ring", KEK-PREPRINT-91-69, Jun. 1991; Contributed paper to the 12th International Conf. on Magnet Technology, Leningrad, U.S.S.R., Jun. 23-28, 1991.

[2] Endo, K. et al., "Superconducting Quadrupole Magnet System for TRISTAN Mini-beta Insertions", KEK-PREPRINT-91-33, May 1991; Contributed to the 1991 IEEE Particle Accelerator Conf., San Francisco, CA, U.S.A., May 6-9, 1991.

[3] Tsuchiya, K. et al., "Performance of the Eight Superconducting Quadrupole Magnets for the TRISTAN Low Beta Insertions", KEK-PREPRINT-90-124, Oct. 1990; Presented at Applied Superconductivity Conf., Snowmass, Co., U.S.A., Sep. 24-28, 1990.

[4] Tsuchiya, K. et al., "Super conducting Magnet System for the TRISTAN Low Beta Insertion", KEK-PREPRINT-90-56, Jun. 1990; Presented at European Particle Accelerator Conf., Nice, France, Jun. 12-16, 1990.

[5] Kurokawa, S. et al., "Control System of TRISTAN", KEK-PREPRINT-85-44, Oct. 1985, Contributed paper to 2nd International Workshop on Accelerator Control System, Los Alamos, N. Mex., U.S.A., 1985, Nucl. Instr. Meth. A247 pp. 29, 1986.