Internal Report
DESY M 98-10
September 1998

FERMILAB
NOV 17 1998
LIBRARY

DESY-M-98-10

Operation of a HV Pulse Modulator at the S-Band Test Facility at DESY with a Constant Current Capacitor Charging Power Supply*

Fermilab Library
0 1160 0067997 1

S. Choroba, J. Hameister, M. Kuhn

Deutsches Elektronen-Synchrotron DESY, Hamburg, Germany

NAME	I D No.	M.S.

RETURN TO FERMILAB LIBRARY

* presented at the 1998 Third Klystron-Modulator Workshop, June 29 – July 2, 1998, SLAC, Stanford, USA

DESY behält sich alle Rechte für den Fall der Schutzrechtserteilung und für die wirtschaftliche Verwertung der in diesem Bericht enthaltenen Informationen vor.

DESY reserves all rights for commercial use of information included in this report, especially in case of filing application for or grant of patents.

"Die Verantwortung für den Inhalt dieses
Internen Berichtes liegt ausschließlich beim Verfasser"

Operation of a HV Pulse Modulator at the S-Band Test Facility at DESY with a Constant Current Capacitor Charging Power Supply

S. Choroba, J. Hameister, M. Kuhn, DESY

Abstract

The S-Band test facility at DESY is a 400MeV electron linac which serves for the development and the evaluation of components which might be used for an S-Band linear collider. The linac has three 6m long accelerating sections which are supplied with RF power at 2.998GHz generated by two S-Band klystrons capable of 150MW at a pulse duration of 3μs and a repetition rate of 50Hz. The beam power for the two klystrons is produced by two high voltage pulse modulators which generate high voltage pulses of 535kV at 700A at a flat top pulse duration of 3μs. Both systems are line type modulators. Their pulse forming networks (PFN) are charged by the conventional resonance charging method. In order to improve the efficiency and to reduce the space required by the system we installed a constant current capacitor charging power supply at one of the modulators. This type of power supply charges the PFN of a modulator with a constant current to the required voltage. No charging choke or voltage doubling is necessary. Because of the characteristics of small size and high efficiency this type might be suitable to supersede the resonance charging scheme at a linear collider.

This paper presents the modulator modifications required to meet the demands of the new type of PFN charging. It also reports results of the measurements and the operation experience up to now.

Introduction

The HV pulse modulators at the S-Band test facility have to provide the beam power for the 150MW klystrons at the test facility. The parameters of the modulators are listed in table 1. Figure 1 shows the basic circuit diagram.

Pulse Voltage	535 kV
Pulse Current	700 A
Flat Top Pulse Duration	3 μs
Repetition Rate	50 Hz
Equivalent Square Wave Duration	4.8 μs
Rise Time 10 - 90 %	700 ns
PFN	four lines parallel, each line ten sections
PFN Impedance	1.34 Ω
Total Capacitance	1.8 μF
Capacitor Capacitance	45 nF
Coil Inductance	1.3 μH
Charging Voltage	50 kV max.
Peak Current (primary side)	16 kA
Pulse Transformer Ratio	1 : 23

Table 1. Parameters of the HV pulse modulators

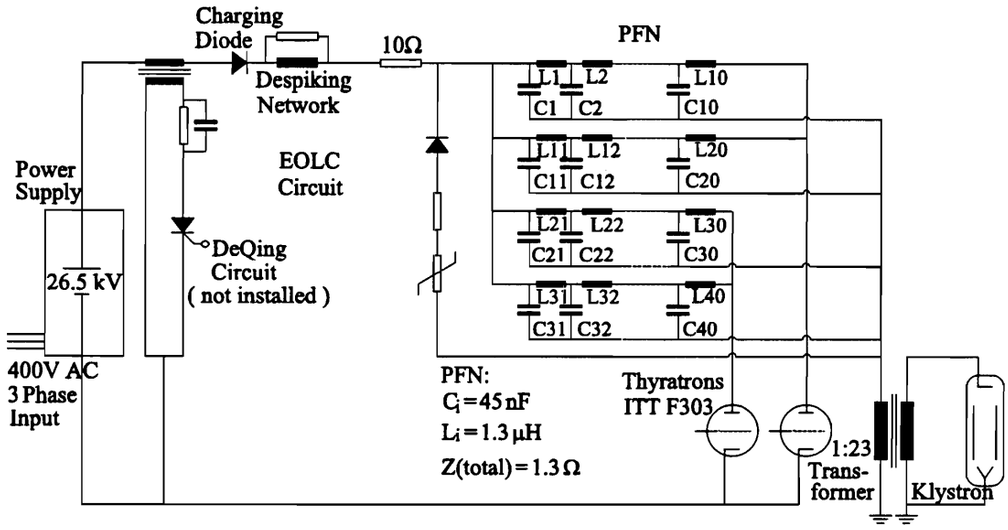

Figure 1: Basic circuit diagram of the modulator using the resonance charging method

The charging system consists of a 26.5kV DC HV power supply capable of an average current of 5A, a charging choke of 16H and a charging diode which blocks a voltage up to 80kV. The PFN is charged from zero to the double of the DC power supply output voltage by a sinus half wave charging current of 17ms duration, which is short enough to operate the modulator at repetition rate of 50Hz.
Although the charging choke was constructed with secondary windings to make the installation of a DeQing system for a good pulse to pulse stability possible, this system was not installed. The DC HV power supply already allows a pulse to pulse stability better than 0.5%, which is sufficiently small.
The total efficiency of the charging path from the mains to the PFN is 88%, of which the power supply efficiency is 94% and the efficiency of charging choke and diode is 94%, too. The main losses in the charging path are from losses in the 90Ω resistance of the charging choke and due to eddy currents in the choke and the neighbourhood of the choke which is effected by stray fields.
The size of the power supply is 1.4m times 1.85m wide, 2.25m high, the size of the charging unit, which accommodates basically the charging choke and diode and the despiking network, is 1.35m times 1.45m wide and 2.45m high. More details can be found in [1].

In order to increase the efficiency and to reduce the space required by these components, we decided to install a constant current capacitor charging power supply, which could be used alternately with the existing charging system. Capacitor charging power supplies in the some tens of kJ/s range are now available from some companies. These power supplies promise an efficiency of 92% or higher and have a compact size. They charge the capacitors of a PFN to the required voltage with a constant current without the use of a charging choke and diode and without doubling the output voltage. One of the manufacturers of this type of power supply is Maxwell, San Diego, USA. Power supply modules up to a voltage of 50kV and a power rating of 10kJ/s (Maxwell CCDS series) are available. Each of the modules is 222mm high and 508mm deep and fits in a 19 inch rack.

For a first test we ordered three modules (50kV / 10kJ/s) which are sufficient for a modulator operation at a repetition rate of 12.5Hz. The total power might be extended later to meet the requirements of a modulator operation at full output power by adding more modules. Twelve parallel modules would be sufficient to operate one modulator at full power.

In the following we describe the modifications which were made in order to install the constant current capacitor charging power supply. After that we present the results of our measurements.

Modifications

One of the requirements on the installation of the constant current charging power supply was, that we wanted to be able to use our existing resonance charging system alternately with the new supply. The reason for the required flexibility was, that in the first stage we only wanted to install three 10kJ/s-modules, which is not sufficient to operate the modulator at full average output power. For operation at full output power we need to switch back to our existing resonance charging system. It was planned to upgrade the new set up to full power capabilities if the test with three units would be successful.

Three constant current power supply modules were installed in a 19 inch rack. A second 19 inch rack would be required for the extension of the power supply to twelve modules. This could be done in a later stage if one wants to operate the modulator at full average power with the capacitor charging power supply.
The space required by two 19 inch racks for the power supply is about a factor of ten less than the space required for the existing charging system.

All power supply controls were connected to the master power supply module, which controls the two power supply slave modules. We constructed an interface which easily allows to switch the controls and interlocks alternately to the existing DC power supply or to the new constant current power supply.

Each module came with a separate 20m long HV output cable. Although the distance between the PFN cabinet and the modules is approximately 10m, we decided to bring all individual cables from each module into the cabinet instead of connecting the cables in the 19 inch rack and bringing just one cable to the PFN. This has of course the disadvantage of having more connections between the two units and adding more losses, but it avoids the problem of connecting three 50kV cables in the 19 inch rack under air. It also makes it simpler to install or remove quickly one module.

One of the things which could harm the constant current power supply is negative voltage at its output. In this case current would be drawn through the output rectifier diodes of the modules. This current could exceed the current capabilities of the diodes and could damage them. One typical condition for a reverse voltage on the PFN capacitors is the case of klystron arcing or breakdown in the PFN. A measure to protect the power supply by adding two series resistors between the charging power supply and the PFN and a free wheeling diode between the two series resistors to ground is proposed by the manufacturer. One could argue that the EOLC diode could fulfil the task of protecting the power supply. It will of course limit the inverse voltage between the two PFN capacitor terminals, but it is the voltage between ground

and the capacitor terminal connected to the power supply which is crucial. This could reach a negative voltage level which could damage the charging power supply.
Therefore one might think of adding an additional diode to ground at the connection between the charging power supply and the PFN. This would protect the charging power supply in case of arcing. On the other hand one also has to keep in mind the normal operation conditions. Under normal operation conditions the voltage wave which propagates from the thyratron side of the PFN to the power supply side perceives an infinite termination at the power supply end. Therefore, in case of a perfect match between the PFN and the load, the voltage difference between the two capacitor terminals at the powers supply side drops from full voltage to zero when the wave reaches this end. But since the lower capacitor terminal is at negative voltage with respect to ground during the PFN pulse, the upper capacitor terminal drops to the same negative voltage after half of the PFN pulse. Adding the diode and the resistors at this point would lead to a current from the PFN to ground through the protecting diode and so would spoil the PFN pulse. We therefore moved the PFN to HV power supply connection and the protecting diode and resistors to the thyratron side of the PFN Figure 2 shows the modified circuit.

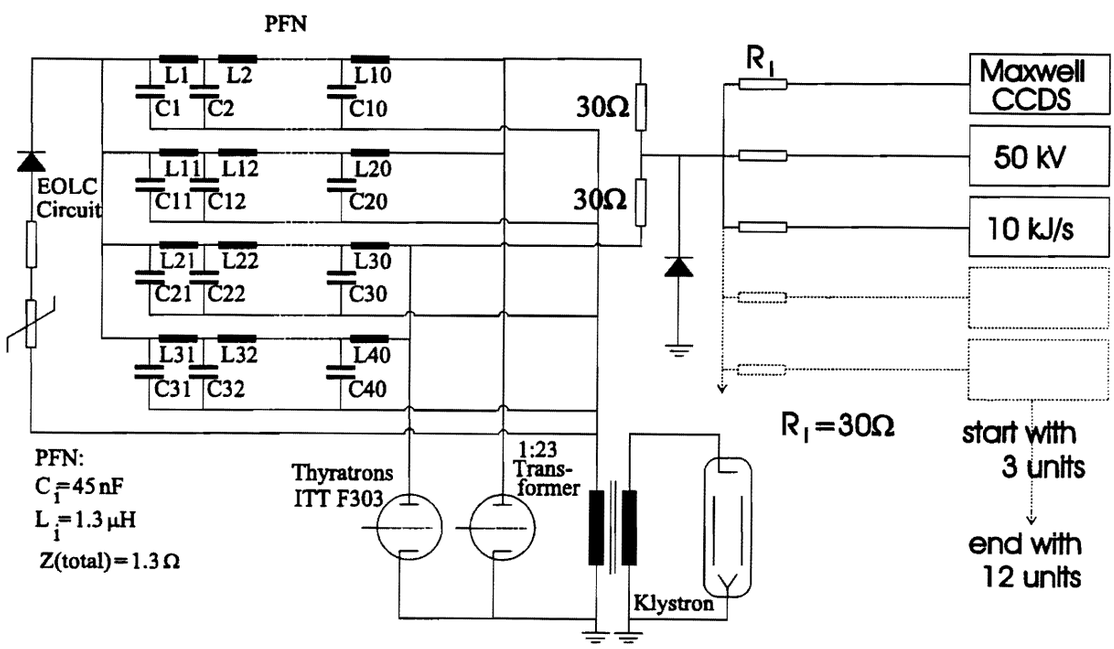

Figure 2. Schematic diagram of the modified circuit with constant current charging power supplies

The thyratrons are decoupled by two 30Ω resistors in series. There are also 30Ω resistors at the end of each cable coming from the powers supply. The protecting diode is made of 25 high voltage diodes capable of 4kV (MEDL DS412SE40). A varistor (Harris V142CA60) is connected in parallel with each diode to achieve equal voltage across each diode.
Simulations of the various operation conditions, both normal operation and fault conditions, were performed with PSpice. Their results show that even in the case of PFN breakdown or klystron arcing the current through the power supply rectifier diodes is only in the order of some amperes, which is not dangerous for the diodes, whereas the current through the free wheeling diode could reach several kA.

Adding resistors in the charging circuit adds losses to the modulator. The losses result from losses during the charging of the PFN with a constant current and from the losses due to the stored energy in the capacitance of the cables between the PFN and the power supply. We calculated the losses to 88.5W per cable termination resistor plus 873W for the thyratron decoupling resistors at an output voltage of 50kV. This adds up to 1935W in case of operation with twelve modules or to 484W in case of operation with three modules.

Measurements

Besides obtaining operation experience with this type of power supply three points were of major interest, the power supply efficiency, the pulse to pulse stability and the power supply reaction to the mains.

We performed most of the measurements with a reduced PFN capacitance of 0.9μF with five capacitors per PFN line. The maximum power supply voltage of 50kV is more than required to operate the klystron at an output power of 150MW. At 50kV a voltage of more than 600kV could be reached at the klystron cathode. At this voltage level up to 213MW of RF power could be extracted from the klystron. Since the klystron was constructed for a voltage of 535kV and a power of 150MW we reduced the flat top pulse duration from 3μs to 1μs by decreasing the number of capacitors per line to five.

The efficiency was measured at various power supply voltages at a repetition rate of 12.5Hz. Two modules were in operation. The input power was calculated from measurements of voltage and current of the input phases of the modules.
At an output voltage of 50kV the power supply efficiency reaches 93%. Figure 3 shows the efficiency versus the charging voltage.

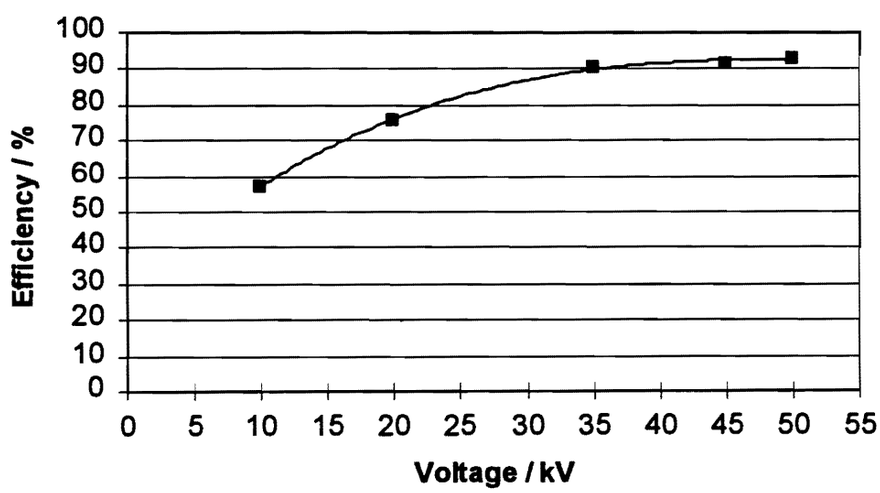

Figure 3. Measured efficiency of the constant current charging power supply

One also has to add the losses in the protecting charging resistors. Assuming an operation at full average power one has to add 1.9kW resistor losses to the power supply losses of 8kW (calculated from an efficiency of 93% and a total power output of 114.4kW (losses in charging resistors plus power to charge the PFN)). This gives a total efficiency of the charging system of 91.5%.

The pulse to pulse stability was measured by superposing 1500 klystron voltage pulses on a scope. This allows to estimate the pulse to pulse stability to be better than 0.5%.

Since the reaction of the modulator power supplies to the mains is an important issue for a linear collider, we measured the voltage and the current of the three input phases of the master power supply. From these data we calculated the time behaviour of the input power of the three phases. Figure 4 shows the power extracted from the three phases of the mains by the master power supply and the charging voltage during one charging cycle. It is basically a picture one would expect from a three phase double way rectifier which has do provide a linear increasing output power. The mains are loaded by a series of increasing pulses which are 3.3ms apart. This process is then repeated with the modulators repetition rate.

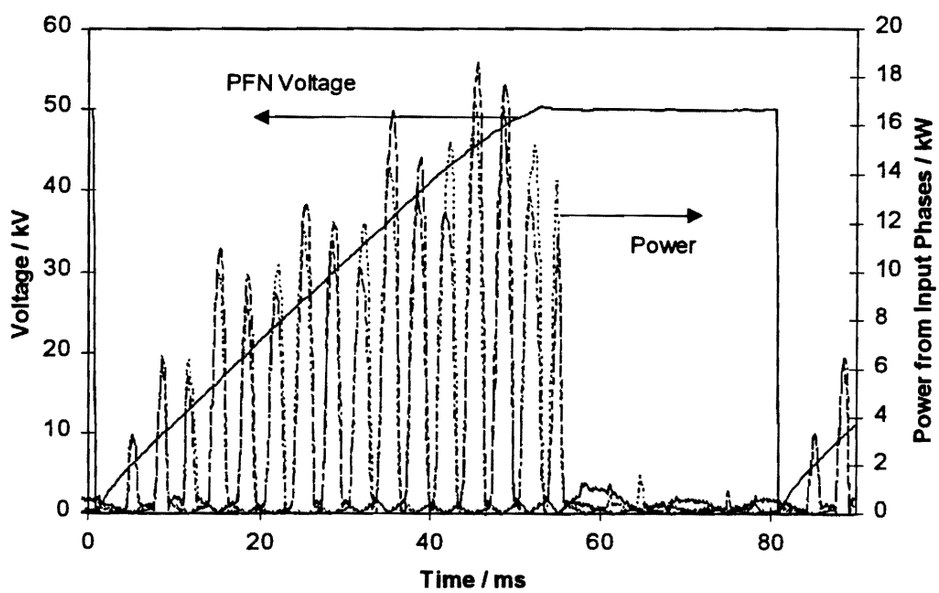

Figure 4. PFN voltage and power from the input phases as function of time

Conclusion

A constant current capacitor charging power supply was installed and operated at one of the HV pulse modulators at the S-Band test facility.

The space required by the power supply is much less than for a conventional charging system consisting of DC HV power supply and charging choke and diode. A reduction by a factor of about ten could be achieved.

The power supply efficiency is 93%. One must take into account the losses in the protecting charging resistors. Despite part of the losses in the protecting charging resistors is due to the stored energy in the long cables between the PFN and the charging power supply the efficiency is still above 91%. This number could be even increased by using shorter cables.

The pulse to pulse stability is better than 0.5%, which can otherwise only be achieved by using a DeQing system or by using a DC power supply with good regulation.

The reaction of the supply to the mains is a point which needs further investigation. The power extracted from the mains is not constant. The mains are loaded with the repetition rate of the modulator. Measures must be taken to limit this effect.

Another important issue touches the power distribution in a linear collider tunnel. The inverter circuits of constant current charging power supplies use IGBTs or other semiconductor switches. Therefore their input voltage is in the 1000V range. Power distribution at this voltage level leads to losses due to the high current required, to large diameter cables or to additional transformers in the tunnel.

All this shows that the constant current charging power is a promising candidate for the installation in a linear collider tunnel. It has a high efficiency, good regulation and it is compact, but its reaction to the mains needs more attention.

Acknowledgements

The authors would like to acknowledge the help of P. Nommensen on building the power supply controller interface and M. Lomperski and R. Babayan by writing the power supply control program.

References

[1] S. Choroba, M. Bieler, J. Hameister, Y. Chi, A 375MW Modulator for a 150MW Klystron at the S-Band Linear Collider Test Facility at DESY, Proceedings of the XVIII International Linear Accelerator Conference, Linac96, Geneva, Switzerland, 26 -30 August, 1996, P. 785