ISSN 0029-3865

CBPF - CENTRO BRASILEIRO DE PESQUISAS FÍSICAS
Rio de Janeiro

FERMILAB
JAN 3 2003

CBPF-NF-042-02

Notas de Física

CBPF-NF-042/02
November 2002

Some Properties of a Solution of the Ernst Equation

J. Gariel, G. Marcilhacy and N.O. Santos

MCT - Ministério da Ciência e Tecnologia
BRASIL

Some properties of a solution of the Ernst equation

J Gariel[1], G Marcilhacy[1] and N O Santos[1,2,3]

[1] Université Pierre et Marie Curie – CNRS/UMR 8540, LRM/ERGA, Tour 22-12, 4éme étage, Boîte 142, 4 place Jussieu, 75252 Paris Cedex 05, France
[2] Laboratório Nacional de Computação Científica, 25651-070 Petrópolis, RJ, Brazil
[3] Centro Brasileiro de Pesquisas Físicas 22290-180 Rio de Janeiro, RJ, Brazil

E-mail: gariel@ccr.jussieu.fr, santos@ccr.jussieu.fr and nos@cbpf.br

Received 20 November 2001
Published 25 March 2002
Online at stacks.iop.org/CQG/19/2157

Abstract
Using Ehlers and unitary transformations, from Bonanos solution of the Ernst equation, we build a new vacuum stationary axisymmetric solution of Einstein equations depending on three parameters. The parameters are associated with the total mass of the source and its angular momentum. The third parameter produces a topological deformation of the ergosphere making it a two-sheet surface, and for some of its values forbids the Penrose process.

PACS numbers: 0470B, 0425D

1. Introduction

We present a vacuum stationary axisymmetric solution of the Ernst equation which can be obtained by using the Euclidon method proposed by Gutsunaev *et al* [1]. Then we show that this solution reduces to the one found by Bonanos [2], and later rediscovered by others, in particular by Das [3]. This solution is symmetric in the prolate spheroidal coordinates and depends on one parameter, called q_1. The construction of the corresponding gravitational potentials, with the help of the Boyer–Lindquist transformation, shows that this solution represents the extreme Kerr black hole [2, 3]. An Ehlers transformation followed by an unitary transformation on the latter solution, while keeping its asymptotical flatness, permits introduction of two more parameters. So, the obtained new solution, in Boyer–Linquist coordinates, depends on three parameters, which are connected, as in the Kerr case, to the total mass of the source and its angular momentum. However, we did not succeed in relating directly this solution to the Kerr solution, but we know that such a link does exist by reason of the uniqueness theorem for the solution with a good asymptotical behaviour and without naked singularity [4]. Only the extreme black hole of Kerr appears as a limit, when $q_1 \to 0$, of the proposed solution, and this latter does not present a naked singularity. Varying the q_1 parameter allows us to show its role in the ergosphere shape. The ergosphere, which initially has a torus shape, continuously loses its form and finally separates into a two-sheet toroidal surface, progressively exposing

the event horizon more and more. Then the Penrose process [5] is no longer able to take place in a domain of the azimuthal angle, for some range of the q_1 parameter values.

The paper is organized as follows. In section 2 we present a brief resolution of the Ernst equation. In section 3 we present the Bonanos solution [2] and transform it into a three parameter stationary axisymmetric solution of the Ernst equation. Then in section 4 we analyse the causal structure of the newly found three parameter solution. We end the paper with a brief conclusion.

2. Brief recall on the resolution of the Ernst equation

The line element of a general axisymmetric stationary spacetime is the so-called Papapetrou metric, which in the cylindrical coordinates, ρ, z and ϕ, reads

$$ds^2 = f(dt - \omega d\phi)^2 - f^{-1}[e^{2\gamma}(d\rho^2 + dz^2) + \rho^2 d\phi^2] \tag{1}$$

where the gravitational potentials, f, ω and γ are functions of ρ and z only. The canonical coordinates of Weyl, ρ and z, can be given in terms of prolate spheroidal coordinates, λ and μ, by the relations

$$\rho = k(\lambda^2 - 1)^{1/2}(1 - \mu^2)^{1/2} \qquad z = k\lambda\mu \tag{2}$$

where $k > 0$ is a constant, λ a radial coordinate and $-1 \leqslant \mu \leqslant 1$ is an angular coordinate. The metric (1) with relations (2) can be rewritten as

$$ds^2 = f(dt - \omega d\phi)^2 - \frac{k^2}{f}\left[e^{2\gamma}(\lambda^2 - \mu^2)\left(\frac{d\lambda^2}{\lambda^2 - 1} + \frac{d\mu^2}{1 - \mu^2}\right) + (\lambda^2 - 1)(1 - \mu^2)\, d\phi^2\right] \tag{3}$$

where the potentials are now functions of λ and μ. The Ernst equation is [6]

$$(\xi\bar{\xi} - 1)\nabla^2\xi = 2\bar{\xi}\nabla\xi \cdot \nabla\xi \tag{4}$$

where ∇ and ∇^2 are the gradient and the three-dimensional Laplacian operators respectively, $\bar{\xi}$ is the conjugated complex potential of ξ, and in general its solution can be expressed as

$$\xi(\lambda, \mu) = P(\lambda, \mu) + iQ(\lambda, \mu) \tag{5}$$

where P and Q are real functions of λ and μ. Among the classical solutions of the Ernst equation, we can cite the well-known Kerr solution [6],

$$\xi_K = p\lambda + iq\mu \tag{6}$$

where p and q are real constants satisfying

$$p^2 + q^2 = 1 \tag{7}$$

and the Tomimatsu–Sato solution,

$$\xi_{TS} = \frac{\alpha(\lambda, \mu; p, q, \delta)}{\beta(\lambda, \mu; p, q, \delta)} \tag{8}$$

where α and β are two complex polynomials depending on the Kerr parameters p and q and a parameter δ assuming integer values describing the deformation of the source [7]. To determine the potentials f, ω and γ of the metric (3), the method consists of using the following relation between f, the twist potential Φ and ξ,

$$f + i\Phi = \frac{\xi - 1}{\xi + 1} \tag{9}$$

which implies with (5)

$$f = \frac{P^2 + Q^2 - 1}{R^2} \qquad \Phi = \frac{2Q}{R^2} \tag{10}$$

or, equivalently,

$$f = 1 - \frac{\partial \ln R^2}{\partial P} \qquad \Phi = \frac{\partial \ln R^2}{\partial Q} \tag{11}$$

where

$$R^2 = (P+1)^2 + Q^2. \tag{12}$$

In (9), Φ is the twist potential defined up to a constant and related to the dragging ω by the following differential equations:

$$\frac{\partial \omega}{\partial \lambda} = \frac{k(1-\mu^2)}{f^2}\frac{\partial \Phi}{\partial \mu} \qquad \frac{\partial \omega}{\partial \mu} = -\frac{k(\lambda^2-1)}{f^2}\frac{\partial \Phi}{\partial \lambda}. \tag{13}$$

The potential ω is obtained by integration of (13), and γ is determined by quadratures. Any solution of the Ernst equation is a solution of the Einstein equations.

3. A new three parameter solution

Using the method proposed by Gutsunaev *et al* [1], the so-called Euclidon method, to obtain vacuum axisymmetric stationary solutions of Ernst equation (4), we can obtain

$$\xi = \frac{\lambda\mu - 1}{\lambda - \mu} + \mathrm{i}q_1(\lambda - \mu) \tag{14}$$

where q_1 is an arbitrary real parameter. We shall present in another paper details of the method used to obtain (14).

By applying the method recalled in section 2, we obtain the potentials corresponding to solution (14),

$$f = \frac{(\lambda^2-1)(1-\mu^2) + q_1^2(\lambda-\mu)^4}{(\lambda-1)^2(1+\mu)^2 + q_1^2(\lambda-\mu)^4} \tag{15}$$

$$\Phi = \frac{2q_1(\lambda-\mu)^3}{(\lambda-1)^2(1+\mu)^2 + q_1^2(\lambda-\mu)^4} \tag{16}$$

$$\omega = \frac{2k}{q_1}\left\{\lambda + \frac{(1-\mu^2)\left[(\lambda^2-1)(1+\mu) - q_1^2(\lambda-\mu)^3\right]}{q_1^2(\lambda-\mu)^4 - (\lambda^2-1)(1-\mu^2)}\right\}. \tag{17}$$

We can observe that this solution is not asymptotically flat, because $g_{t\phi}$ does not vanish as $\lambda \to \infty$ and has the same behaviour as the Demianski–Newman $g_{t\phi}$ [11, 12].

Now making on (14) the simple transformations, $\mu \to -\mu$, then $\xi \to \mathrm{i}\xi$, and then $\xi \to \xi^*$, we obtain

$$\xi_B = -q_1(\lambda+\mu) + \mathrm{i}\frac{\lambda\mu+1}{\lambda+\mu}. \tag{18}$$

Calculating the corresponding potentials in (18) by using the method of section 2, we obtain

$$f_B = \frac{(\lambda\mu+1)^2 + (\lambda+\mu)^2\left[q_1^2(\lambda+\mu)^2 - 1\right]}{(\lambda\mu+1)^2 + (\lambda+\mu)^2[q_1(\lambda+\mu)-1]^2} \tag{19}$$

$$\Phi_B = \frac{2(\lambda\mu+1)(\lambda+\mu)}{(\lambda\mu+1)^2 + (\lambda+\mu)^2[q_1(\lambda+\mu)-1]^2} \tag{20}$$

$$\omega_B = -\frac{2k(\lambda^2-1)(1-\mu^2)[q_1(\lambda+\mu)-1]}{q_1\left[q_1^2(\lambda+\mu)^4-(\lambda^2-1)(1-\mu^2)\right]}. \tag{21}$$

Introducing the coordinates r and θ through the Boyer–Lindquist transformation [9]

$$\lambda = \frac{r-M}{k} \qquad \mu = \cos\theta \tag{22}$$

we obtain asymptotically, $r \to \infty$, for (19) and (21)

$$f_B \approx 1 + 2\frac{k}{q_1}\frac{1}{r} + O\left(\frac{1}{r^2}\right) \tag{23}$$

$$\omega_B \approx 2\left(\frac{k}{q_1}\right)^2 (1-\mu^2)\frac{1}{r} + O\left(\frac{1}{r^2}\right). \tag{24}$$

From this asymptotical behaviour, (23) and (24), it is easy to interpret the solution given by ξ_B in (18) as describing the extreme Kerr black hole. The solution ξ_B has been obtained in 1973 by Bonanos and rediscovered by Das [3], and developed by Bonanos and Kyriakopoulos [2] from the Herlt method [14].

We can further transform the Bonanos solution (18), as follows, by including two more parameters. The new solution thus obtained has an interesting causal structure which is studied in the next section.

By means of the following particular Ehlers transformation [8] on (18),

$$\xi_1 = \frac{c_1\xi_B + d_1}{\bar{d}_1\xi_B + \bar{c}_1} \tag{25}$$

we can introduce a second real parameter α_1, where

$$c_1 = 1 + i\alpha_1 \qquad d_1 = i\alpha_1 \tag{26}$$

satisfying

$$\begin{pmatrix} c_1 & d_1 \\ \bar{d}_1 & \bar{c}_1 \end{pmatrix} \in SU(1,1) \qquad |c_1|^2 - |d_1|^2 = 1. \tag{27}$$

It can be proved that solution (25) does not have suitable asymptotical flatness. Then, a second step consists of performing a unitary transformation on ξ_1,

$$\xi_2 = -e^{i\theta_0}\xi_1 = (m+in)\xi_1 \qquad m^2+n^2 = 1 \tag{28}$$

with θ_0 an arbitrary real constant, and m and n real constants. Then (28) with (5), (18) and (25) becomes

$$\begin{aligned}\xi_2 = [-\alpha_1 Q_B - 1 + i\alpha_1(P_B+1)]^{-1}\{&P_B(m-\alpha_1 n) - Q_B(\alpha_1 m + n) - \alpha_1 n + i[P_B(\alpha_1 m + n) \\ &+ Q_B(m-\alpha_1 n) + \alpha_1 m]\}\end{aligned} \tag{29}$$

where P_B and Q_B are the real and imaginary parts, respectively, of (18). Considering

$$\alpha_1 = -\frac{n}{2(1+m)} \tag{30}$$

and applying the method recalled in section 2, we find the potentials corresponding to the solution (29) of the Ernst equation

$$f_2 = \left\{\frac{(1+\lambda\mu)^2 + (\lambda+\mu)^2\left[q_1^2(\lambda+\mu)^2-1\right]}{(1+\lambda\mu)^2 + (\lambda+\mu)^2\left[q_1(\lambda+\mu)+1\right]^2}\right\}\cos^{-2}\frac{\theta_0}{2} \tag{31}$$

$$\Phi_2 = -2\left\{\frac{(1+\lambda\mu)(\lambda+\mu)}{(1+\lambda\mu)^2+(\lambda+\mu)^2[q_1(\lambda+\mu)+1]^2}\right\}\cos^{-2}\frac{\theta_0}{2} \tag{32}$$

$$\omega_2 = \frac{2k}{q_1}\left\{\frac{(1-\mu^2)(\lambda^2-1)[1+q_1(\lambda+\mu)]}{(1+\lambda\mu)^2+(\lambda+\mu)^2\left[q_1^2(\lambda+\mu)^2-1\right]}\right\}\cos^2\frac{\theta_0}{2}. \tag{33}$$

We find for γ_2 in (1) from (29),

$$\gamma_2 = \frac{1}{2}\ln\left[q_1^2 - \frac{(\lambda^2-1)(1-\mu^2)}{(\lambda+\mu)^4}\right] - \frac{1}{2}\ln q_1^2. \tag{34}$$

Furthermore, the factor $\cos^{-2}(\theta_0/2)$ in (31) can be absorbed by a rescaling process of the metric into a conformal metric, such as $ds_2^2 = \cos^{-2}(\theta_0/2)ds^2$. Now introducing the coordinates r and θ, through the Boyer–Lindquist transformation (22), into (31) and (33), we obtain asymptotically, $r \to \infty$,

$$f_2 \approx 1 - 2\frac{k}{q_1}\frac{1}{r} + O\left(\frac{1}{r^2}\right) \tag{35}$$

$$\omega_2 \approx 2\left(\frac{k}{q_1}\right)^2\cos^2\frac{\theta_0}{2}\frac{(1-\mu^2)}{r} + O\left(\frac{1}{r^2}\right). \tag{36}$$

We see from (35) and (36) that the solution now has the good asymptotic behaviour allowing us to interpret the parameters q_1, θ_0 and k as

$$\frac{k}{q_1} = M \qquad \cos^2\frac{\theta_0}{2} = \frac{J}{M^2} = \frac{a}{M} \tag{37}$$

where M and J are, respectively, the mass and angular momentum of the source, and $a = J/M$ the angular momentum per unit mass. In the Kerr solution (6) there are two parameters linked by condition (7). The asymptotical behaviour of this solution imposes [10]

$$p = \frac{k}{M} \qquad q = \frac{a}{M} \tag{38}$$

and condition (7) fixes k,

$$k^2 = M^2 - a^2. \tag{39}$$

In our solution, the asymptotical relations (35) and (36) impose (37), but q_1, θ_0 and k are arbitrary, as can be seen from (14), (28) and (2) (with (22)). Of course, it is always possible to compare our parameters to those of Kerr by putting

$$\frac{a}{M} = q = \cos^2\frac{\theta_0}{2} \qquad \frac{k}{M} = p = q_1 \tag{40}$$

and assuming $0 \leqslant q_1 \leqslant 1$. So, we would have also from (7),

$$q_1^2 + \cos^4\frac{\theta_0}{2} = 1. \tag{41}$$

However, it is not necessary for us to choose (40) and (41). In general, our solution presents three independent free parameters, q_1, θ_0 and k, whereas the Kerr solution presents only one independent parameter, either p or q. Furthermore, imposing (40) and (41) does not reduce our solution, (31)–(34), to the Kerr solution. The differences between both solutions are further studied in the next section. Besides, we note that the solution (31)–(34) does not belong to the usual Tomimatsu–Sato solutions [7].

4. Horizons, ergospheres and singularities

Expression (31) can be written as

$$f_2 = \frac{N}{D}\cos^{-2}\frac{\theta_0}{2} \tag{42}$$

with

$$N = (1+\lambda\mu)^2 + (\lambda+\mu)^2\left[q_1^2(\lambda+\mu)^2 - 1\right] \tag{43}$$

$$D = (1+\lambda\mu)^2 + (\lambda+\mu)^2[q_1(\lambda+\mu)+1]^2. \tag{44}$$

4.1. Horizons

The horizons correspond to the solution of $f_2 = 0$ for $\mu = \pm 1$ which is, from (43), and (22), $r_h = M \pm k$. These horizons split into the Cauchy horizon, with radius $r_{ch} = M - k$, and the event horizon, with radius $r_{eh} = M + k$. These results are satisfactory since, for any stationary axisymmetric metric, the horizons depend only on the spacetime symmetries.

4.2. Ergospheres

The equation of the ergosphere surfaces, from (42), is $N = 0$, and two cases have to be distinguished from (43).

4.2.1. $\lambda + \mu = 0$. In this case $N = 0$ if, in addition,

$$1 + \lambda\mu = 0 \tag{45}$$

which, with (22), imposes two solutions, describing two 'points'

$$\mu = -1 \qquad r = M + k = r_{ch} \tag{46}$$

$$\mu = 1 \qquad r = M - k = r_{ch}. \tag{47}$$

These 'points', (46) and (47), are the intersections of the z-axis with the event horizon, $r = r_{eh} = M + k$, and the Cauchy horizon, $r = r_{ch} = M - k$, respectively, belonging to the ergospheres. It has to be noted that (46) and (47) produce, from (44), $D = 0$ as well, hence there is an indetermination for the ratio N/D. This indetermination can be raised by studying the limits $(r - M)/k \to \pm 1$ which produce

$$\lim_{r\to r_{ch}} f_2(\mu = -1) = \lim_{r\to r_{ch}} f_2(\mu = 1) = 0. \tag{48}$$

The limits (48) are finite and zero, hence these points belong to the ergospheres.

4.2.2. $\lambda + \mu \neq 0$. In this case, $(\lambda+\mu)^2$ can be factorized in (43), and the equation for $N = 0$ becomes

$$\left(\frac{1+\lambda\mu}{\lambda+\mu}\right)^2 + q_1^2(\lambda+\mu)^2 = 1 \tag{49}$$

which is the equation for the ergosphere surfaces. It is a fourth degree surface, and for the representation of this surface, it is useful to express it through a parametric representation with the help of a parameter τ, such that

$$\left(\frac{1+\lambda\mu}{\lambda+\mu}\right)^2 = \cos^2\tau \qquad q_1^2(\lambda+\mu)^2 = \sin^2\tau. \tag{50}$$

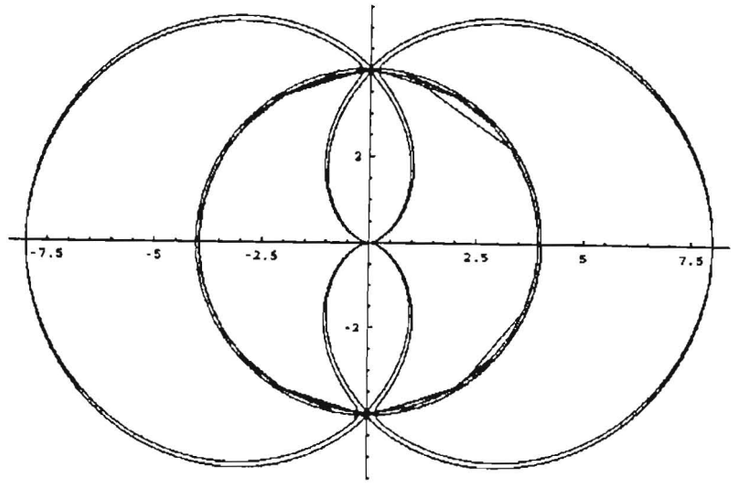

Figure 1. $q_1 = 0.01$, $r_{eh} = 4.04$, $r_{ch} = 3.96$.

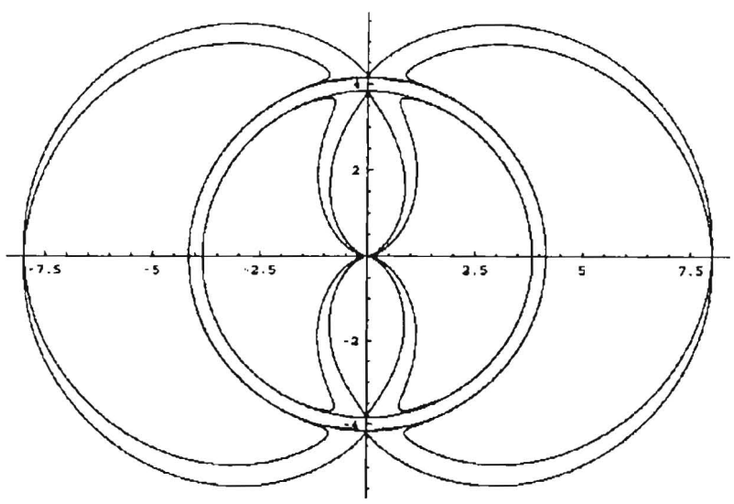

Figure 2. $q_1 = 0.04$, $r_{eh} = 4.16$, $r_{ch} = 3.84$.

We can see from (50) that it is a bounded closed surface for any value of the q_1 parameter. We have plotted some curves, which are intersections of this surface by the meridian plane $\phi = 0$, for different values of the parameter $1 \geqslant q_1 > 0$, as shown in figures 1–10. These curves present the following interesting features:

- When $q_1 \to 0$ the aspect of the ergospheres and horizons tends towards the aspect of the Kerr extreme black hole (e.g. see figure 4 of [12]), as shown in figure 1.
- When q_1 increases its value the aspect of the ergospheres remarkably differs from this of a Kerr black hole, as shown in figures 2–5. Especially, we can note, the surface of the exterior ergosphere becomes double, presenting some thickness being a two-sheet torus. It is the same for the interior ergosphere.
- For a defined value of q_1, near $q_1 \approx 0.5$, the exterior ergosphere opens itself on the axis $\mu = 0$ ($\theta = \pi/2$), as shown in figures 6–8. Then the event horizon becomes naked in a certain angular aperture, whereas the Kerr event horizon is always dressed by the exterior surface of the ergosphere. Thus, on this spatial portion, the Penrose process [5] is no

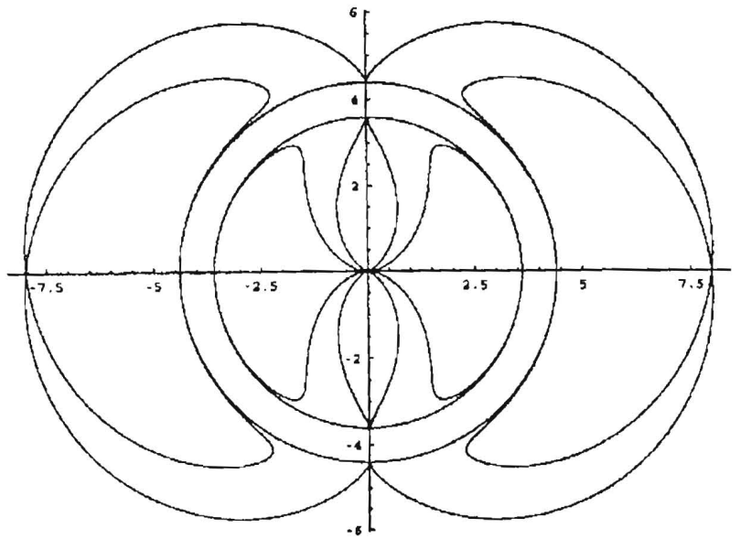

Figure 3. $q_1 = 0.1$, $r_{eh} = 4.4$, $r_{ch} = 3.6$.

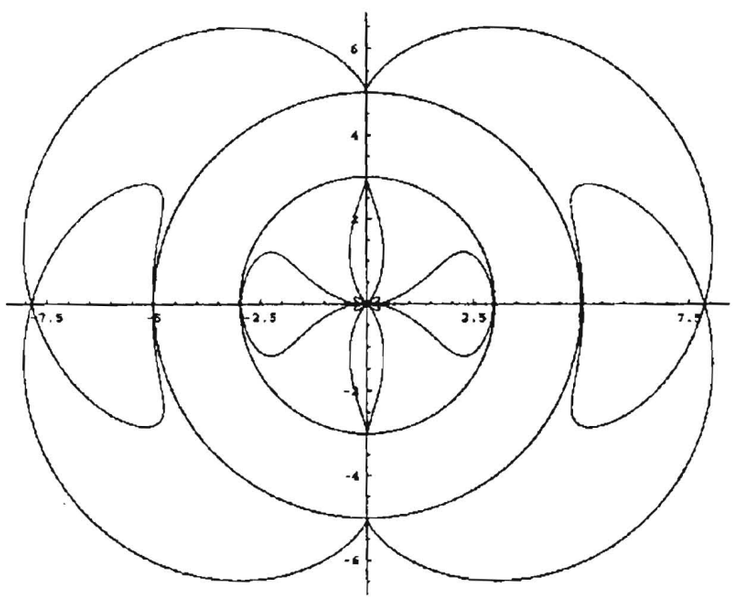

Figure 4. $q_1 = 0.25$, $r_{eh} = 5$, $r_{ch} = 3$.

longer able to take place. This special topology of the ergosphere also indicates, here, a difference with the Kerr metric.

- The evolution of the interior part of the ergosphere, for increasing values of q_1, looks intricate, with, particularly, the advent from the centre of a new curve, as shown in figures 3–4, with a four-leaved clover shape, which grows until it passes beyond the Cauchy horizon, as shown in figures 8–9, which of course vanishes when $q_1 = 1$ ($M = k$), as shown in figure 10. This complicated behaviour also presents an important difference with the Kerr metric, because in this last case, the Cauchy horizon always covers the interior ergosphere.

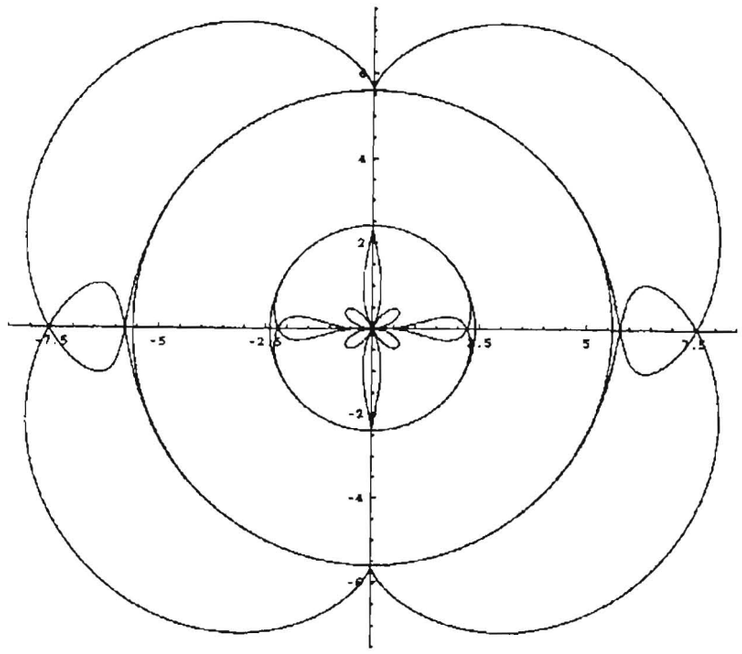

Figure 5. $q_1 = 0.4$, $r_{eh} = 5.6$, $r_{ch} = 2.4$.

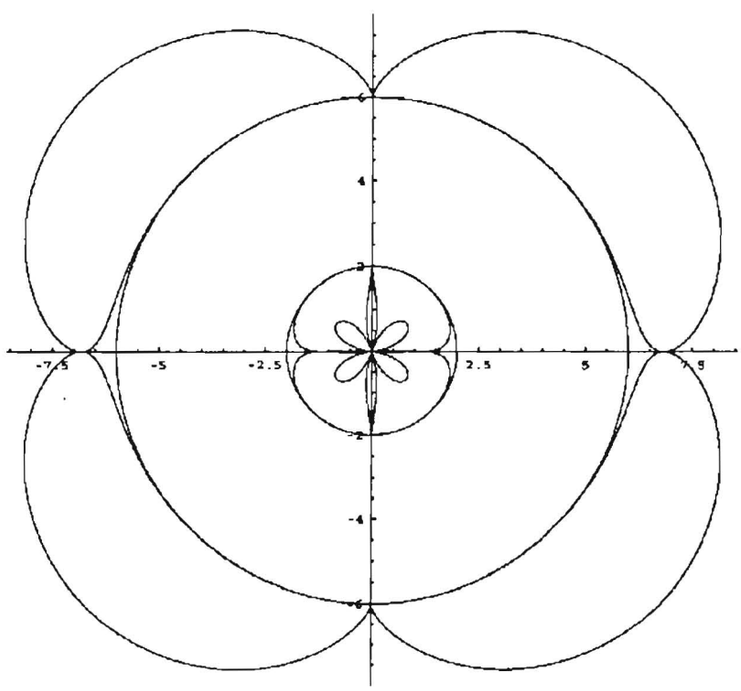

Figure 6. $q_1 = 0.5$, $r_{eh} = 6$, $r_{ch} = 2$.

Figures 1–10 show the parametric plots of the curves describing the intersections of the interior and exterior ergospheres, defined by (50), with the meridian plane $\phi = 0$ for different values of the parameter q_1 in the range $\left[10^{-2}, 1\right]$. The vertical axis is z. The ergospheres are the axisymmetric surfaces which can be generated by rotation of the curves around the z-axis.

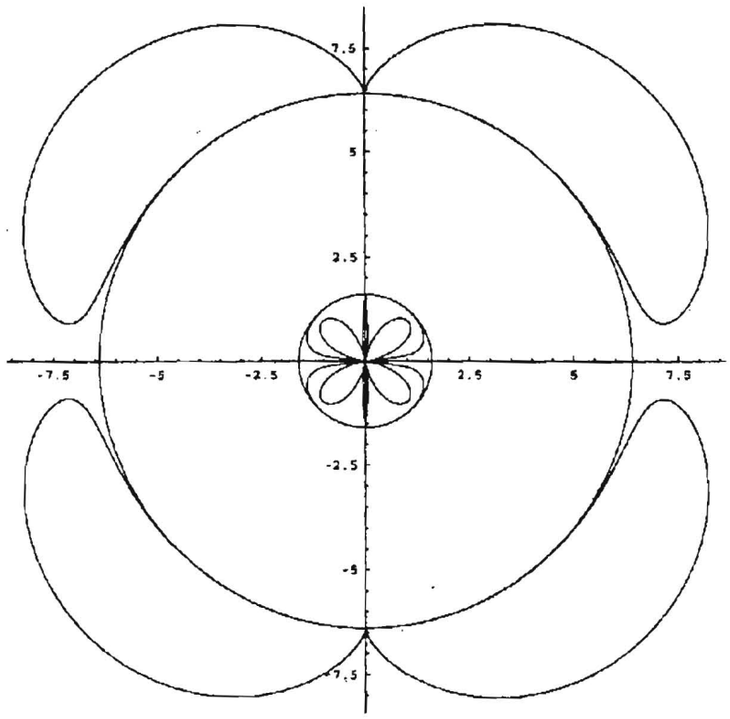

Figure 7. $q_1 = 0.6$, $r_{ch} = 6.4$, $r_{ch} = 1.6$.

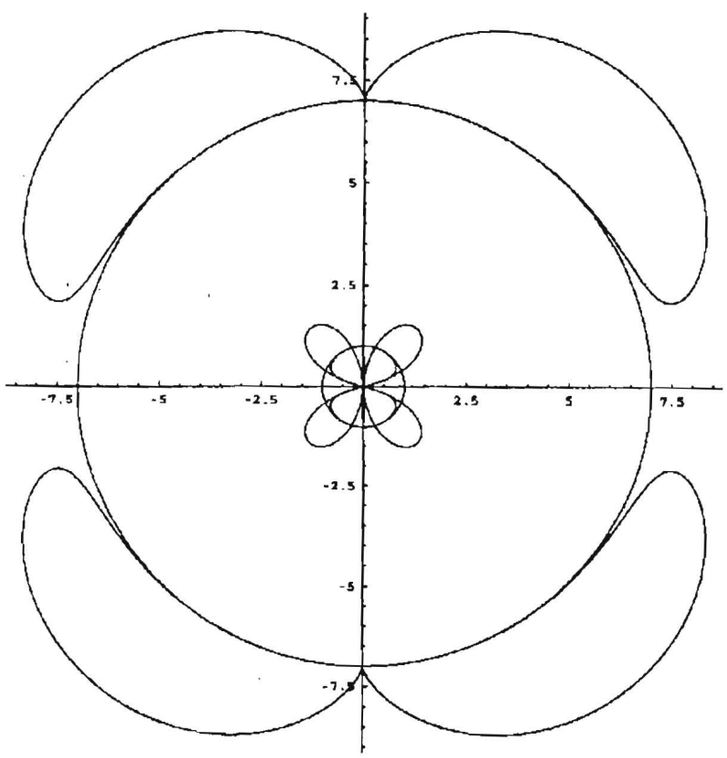

Figure 8. $q_1 = 0.75$, $r_{ch} = 7$, $r_{ch} = 1$.

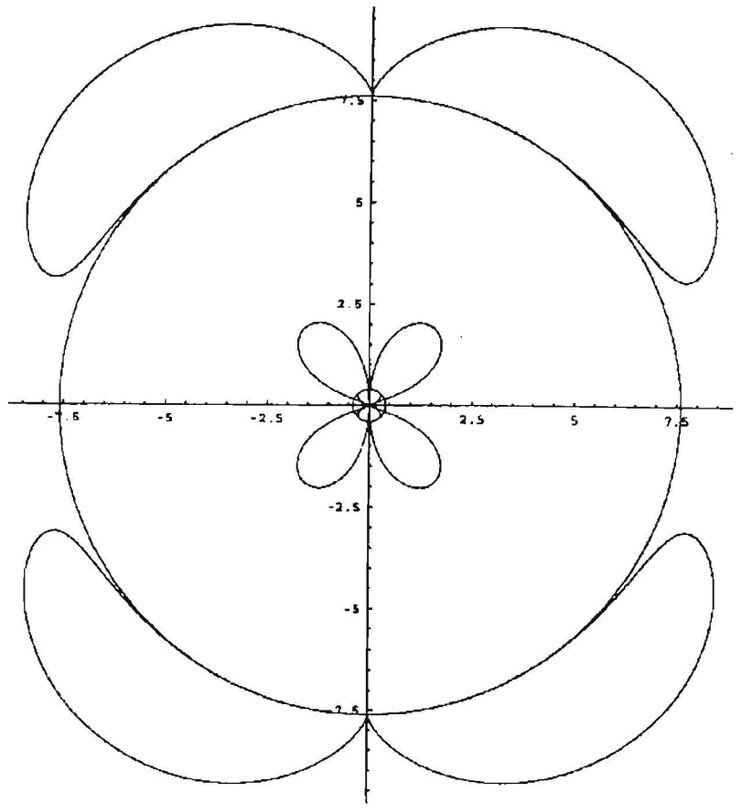

Figure 9. $q_1 = 0.9$, $r_{eh} = 7.6$, $r_{ch} = 0.4$.

The event horizon and Cauchy horizon are also represented (circles of radius $r_{eh} = M + k$, $r_{ch} = M - k$, respectively). The mass M has been fixed to the value $M = 4$. k is given by (37).

4.3. Singularities

The singularities correspond, when they exist, to curves or surfaces defined by $D = 0$ from (44). We see that D is a sum of squares and it can vanish only in two cases.

4.3.1. $1 + \lambda\mu = 0$ and $\lambda + \mu = 0$. This system of equations is the same as studied in section 4.2.1, and corresponds to the two points (46) and (47) of the horizons where $N = 0$. Since, after raising the indetermination of the ratio N/D, the limit (48) is finite and zero, these two points are not singular.

4.3.2. $1 + \lambda\mu = 0$ *and* $q_1(\lambda + \mu) = -1$. Consequently,

$$q_1\mu^2 + \mu - q_1 = 0. \tag{51}$$

The polynomial (51) always has two roots

$$\mu_\pm = \frac{-1 \pm \sqrt{\Delta}}{2q_1} \qquad \Delta = 1 + 4q_1^2 \tag{52}$$

that gives the two solutions

$$\mu_+ = \frac{-1 + \sqrt{\Delta}}{2q_1} \tag{53}$$

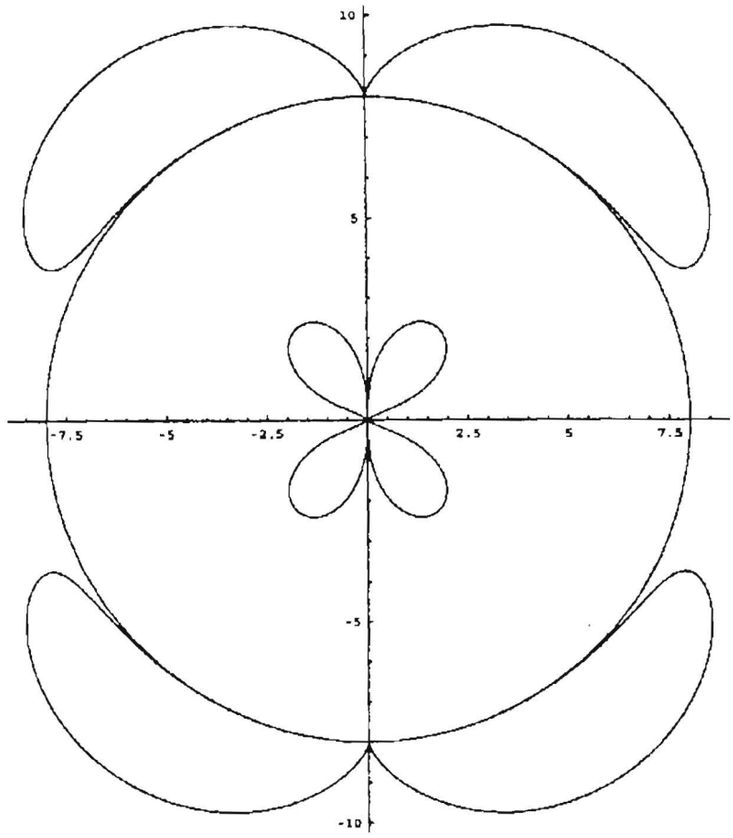

Figure 10. $q_1 = 1$, $r_{ch} = 8$, $r_{ch} = 0$.

and

$$\mu_- = -\frac{1+\sqrt{\Delta}}{2q_1}. \tag{54}$$

The first solution, (53), produces $0 \leqslant \mu_+ \leqslant 1$, while the second, (54), produces $|\mu_-| > 1$, hence it has to be rejected. From (53) with (22), we have

$$r_+ = M\left(1 + \frac{2q_1^2}{1-\sqrt{\Delta}}\right) \tag{55}$$

which gives $r_+ < r_{ch} = M - k$, hence the two ring singularities (55), which are the solutions for $\mu_+ = \cos(\pm\theta_+)$, are inside the Cauchy horizon and so, *a fortiori*, inside the event horizon. There are no naked singularities.

5. Conclusion

It is possible to recover with the Euclidon method [1] the Bonanos solution (18) of the Ernst equation, originally obtained with the Herlt method [14]. It depends on one parameter, q_1, and can be interpreted as an extreme black hole. To introduce a second parameter in this solution, we performed an Ehlers transformation, producing a non-asymptotically flat spacetime instead. Only after performing an unitary transformation, the new solution obtained, (29), with condition (30), achieves the appropriate physical asymptotical flatness. A second parameter, θ_0, appears in this process, to which we have to add the free parameter k of the prolate spheroidal

coordinates transformation. In Boyer–Lindquist coordinates, the asymptotical behaviour of the metric time component, f_2, and of the dragging, ω_2, permits the parameters introduced to be interpreted in terms of the mass and angular momentum of the source (37).

We did not succeed in obtaining the Kerr limit of the solution, however we know that it does exist because of the uniqueness theorem, since this new solution has asymptotical flatness and does not present naked singularities.

One of the parameters introduced, q_1, shapes the ergospheres showing notable topological differences to the Kerr spacetime. When this parameter $q_1 \to 0$, the solution tends to the extreme Kerr black hole, which is different from the Bonanos extreme Kerr black hole solution since, for this case, $q_1 \neq 0$ is arbitrary. For some range of the parameter values, the exterior ergosphere opens itself leaving the event horizon naked, which forbids a Penrose-like process in this aperture. We conjecture that the obtained new solution (31)–(34) represents a distorted stationary black hole, which would extend the results obtained in the static case [13], but this needs further investigation.

Acknowledgments

The authors wish to thank R Colistete Jr for his valuable help discussing and formatting this paper and the anonymous referees for calling our attention to [2, 3] and for their valuable remarks. NOS gratefully acknowledges financial assistance from CNPq, Brazil.

References

[1] Gutsunaev Ts I, Chernyaev V A and Elsgolts S L 1999 *Grav. Cosmol.* **4** 335
[2] Bonanos S and Kyriakopoulos E 1987 *Phys. Rev.* D **36** 1257
[3] Das K C 1983 *Phys. Rev.* D **27** 322
[4] Carter B 1971 *Phys. Rev. Lett.* **26** 331
Robinson D C 1975 *Phys. Rev. Lett.* **34** 905
[5] Penrose R and Floyd R M 1971 *Nature Phys. Sci.* **229** 177
[6] Ernst F J 1968 *Phys. Rev.* **167** 1175
[7] Tomimatsu A and Sato H 1972 *Phys. Rev. Lett.* **29** 1344
Tomimatsu A and Sato H 1973 *Prog. Theor. Phys.* **50** 95
[8] Chandrasekhar S 1983 *The Mathematical Theory of Black Holes* (Oxford: Oxford University Press) p 285
[9] Carmeli M 1982 *Classical Fields: General Relativity and Gauge Theory* (New York: Wiley) p 387
[10] Kramer D, Stephani H, Herlt E and MacCallum M 1980 *Exact Solutions of Einstein's Field Equations* (Cambridge: Cambridge University Press) p 206
[11] Demianski M and Newman E T 1966 *Bull. Acad. Pol. Sci., Ser. Sci. Math. Astron. Phys.* **14** 653
[12] Gariel J, Marcilhacy G, Santos N O and Colistete R 2000 Parametrization of singularities of the Demiamski–Newman spacetimes *Preprint* gr-qc/0012004
[13] Geroch R and Hartle J B 1982 *J. Math. Phys.* **23** 680
[14] Herlt E 1978 *Gen. Rel. Grav.* **9** 711

NOTAS DE FÍSICA é uma pré-publicação de trabalho original em Física.
Pedidos de cópias desta publicação devem ser enviados aos autores ou ao:

Centro Brasileiro de Pesquisas Físicas
Área de Publicações
Rua Dr. Xavier Sigaud, 150 - 4º andar
22290-180 - Rio de Janeiro, RJ
Brasil
E-mail: socorro@cbpf.br/valeria@cbpf.br

NOTAS DE FÍSICA is a preprint of original unpublished works in Physics.
Requests for copies of these reports should be addressed to:

Centro Brasileiro de Pesquisas Físicas
Área de Publicações
Rua Dr. Xavier Sigaud, 150 - 4º andar
22290-180 - Rio de Janeiro, RJ
Brazil
E-mail: socorro@cbpf.br/valeria@cbpf.br