Fermilab Library
0 1160 0019246 2

UdeM-LPN-TH-097

RARE DECAYS AS A PROBE FOR NEW PHYSICS

G. BÉLANGER
Laboratoire de Physique Nucléaire, Université de Montréal, C.P. 6128, Succ. A, Montréal, Québec, Canada H3C 3J7

ABSTRACT

The standard model predictions for rare K and B decays are reviewed. Possible new physics effects in either CP conserving or CP violating processes are summarized.

1. Introduction

Precise low-energy experiments have always been an alternative to high-energy colliders in looking for new physics. In the former one seeks for loop effects of heavy particles while in the latter these can be produced directly, provided sufficient energy is available. Here I will discuss how rare K and B decays have and/or could be used to probe new physics. Before doing this, the predictions of the standard model (SM) with which they should be compared must be studied very carefully. In the SM, the uncertainties in the predictions of rare decay rates can be fairly large due to our poor knowledge of the Cabibbo-Kobayashi-Maskawa (CKM) matrix, in particular of the element V_{td}. Furthermore there are many uncertainties due to QCD effects, long distance contributions and other hadronic effects that have to be controlled. Thus it is not a simple task to unequivocally establish non-standard signals. The easiest way to do so is to concentrate on decays where these uncertainties are not so important, typically but not exclusively those involving neutrinos in the final state. Among the CP conserving processes the interesting ones are $K^+ \to \pi^+\nu\bar{\nu}, K^+ \to \pi^+\mu^+\mu^-, K_L \to \mu\bar{\mu}$, $b \to s\gamma, d\gamma$ and $b \to s\nu\bar{\nu}, d\nu\bar{\nu}$. The CP violating ones include $K_L \to \pi^0\nu\bar{\nu}$ and the two-spin correlation in $K^+ \to \pi^+\mu^+\mu^-$. The standard model predictions for these processes will be reviewed and new physics effects on these rare decays wil be summarized.

Only a few of the numerous possible scenarios for new physics will be analysed. These will be divided in two categories according to whether or not a new source of CP violation is present. The two-Higgs doublet model will serve as an example of a model where CP violation is standard. This model is particularly interesting since it occurs naturally in supersymmetric theories. In the second category, which includes models where additional phases leading to CP violation can be introduced, I will mainly discuss a leptoquark model.

In the first part of this talk I will discuss various rare decays while trying to estimate the precision needed to improve on our present knowledge of the CKM matrix parameters in the standard model. Since rare decays of K and B mesons occur at the one-loop level, they are sensitive to the heaviest quark, the top, and to the corresponding elements of the quark mixing matrix. Although it could eventually be

possible to extract some information on m_t from rare decays,[1] I will rather assume that m_t is known. This assumption is reasonable since we already know from LEP that $m_t = 150 \pm 25 \pm 16 GeV$,[2] and such a top quark would certainly be measured before rare decays are precise enough to really test the standard model. In the numerical estimates, $m_t = 140 GeV$ will be assumed.

2. CKM matrix

In the Maiani-Wolfenstein parametrization, the CKM matrix which describes the mixing in the quark sector is given approximately by[3]

$$V \simeq \begin{pmatrix} 1-\frac{1}{2}\lambda^2 & \lambda & A\lambda^3(\rho - i\eta) \\ -\lambda & 1-\frac{1}{2}\lambda^2 & A\lambda^2 \\ A\lambda^3(1-\rho-i\eta) & -A\lambda^2 & 1 \end{pmatrix}, \tag{1}$$

where η characterizes the CP violation. The standard model cannot predict the value of any element in this matrix, thus they must be extracted from experiments. Although direct and indirect measurements of several elements of this matrix have been made, the uncertainties on certain parameters (ρ and η) are still very large. The best known parameter is λ which is determined in Kaon and Hyperon decays,[4]

$$\lambda = |V_{us}| = 0.2196 \pm 0.0023 \tag{2}$$

For our purpose it will be sufficient to fix $\lambda = 0.22$ since the error bars on this parameter are much smaller than on all other parameters.

The matrix element V_{cb} is obtained from B meson decay to charm final states,[2]

$$|V_{cb}| = A\lambda^2 = .044 \pm .007 \tag{3}$$

This result, coupled with the measurement (2), will give the main constraint on A. The direct measurement of V_{ub} can be obtained from B meson decay to non-charm final state, we have

$$\frac{|V_{ub}|}{|V_{cb}|} = \lambda\sqrt{\rho^2+\eta^2} = 0.11 \pm 0.04 \tag{4}$$

where the error bars are mainly theoretical and dependent on the quark model. The ones quoted here include the predictions from most models.[5]

To get further information on the CKM matrix, one has to rely on indirect measurements, specifically, ϵ, the CP violation parameter in Kaons and x_d the $B_d^0 - \bar{B}_d^0$ mixing parameter. Additional information could be obtained from the value of ϵ' but due to inconclusive experimental results and some theoretical ambiguities, this will not be used here.[6] We have

$$|\epsilon| = \frac{G_F^2 M_W^2}{12\pi^2}\frac{M_K}{\sqrt{2}\Delta M_K} B_K f_K^2 2A^2\lambda^6\eta[-\eta_{cc}B(x_c) + \eta_{ct}B(x_c,x_t) + \eta_{tt}A^2\lambda^4(1-\rho)B(x_t)] \tag{5}$$

with the measured value

$$|\epsilon| = (2.272 \pm .022) \times 10^{-3} \tag{6}$$

The mixing parameter which depend only on $|V_{td}|^2$ is written as

$$x_d = \frac{G_F^2}{6\pi^2} M_B B_B f_B^2 \tau_B M_W^2 A^2\lambda^2[(1-\rho)^2+\eta^2]B(x_t) \tag{7}$$

and the measured value is

$$x_d = 0.71 \pm 0.11. \tag{8}$$

$B(x_t)$ is a top quark mass dependent function.[7] The values of the other parameters are taken as in Ref. 7 with the exception of $\sqrt{B_B} f_B$.

An important source of uncertainties in the $B_d^0 - \bar{B}_d^0$ mixing is f_B. The theoretical predictions on this parameter vary wildly and this has some important consequences for the rare decays.[8] I will use two common values when making numerical estimates, the so-called low value $\sqrt{B_B} f_B = 130 \pm 40 MeV$[9] or a higher value as obtained in lattice QCD calculations[10] or as indicated by some quark model calculations,[11] $\sqrt{B_B} f_B = 220 \pm 30 MeV$. Most models predict a value within one or the other of these ranges. Of course f_B could be kept as a free parameter in the analysis but in the hope that the theoretical estimates will eventually get sorted out, I will rather present results for these two values separately. Note that even if the theorists fail to agree on the value of f_B, this parameter will eventually be extracted from leptonic B decays, e.g $B \to l\nu$ or $B_s \to l^+l^-$.[12]

The easiest way to find the allowed region for the three parameters of the CKM matrix and to represent the effect of each individual measurement is to draw the constraints separately and look at the intersection region, this is done in numerous publications.[1,7,14] The correct statisticaltreatment however requires a χ^2 fit to the four pieces of data given in Eqs. 2-4 and Eq. 6. The results are plotted in the $\rho - \eta$ plane (see Fig. 1) for a given top quark mass.[13] In this plot A remains a free parameter. Clearly at 90% C.L. (corresponding to $\Delta\chi^2 = 4.61$) a very large region of the plane is allowed. From this curve one can see that the high value for f_B prefers the solution with ρ positive while for the low value both negative and positive values are allowed. On the other hand the upper and lower limit on η do not change very much whichever value of f_B is chosen. The allowed ranges are respectively

$$\begin{aligned} .05 < \eta < .74 \quad for \quad f_B = 130 \pm 40 MeV \\ .11 < \eta < .78 \quad for \quad f_B = 220 \pm 30 MeV \end{aligned} \tag{9}$$

We also obtain that the allowed range for A at 1σ is given by

$$A = 0.91 \pm 0.1 \tag{10}$$

In summary, with the current level of precision the consistency of the standard model description of the quark mixing cannot really be checked. To do this, it is essential to improve the direct measurements of V_{cb} and V_{ub} and to refine the theoretical calculations for B_K and f_B as well as the models used to extract the value for V_{ub}.

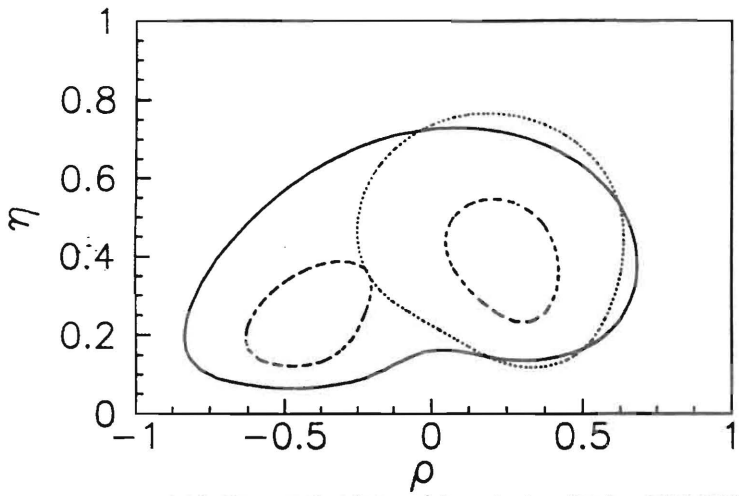

Fig. 1. Contour curves in the $\rho - \eta$ plane from a χ^2 fit to the data, for $f_B = 130 \pm 40 MeV$ at 1σ (dash) and 90% C.L. (full) and $f_B = 220 \pm 30 MeV$ at 1σ (dash-dot) and 90% C.L. (dotted). In all cases, $m_t = 140 GeV$.

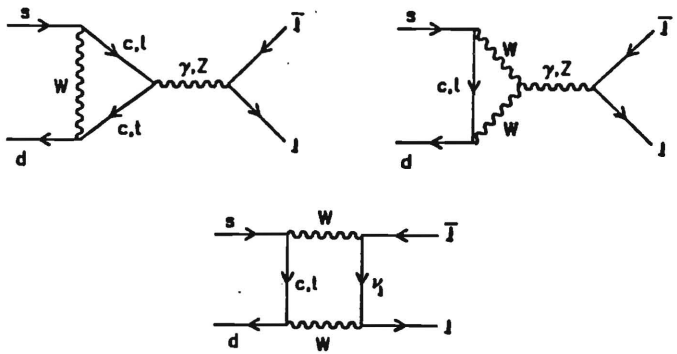

Fig. 2. One-loop diagrams for the short-distance contribution to rare K decays in the standard model; a) the W-box and b) the Z-penguin.

Although I will not discuss the effect of varying m_t it is clear from Eq. 5 and Eq. 7 that the predictions depend very much on the top quark mass. A measurement of m_t would therefore much reduced the uncertainties on the CKM parameters.

Besides these obvious improvements of direct measurements, a whole set of possibilities for testing the CKM matrix is available with rare K and B decays. This will be the topic of the remainder of this talk. I will show that indeed this can be done and that furthermore precise measurements of rare decays could give signs of new physics.

3. Rare decays in the standard model

The decays of K and B mesons can provide indirect measurements of $ReV_{td} \approx (1-\rho)$ and $ImV_{td} \approx \eta$ since they occur at the one-loop level and are dominated by the heaviest fermion, the top quark. The top dominance is unquestionable for B decays but remains true even for Kaons since the high top mass overcomes the CKM suppression factor proportional to $V_{ts}V_{td}$ which appears in all Kaon processes. Nevertheless in these decays, the contribution from the c quark cannot be neglected. B decays offer many advantages over Kaons since the long distance effects are less important, and the relative heaviness of the b guarantees the accuracy of the spectator model. However, B decays also have some drawbacks the most important being that QCD effects can be very large, e.g. in $b \to s\gamma$, and can be a serious hindrance to the study of electroweak physics. One way to circumvent this problem is to make use of the two possible transitions $b \to s$ and $b \to d$. The former being insensitive to the CKM parameters (since $V_{ts}/V_{cb} \approx 1$) could be used to check the QCD parameters while the latter could test the CKM matrix. However this is possible only with a very large number of B mesons since in $b \to d$ decays one has to face the problem of small branching ratios because of the V_{td}/V_{ts} suppression factor. On the practical side Kaons have a definite advantage since there are plans for extremely precise measurements of all rare kaon decays[15,16] and despite the small branching ratios precision measurements of V_{td} will become possible. On the other hand, predictions for b decays are still orders of magnitude below the present accuracy with the exception of the radiative decay $b \to s\gamma$ which is inevitably approaching the standard model level.[17]

The dependence on the CKM parameters for various decays are listed in Table 1. The b decays are normalised to the dominant charged current semileptonic mode.

TABLE 1. Dependence on CKM parameters for rare decays

Process	CKM dependence
$K^+ \to \pi^+\nu\bar{\nu}$	$A^2[\eta^2 + (1-\rho^2)]$
$K_L \to \pi^0\nu\bar{\nu}$, $K_L \to \pi^0 e^+e^-$, $P_2(K^+ \to \pi^+\mu^+\mu^-)$	$(A^2\eta)^2$
$K_L \to \mu\bar{\mu}$, $P_L(K^+ \to \pi^+\mu^+\mu^-)$	$A^2(1-\rho)$
$b \to s\gamma, s\nu\bar{\nu}, se^+e^-$	independent
$b \to d\gamma, d\nu\bar{\nu}, de^+e^-$	$(1-\rho)^2 + \eta^2$

3.1. $K^+ \to \pi^+\nu\bar{\nu}$

The penguin and box diagrams shown in Fig. 2 for this process are typical of the ones contributing to rare decays. With a final state involving neutrinos, there are

no photon exchange which makes $K^+ \to \pi^+\nu\bar{\nu}$ a rather clean decay exempt of long-distance effects. As for all Kaon decays, there is some weak dependence on the c quark mass. The short-distance contribution to this decay is given for example in Ref.7.

The present experimental limit[2] is $Br(K^+ \to \pi^+\nu\bar{\nu}) < 5 \times 10^{-9}$ and there are plans for current experiments to increase their precision to 10^{-10} within a few years.[16] When comparing the contour plots of Fig. 3 with the allowed region in the $\rho - \eta$ plane shown in Fig. 1, it can be seen that this level of precision will not be sufficient to put further constraints on the CKM matrix unless a signal higher than the standard model expectations is measured. This conclusion is reached even with the optimistic assumption of a known top quark mass and with A fixed at its central value. From this figure it is also obvious that the higher value of f_B favors smaller branching ratios. A measurement of $Br(K^+ \to \pi^+\nu\bar{\nu}) > 2\times10^{-10}$ for example would be almost inconsistent with this f_B for any value of the parameter A. On the other hand it is also clear from Fig.3 that a measurement at the level 10^{-11} would reduce the allowed region in the $\rho - \eta$ plane even though the predictions get significantly spead out when the 1σ range of A (V_{cb}) is allowed. A precision of 10^{-12} or better, as can be achieved by KAON would give a very good measure of ρ and η especially if a much improved value of V is available. Alternatively this decay could provide an indirect measurement of V_{cb} and f_B. However one must remember that the ability to do this will be eventually limited by the uncertainty on the c quark mass.[18]

3.2. $K_L \to \pi^0\nu\bar{\nu}$

This decay which also involves neutral particles in the final state has no long distance effects from photons. Furthermore it was shown that the indirect CP violation is small so this decay could give a new signal of direct CP violation.[19] At the moment only poor limits on this mode exist ($< 2.2 \times 10^{-4}$) but the possibilities to reach 10^{-11} have been studied.[20] The direct CP violating contribution is given for example in Ref. . For $m_t = 140GeV$, we have

$$Br(K_L \to \pi^0\nu\bar{\nu}) = 1.81 \times 10^{-10}(A^2\eta)^2 . \qquad (1\,)$$

The values of $A^2\eta$ and η (for A fixed at its central value given in Eq. 9) corresponding to hypothetical measurements of this branching ratio are listed in Table 2.

TABLE 2. Limits on the CP violating parameter η from $K_L \to \pi^0\nu\bar{\nu}$

$10^{11} \times Br(K_L \to \pi^0\nu\bar{\nu})$	$A^2\eta$	η ($A = 0.91$)
1	.24	.28
2	.33	.40
3	.41	.49
5	.53	.63
7	.62	.75
9	.71	.85
11	.78	.94

For a fixed value of m_t and A a level of precision of 10^{-11} will improve the current limit on η although this improvement becomes marginal when the error bars on A are

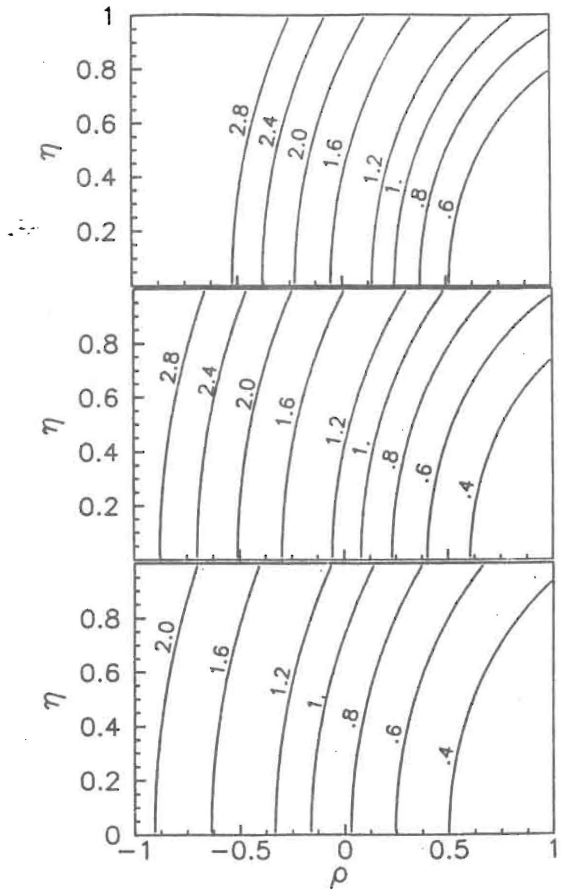

Fig. 3. Contour curves in the $\rho - \eta$ plane for $10^{10}Br(K^+ \to \pi^+\nu\bar{\nu})$ with $m_t = 140GeV$ and a) $A = 0.81$ b) $A = 0.91$ and c) $A = 1.01$.

included. Nevertheless when coupled with other rare decays, in particular $K^+ \to \pi^+\nu\bar{\nu}$ which give almost orthogonal information on ρ and η, the neutral mode will provide a useful indirect measurement of the CKM matrix element η and more importantly will finally give another signal of CP violation.

3.3. $K^+ \to \pi^+\mu^+\mu^-$

The two spin correlation in $K^+ \to \pi^+\mu^+\mu^-$ which is directly proportionnal to η would also signal CP violation.[21] As discussed in the parallel session,[22] this correlation involves the measurement of the spins of both leptons and is given by

$$P_2(K^+ \to \pi^+\mu^+\mu^-) = R_2\ \Phi(E_\mu, \bar{E}_\mu) \tag{12}$$

where $\Phi(E_\mu, \bar{E}_\mu)$ is a phase space factor and

$$R_2 = 3.3 \times 10^{-3} A^2\eta \tag{13}$$

for $m_t = 140 GeV$. A potential 10^{-2} precision on this correlation could be achieved at KAON.[23] For typical values of the phase space factor this translates into a 10^{-3} precision on R_2. This level of accuracy will be barely sufficient to reduce the presently allowed parameter space which in fact would be covered entirely when error bars on V_{cb} are included. Nevertheless this measurement is very important. First it will give a consistency check of the standard prediction since independently of the CKM parameters one should get

$$\frac{R_2}{\sqrt{Br(K_L \to \pi^0\nu\bar{\nu})}} = 2.5 \times 10^{-2}. \tag{14}$$

This value is however dependent on the top quark mass. Second it could give sign of new physics especially if a value higher than expected is measured.

TABLE 3. Limits on the CP violating parameter η from $R_2(K^+ \to \pi^+\mu^+\mu^-)$

$10^3 \times R_2(K^+ \to \pi^+\mu^+\mu^-)$	$A^2\eta$	η ($A = 0.91$)
1	.30	.36
2	.60	.72
3	.90	1.09

3.4. $K_L \to \mu\bar{\mu}$, $P_L(K^+ \to \pi^+\mu^+\mu^-)$

Orthogonal information on the CKM matrix can be obtained from CP conserving processes, which all depend on $1-\rho$ (or $a-\rho$ when QCD corrections are included). The first one is $K_L \to \mu\bar{\mu}$ which receives an important two photon contribution. For this decay it is not so clear how to extract the short distance contribution.[7,24] The present limit[2] is $Br(K_L \to \mu\bar{\mu})$=$7.9 \pm 0.6 \pm 0.3 \times 10^{-9}$. One needs to know the short-distance contribution (SD) at a 10^{-9} level or better to put new constraints on CKM parameters as can be seen from Table 4. The numerical values quoted here include both the charm and top quark contributions.[7]

TABLE 4. Limits on ρ from $Br(K_L \to \mu\bar{\mu})_{SD}$

$10^9 \times Br(K_L \to \mu\bar{\mu})$	ρ ($A = 0.81$)	ρ ($A = 0.91$)	ρ ($A = 1.01$)
.2	.62	.68	.75
.4	.32	.45	.55
.6	.06	.27	.40
1.0	-.27	-.02	.17
1.5	-.64	-.32	-.05
2.0	-.95	-.53	-.25
2.5	-	-.75	-.42
3.0	-	-.95	-.58

From the point of view of probing the CKM matrix an equivalent measurement with much less uncertainties would be the longitudinal polarization in $K^+ \to \pi^+\mu^+\mu^-$. The polarization which can be written as

$$P_L(K^+ \to \pi^+\mu^+\mu^-) = R_L\ \Psi(E_\mu, \bar{E}_\mu) \tag{15}$$

where $\Psi(E_\mu, \bar{E}_\mu)$ is a phase space factor. The standard model contribution to R_L[25] exhibits the same CKM and top quark dependence as the short-distance contribution to $K_L \to \mu\bar{\mu}$. One predicts

$$\frac{R_L}{\sqrt{Br(K_L \to \mu\bar{\mu})_{SD}}} = 60 \pm 6 \tag{16}$$

If one succeeds in obtaining a 10^{-3} measurement of R_L, comparable accuracy would be achieved with much less uncertainties. The dependence on ρ is given in Table 5.

TABLE 5. Limits on ρ from $P_L(K^+ \to \pi^+\mu^+\mu^-)$

$10^3 R_L$	$A^2(1-\rho)$	ρ ($A = 0.91$)
1	.28	.66
2	.56	.32
3	.85	-.03
4	1.12	-.36

3.5. $b \to s\gamma, d\gamma$

The main contribution to this radiative decay comes from the magnetic photon penguin diagrams. It was shown that the QCD corrections are very important here.[26,27] The decay $b \to s\gamma$ being practically independent of the CKM elements could be used to test these QCD corrections. Indeed we have that to a good approximation

$$\frac{\Gamma(b \to s\gamma)}{\Gamma(b \to c l\bar{\nu})} \propto |\frac{V_{cs}}{V_{cb}}|^2 \approx 1 \tag{17}$$

The ratio $Br(b \to d\gamma)/Br(b \to s\gamma)$ could then give some information on the CKM matrix since the QCD corrections should be more reliable than on each mode individually.

The ratio of radiative decays, including QCD corrections from Ref.28, is plotted in Fig. 4 in the ρ-η plane.

Note that the dependence on the V_{cb} element (or on A) drops out when taking the ratio of the radiative decays since at leading order

$$\frac{Br(b \to d\gamma)}{Br(b \to s\gamma)} \propto \frac{|V_{td}|^2}{|V_{ts}|} = (1-\rho)^2 + \eta^2 \tag{18}$$

A few percent accuracy on this measurement is needed to put further constraints on the CKM parameters and for this precision a B factory is needed. The present measurement for $b \to s\gamma$ is not far above the standard predictions and new results from CLEO II are expected soon.[17] Although nothing will be learned about the standard electroweak model with this new result, these measurements will make it possible to further constrain new physics since many models predict significant enhancements of this branching ratio as will be discussed in the next section.

3.6. $b \to s\nu\bar{\nu}, d\nu\bar{\nu}$

At the loop level these decays are similar to the $s \to d\nu\bar{\nu}$ process discussed before. Compare to radiative decays they have the advantage of receiving negligible QCD corrections. Again the properly normalised $b \to s$ mode is independent of the CKM matrix elements and the branching ratio is given in the spectator model by[29]

$$\frac{\Gamma(B \to \sum X_s \nu\bar{\nu})}{\Gamma(B \to X_c e\nu)} = 2.19 \times 10^{-5}\,[X(x_t)]^2 \tag{19}$$

where $X(x_t)$ a the top quark mass dependent function. For $m_t = 140GeV$, the branching ratio is 3.5×10^{-5}. The corresponding $b \to d$ transition is again suppressed by $|V_{td}|^2/|V_{ts}|^2 \approx .05$ and although just as good a measurementof ρ and η as the radiative decay might be hopelessly small to be measured.

To summarize this section, the standard model prediction for rare decays are at this point not very accurate. The decay $K^+ \to \pi^+\nu\bar{\nu}$ remains the best hope to measure the CKM element V_{td}. As usual when dealing with indirect measurements combining results from several rare decays is essential to really put a model to the test. The interesting level of precision from each decay taken individually is stated in Table 6. By combining different measurements and checking relations like (14) and (16) useful information can be gathered even before these levels are reached. Furthermore, as will be discussed in the next section, there is hope of seeing indication of new physics since the SM rates are often enhanced.

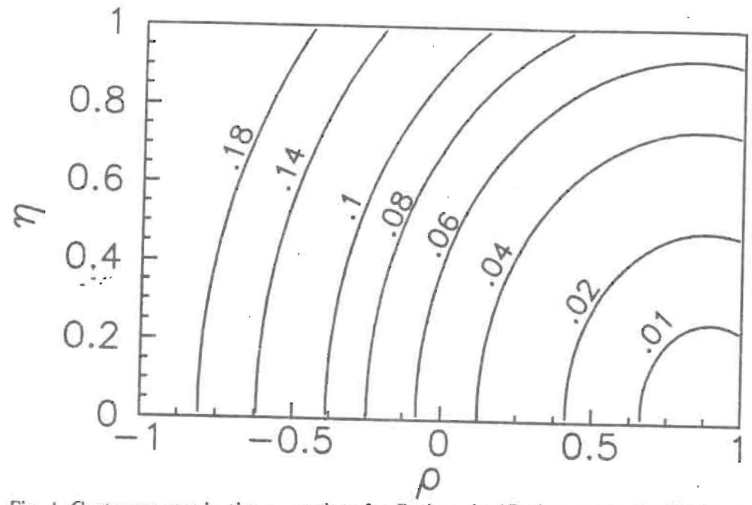

Fig. 4. Contour curves in the $\rho - \eta$ plane for $Br(b \to d\gamma)/Br(b \to s\gamma)$ in the SM for $m_t = 140GeV$.

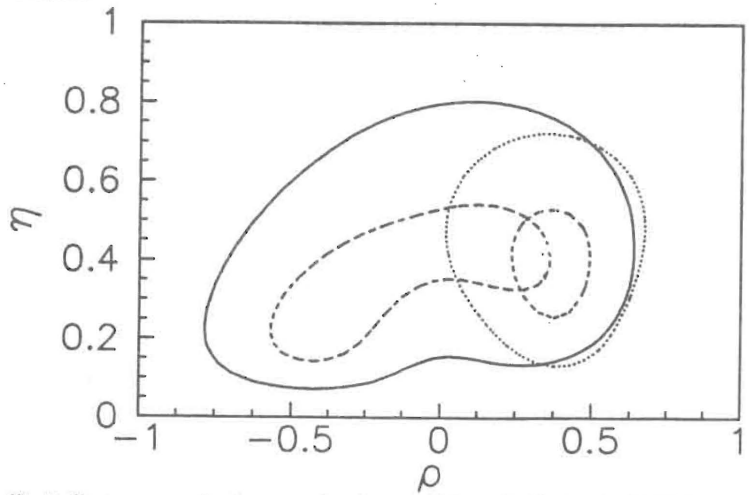

Fig. 5. Contour curves in the $\rho - \eta$ plane from a χ^2 fit to the data in the THDM for $\zeta = 1$, $m_H = 150GeV$ and $m_t = 140GeV$, same labels as Fig. 1.

TABLE 6. Precision required for various processes

Process	Precision
$K^+ \to \pi^+\nu\bar{\nu}$	few 10^{-11}
$K_L \to \pi^0\nu\bar{\nu}$	10^{-11}
$K_L \to \mu\bar{\mu}$	few 10^{-10}
$P_L(K^+ \to \pi^+\mu^+\mu^-)$	10^{-3}
$B \to X_d\gamma / B \to X_s\gamma$	few 10^{-2}
$B \to X_d\nu\bar{\nu} / B \to X_s\nu\bar{\nu}$	few 10^{-2}

4. Beyond the standard model

There has been a considerable amount of work done on the effect of new physics on rare decays.[30-42] This new physics could enter either at tree level, e.g. leptoquark exchanges, extra scalars and exotic fermions or at loop level, e.g. charged Higgs,[32,33] susy particles, new gauge bosons etc.. The main feature that stands out from publications on this topic is the possible enhancement in rare decays coming from new physics and the fact that these enhancements are model and process dependent. Fortunately the models affect various decays in a different way so distinguishing between the models is feasible provided some non-standard signals are observed.

The rare processes which are unmeasurably small in the standard model give the most undisputable signal of new physics (a typical example is $K_L \to \mu e$ which can put severe constraints on leptoquark models),[34] nevertheless I will concentrate on the decays discussed above which all receive a standard model contribution. The size of the possible enhancement from new physics will depend strongly on the masses of the new particles introduced so that ruling out models will not be possible. The goal is rather to show that rare decays could potentially give the first hints of physics beyond the standard model. For this the present constraints on masses and couplings of new particles will be used to estimate decay rates in various models.

Although a complete analysis of all possible source of new physics is a never-ending task, some general feature can be extracted when concentrating on a few popular models. The models considered will be divided in two categories according to whether or not they have a new source of CP violation. The two Higgs doublet model will be used as an example of those without and a leptoquark model will examplify the effect of introducing new phases while always keeping the CKM phase. Predictions from various models are summarized in Tables 7 and 8.

4.1. *Two Higgs doublet model (THDM)*

This model is interesting since it is the simplest extension to the standard model and it exists in most unified theories, more specifically in supersymmetric models. As in the supersymmetric models we will assume that one doublet couples to up type quarks while the other couples only to down type quarks. The new feature of this model is the appearance of many scalar fields. Only the effects arising from the charged Higgs will be considered. To completely describe the charged scalar two parameters need to be introduced, m_H, the mass of the charged Higgs, and $\xi = v_d/v_u$, the ratio of the vev's. The effect in loops will be to add new diagrams where all internal lines with W^+ are replaced by H^+. Since the charged Higgs contributes significantly to x_d via the box diagram, the constraints on ρ and η are modified for moderate values of m_H. Typically the lower bound on ρ increases while the one on η remains the same (see Fig.5).[13] The consequence is that CP conserving processes in Kaons which depend on $1-\rho$ are not enhanced despite the new contributions from the Higgs while the CP violating ones which depend on η are.[32,33] This occurs even if there are no new source of CP violation.

For B decays the situation is different. Since the $b \to s$ transitions are independent of the CKM parameters even the CP conserving processes are enhanced.[32,33] The formulas for the radiative b transition in the THDM are given by Hou and Willey.[35] The charged Higgs contribution being proportional to ξ, the enhancement factor shown in Fig. 6 depends strongly on the maximum value of ξ allowed for a given m_H. This maximum value can be obtained from the contour plot in the $\xi - m_H$ plane which gives the allowed region for these two parameters for fixed values of m_t.[13,36] Note that these contours were obtained using only the four measurements in Eqs. 2-4 and Eq. 6. For example when $m_t = 120GeV$, $m_H = 150GeV$ and $\xi = 4$, we have an enhancement factor of 10. Even for larger Higgs mass, e.g. $m_H = 300GeV$, large enhancements are possible (factor of 6 for $\xi = 5.5$) since the constraints on ξ are weaker in that case. The present measurement of this branching ratio already constrains somewhat the allowed parameter space. The present value[2] $Br(B \to K^*\gamma) < 2.4 \times 10^{-4}$ implies that $Br(b \to s\gamma) < 2.4 \times 10^{-3}$ for $\frac{\Gamma(B\to K^*\gamma)}{\Gamma(B\to X_s\gamma)} = 10\%$. The whole region where the enhancement factor is greater than 7 will then be ruled out. These constraints will become even more severe when the new data will be available.[33,37] Similar enhancements are expected for the process $b \to s\nu\bar{\nu}$, we have[38]

$$R = \frac{Br(b \to s\nu\bar{\nu})_{CH}}{Br(b \to s\nu\bar{\nu})_{SM}} \approx 1 + \xi^2 \frac{D(y_t)^{CH}}{D(y_t)^{SM}} \tag{20}$$

where $D(y_t)$ are top quark mass dependent functions. For $b \to d$ transitions, the CKM parameters come into play and like CP conserving Kaon proceses there is little sensitivity to the charged Higgs as can be seen from Table 7a.

4.2. *Other models*

A thorough discussion of b decays in supersymmetric models was done by Bertolini and co-authors,[39,46] they showed that there are possible enhancements in $b \to s\gamma$. Furthermore they showed that the SUSY parameter space could be constrained with this decay in a complementary way to what could be done in high-energy colliders. In such models, the neutralino and gluino contributions are small but the charged Higgs and chargino contributions could be almost comparable to the standard model. A constructive interference between those two contributions would then lead to a moderate enhancement over the standard model (see Fig. 14 of Ref.39). This is to be contrasted with $b \to s\nu\bar{\nu}$ where no such enhancement is expected. The exact value of the enhancement factor depends on the masses and other parameters of the supersymmetric model but even the present limit on this decay can constrain some masses of supersymmetric particles.[39]

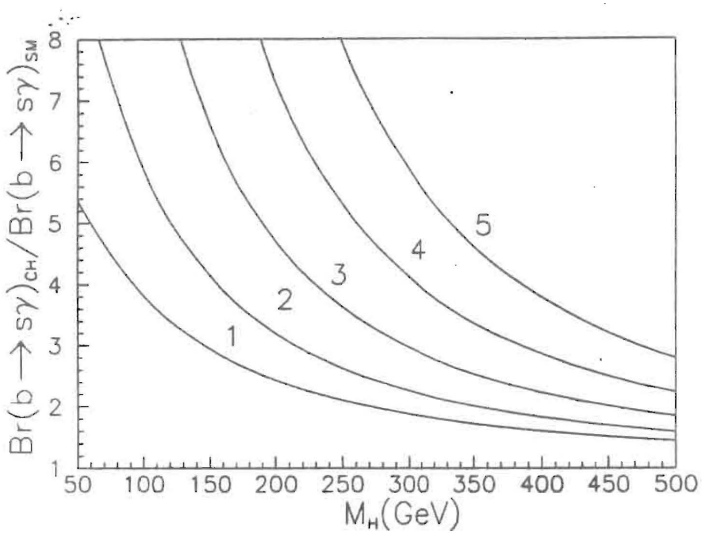

Fig. 6. $\mathrm{Br}(b \to s\gamma)_{THDM}/\mathrm{Br}(b \to s\gamma)_{SM}$ as a function of m_H for different values of ξ, $m_t = 140GeV$.

For the decay $K^+ \to \pi^+\nu\bar{\nu}$, no important contribution from the minimal supersymmetric model can be expected.[40] Note that in non-minimal supersymmetric models these conclusions do not hold as there is a lot more freedom in the choice of the parameters of the model and there are many other particles that can contribute to rare decays. For example in E_6 models, there are possible tree level contributions from leptoquarks. These models are very poorly constrained such that present experimental bounds can be saturated.[40] An example of a leptoquark model (although not E_6 susy) will be discussed in the next section in the context of CP violating models. For that particular leptoquark a large enhancement in $P_L(K^+ \to \pi^+\mu^+\mu^-)$ is possible.

Another popular model is the Left-Right symmetric model. New contributions to rare decays arise from introducing the W_R in the box or from $W_L - W_R$ mixing. Also since these models necessarily feature a more complicated Higgs structure both charged Higgs and neutral Higgs could play a role in rare decays. In general we can conclude that with the present bounds on the Left-Right model parameters there are no significant enhancements to rare decays.[41]

A summary of the predictions for various processes in and beyond the standard model are given in Table 7. In this table a value st(standard) indicates that contributions from new physics can be neglected while large refers to a possible strong enhancement which is basically unconstrained by the present data. For the standard and charged Higgs models, the predictions for two different values of f_B are presented. The models considered include the THDM with $m_H = 150GeV$, $\xi = 1$ (note that for a different choice of parameters larger enhancements are possible), the Left-Right model with $M_R = 1.6TeV$ and $\xi = .004$, the minimal supersymmetric model and the leptoquark model describe in the following section.

TABLE 7a. Predictions for various rare decays, $\sqrt{B_B}f_B = 130 \pm 40MeV$.

	Standard	Charged Higgs	Left-Right	MSSM	Leptoquark
$10^{10}Br(K^+ \to \pi^+\nu\bar{\nu})$	$.3 - 2.2$	$.4 - 2.$	st	st	st
$10^9 Br(K_L \to \mu\bar{\mu})$	$.2 - 1.$	$.18 - .9$	st	st	st
$10^3 R_L(K^+ \to \pi^+\mu^+\mu^-)$	$.6 - 3.$	$.8 - 2.7$	st	st	large
$10^4 Br(b \to s\gamma)$	3.5	10.	6.	10.	st
$b \to d\gamma/b \to s\gamma$	.015-.1	.016-.07	-	-	-
$10^5 Br(b \to s\nu\bar{\nu})$	3.5	4.6	4.5	st	st

TABLE 7b. Predictions for various rare decays $\sqrt{B_B}f_B = 130 \pm 40MeV$.

	Standard	Charged Higgs
$10^{10}Br(K^+ \to \pi^+\nu\bar{\nu})$	$.3 - 3.5$	$.4 - 3.8$
$10^9 Br(K_L \to \mu\bar{\mu})$	$.14 - 1.8$	$.2 - 2.5$
$10^3 R_L(K^+ \to \pi^+\mu^+\mu^-)$	$.6 - 4.3$	$.9 - 5.2$
$10^4 Br(b \to s\gamma)$	3.5	10.
$b \to d\gamma/b \to s\gamma$	.015-.2	.015-.18
$10^5 Br(b \to s\nu\bar{\nu})$	3.5	4.6

4.3. *Models with new source of CP Violation*

This class of models include all models where an additional phase can be introduced in the Lagrangian. In multiple Higgs models there can be spontaneous CP violation due to a phase in the relative vev of the neutral scalars or there can be a phase in the charged Higgs mixing matrix. In Left-Right models a phase can be introduced in the gauge bosons mixing matrix as well as in the Higgs sector. Finally, just as in the standard model phases can come from Yukawa couplings, these can be non-standard in the sense that they arise in the couplings of new particles (such as leptoquarks) and the standard fermions. It is this last source of CP violation that I will emphasize here. The possible CP violating observables are, besides the rate of $K_L \to \pi^0\nu\bar{\nu}$, the polarizations in $K^+ \to \pi^+\mu^+\mu^-$(transverse or two-spin correlation),[21] the transverse polarization in $K_{\mu 3}$[42] and the longitudinal polarization in $K_L \to \mu\bar{\mu}$.[43] The predictions from various models are presented in Table 8. Those prediction depend very much on the details of the models which are given in the appropriate references.

TABLE 8. Predictions for various CP violating processes.

	$K_L \to \pi^0\nu\bar{\nu}$	$K^+ \to \pi^0\bar{\mu}\nu$ P_T	$K^+ \to \pi^+\mu^+\mu^-$ P_2	$K_L \to \mu\bar{\mu}$ P_L
Standard	$.02 - .8 \times 10^{-10}$	10^{-8}	$1. - 3.5 \times 10^{-2}$	$< 5 \times 10^{-4}$
Charged Higgs	$.02 - 1.6 \times 10^{-10}$	-	$1 - 7 \times 10^{-2}$	small
Multi-Higgs	-	8×10^{-3}	-	1×10^{-2}
Left-Right	-	small	8×10^{-4}	2×10^{-2}
SUSY E_6	-	small	10^{-3}	7×10^{-2}
Leptoquark	st	large	large	small
Reference	13	42	21	43

As an example, consider a model with a leptoquark that transforms as $\phi_1 = (3, 2, 7/3)$ under the standard $SU(3)XSU(2)XU(1)$ symmetry. The Lagrangian containing the Yukawa couplings has the form

$$\mathcal{L} = (\lambda_1 \overline{Q}_L e_R + \lambda_1' \overline{u}_L L_L)\phi_1 + h.c. \tag{21}$$

where the coefficients λ are in general complex and the CP violation arises from this phase in addition to the CKM phase. Note that even with real coefficients such a leptoquark could show up in $P_L(K^+ \to \pi^+\mu^+\mu^-)$.[25] Taking into account the present constraints on CP conserving flavour-changing or flavour-conserving processes we can conclude that for this particular model, the present bounds can be evaded and very large polarizations could occur. This is not a general feature of leptoquark models and the predictions have to be studied case by case. Nevertheless some general statements can be made. One can show that in $K^+ \to \pi^+\mu^+\mu^-$, the two-spin correlation which comes from the interference between the one-photon diagram with charm and the Z-penguin and W-box diagrams with top[44] can be large only in models with effective scalar interactions. This is true also for the transverse polarization in $K_{\mu 3}$ where one can easily show that it has to be extremely small in models with effective V or A interactions such as the SM or Left-Right models.[45]

5. Conclusion

To perform precise tests of the standard model and to probe new physics more precise measurements of rare K and B decays are essential. As in any loop process the source of new physics will not be easily determined especially if no measurement above the standard model level is observed. However combining results of many decays would be very useful since various models of new physics have different effects on rare decays. Certainly there is the possibility of large enhancements from Beyond the Standard Model especially in rare B decays. New sources of CP violation could possibly show up in polarization measurements so efforts to make these should be pursued seriously.

I thank C.Q. Geng, D. London and P. Turcotte for useful discussions. I further thank P.Turcotte for his help in producing most of the figures. This work was supported in part by the Natural Science and Engineering Research Council of Canada.

References

1. A.J. Buras and M. Harlander, to appear in *Heavy Flavors*, eds. A.J. Buras and M. Lindner (World Scientific).
2. Particle Data Group, *Phys. Rev.* **D48** (1992) 1.
3. L. Wolfenstein, *Phys. Rev. Lett.* **51** (1983) 1945.
4. W. Marciano, *these proceedings*.
5. H. Albrecht *et al.*, *Phys. Lett.* **B241** (1990) 278;R. Fulton *et al.*, *Phys. Rev. Lett.* **64** (1990) 16.
6. G. Buchalla, A.J.Buras and M.K. Harlander, *Nucl. Phys.* **B337** (1990) 313.
7. G. Bélanger and C.Q. Geng, *Phys.Rev.* **D43** (1991) 140.
8. C. Q. Geng and P. Turcotte, *Phys. Lett.* **B278** (1992) 330.
9. C.S. Kim, J.L. Rosner and C.P. Yuan, *Phys. Rev.* **D42** (1990) 96; K.R. Schubert, *Prog. Part. Nucl. Phys.* **21** (1988) 3.
10. C. Alexandrou *et al.*,*Phys. Lett.* **B256** (1991) 60; C. Allton *et al.*, *Nucl. Phys.* **B349** (1991) 1958; C. Bernard *et al.*, talk given at Intern. Symp. Lattice. 90, Tallahassee, Florida (1990).
11. S. Capstick and S. Godfrey, *Phys. Rev.* **D41** (1990) 2856; S. Narison, *Phys. Lett.* **B198** (1987) 104; D. Silverman and H. Yao, *Phys. Rev.* **D38** (1988) 214.
12. G. Harris and J. Rosner, *Phys. Rev.* **D45** (1992) 946.
13. G. Bélanger, C.Q. Geng, P. Turcotte, to appear in *Phys. Rev.* **D46** (1992).
14. F. Gilman and Y. Nir, *Annual Review of Nucl. Part. Science* **40** (1990) 213.
15. T. Inagiki, in Proc. of *Joint Intern. Lepton-Photon Symp. & Euro. Conf. on High Energy Physics*, eds. S. Hegarty, K. Potter, E. Quercigh (World Scientific 1992) 586;W. Molzon, *ibid.* 581.
16. P. Meyers, preprint PRINCETON-HEP-91-02 (1991).
17. D. Kreinick, *these proceedings*.
18. C.O. Dib, *Phys. Lett.* **B282** (1992) 201.
19. L. Littenberg, *Phys. Rev.* **D39** (1989) 3322.
20. T. Inagiki, KEK Workshop on Rare Kaon Decays, KEK Dec. 10-11, 1991; K. Arisaka *ibid.*, Y. Hsiung, *ibid.*.
21. P. Agrawal, J.N.Ng, G. Bélanger and C.Q. Geng, *Phys. Rev. Lett.* **67** (1991) 537; *ibid.*, *Phys. Rev.* **D45** (1992) 2383.
22. G. Bélanger and C.Q. Geng, *these proceedings*.

23. Y. Kuno, private communication.
24. P. Ko, *Phys. Rev.* **D45** (1992) 174.
25. G. Bélanger, C.Q. Geng and P. Turcotte, preprint UdeM-LPN-TH90 (1992).
26. S. Bertolini, F. Borzumati and A. Masiero, *Phys. Rev. Lett.* **59** (1987) 180.
27. B. Grinstein, R. Springer and M.B. Wise, *Phys. Lett.* **202B** (1988) 138; N.G. Deshpande *et al.* Phys. Rev. Lett. **59** (1987) 183.
28. A. Ali, preprint DESY 92-048 (1992); A. Ali, preprint DESY 92-058 (1992).
29. W.S. Hou, R. Willey and A. Soni, *Phys. Rev. Lett.* **58** (1987) 1608.
30. J. Hewett, S. Nandi and T. Rizzo, *Phys. Rev.* **D39** (1989) 250; M.Misiak and Z. Placienuk, *Phys. Lett.* **B288** (1991) 429; X.G. He, T. D. Nguyen and R. R. Volkas, *Phys. Rev.* **D38** (1988) 814; W.H. Hou and R.S. Willey, *Nucl. Phys.* **B326** (1989) 54.
31. R.R. Volkas, A.J. Davies and G.C. Joshi, *Phys. Rev.* **D38** (1988) 311; P. Krawczyk and S. Pokorski, *Nucl. Phys.* **B364** (1991) 10; L. Hall and L. Randall, *Nucl. Phys.* **B274** (1986) 157.
32. A. Buras, P. Krawczyk, M. Lautenbacher and C. Salazar, *Nucl. Phys.* **B337** (1990) 284.
33. V. Barger, J. Hewett and R.J.N. Phillips, *Phys. Rev.* **D41** (1990) 3421.
34. P.Langacker, in *Proc. of 1990 DPF Summer Study on High-energy Physics, Research for the Decade, Snowmass Co 1990.*
35. W.S. Hou and R.S. Willey, *Phys. Lett. B* **202** (1988) 591.
36. G.Bélanger, C.Q. Geng and P. Turcotte, *these proceedings.*
37. C. Q. Geng, Invited talk at XXVI International Conference on High-energy physics, Dallas, Texas (1992).
38. C.Q. Geng and J.N.Ng, *Phys. Rev.* **D38** (1988) 2857.
39. S. Bertolini, F. Borzumati, A. Masiero and G. Ridolfi, *Nucl. Phys.* **B353** (1991) 591; S. Bertolini, preprint SISSA 42/92/EP.
40. I. Bigi and F. Gabbiani, *Nucl. Phys.* **B367** (1991) 3.
41. D. London and D. Wyler, *Phys. Lett.* **B232** (1989) 503; D. Cocolicchio *et al.*, *Phys. Rev.* **D40** (1989) 1477.
42. G. Bélanger, C.Q. Geng, *Phys. Rev.* **D44** (1991) 2789.
43. C.Q. Geng and J.N. Ng, *Phys. Rev.* **D42** (1990) 1509.
44. M. Savage and M.B. Wise, *Phys. Lett.* **250B** (1990) 151.
45. P. Castoldi, J.M. Frère and G.L. Kane *Phys. Rev.* **D39** (1989) 2633; M. Leurer *Phys. Rev. Lett.* **62** (1989) 1967.
46. J. Ellis and J.S. Hagelin, Nucl. Phys. **B217** (1987) 189.