FERMILAB
JUL 24 1997
LIBRARY

A NEW METHOD TO SEARCH FOR D^0-$\overline{D}^0$ MIXING[a]

UCLA-PPH-0076-6/97

JONG-KWAN WOO and DAVID B. CLINE
Department of Physics and Astronomy, Box 951647
University of California, Los Angeles, CA 90095-1647, USA

Several experimental works and theoretical calculations for D^0-$\overline{D}^0$ mixing have been done, since opposite sign dimuons event was reported in 1974-1975.[1] Over the past 20 years, persistent signal for same sign dimuons has been observed by backgrounds. But there is still a big gap between the upper bound of mass differences [$\Delta m(D^0$-$\overline{D}^0)$] and theoretical calcuations. We introduce a future experiment (especially FNAL E-803; COSMOS) using same sign dileptons with small hadronic energy. It will reduce the background and the gap between the upper bound of mass difference [$\Delta m(D^0$-$\overline{D}^0)$] and the theoretical calculations and give us unambiguous evidence for D^0-$\overline{D}^0$ mixing down to 10^{-3}.

UCLA-PPH-0076-6-97

1 Introduction

All of the neutral flavored mesons have been observed to mix (e.g., K^0-$\overline{K}^0$, B_d^0-$\overline{B}_d^0$, B_s^0-$\overline{B}_s^0$) except the charm system.[2-4] However, since charm was observed in HPWF[1] and opposite sign dimuons are observed at SPEAR, [5] D^0-$\overline{D}^0$ mixing has been studied. For SPEAR, a crude limit on charm flavor-changing weak neutral currents was reported.[6] Figure 1 shows us the progress of the experimental D^0-$\overline{D}^0$ mixing with time. But, results from E653-FNAL (1983) to an experiment (E791-FNAL, 1995) in Fig. 1 are in the flat line, which ranges from 0.4 to 1.2 × 10^{-2}. The most recent significant observation, which was done by CLEO II with the process $D^0 \to K^+\pi^-$, allows the D^0-$\overline{D}^0$ mixing to be in the same range.[7,8]

2 D^0-$\overline{D}^0$ Mixing and Same Sign Dimuons

We can search for D^0 using neutrino-induced single-D^0 production through the process $\nu_\mu + d \to \mu^- + c \to (c + \bar{u})D^0 \to \mu^+ + \nu_\mu + s$, which produces opposite-sign dimuons.[1] Now we propose a method to find D^0-$\overline{D}^0$ mixing using the process

$$\nu_\mu + d \to \mu^- + c \to (c + \bar{u})D^0$$
$$\hookrightarrow (\bar{c} + u)\overline{D}^0 \to \mu^- + \bar{\nu}_\mu + \bar{s},$$

which will produce (1) same sign dimuons and (2) a D^0 at the neutrino interaction vertex. The first observation of same sign dimuons was done by the HPWF group with two very high energy muons.[6,9] It now appears that the most likely signal above background will occur when the hadronic energy of an event is relatively low compared to the μ^- momentum $P_\mu/E_H \geq 10^{-1}$. We point out that near the threshold for charm production, the kinematics favor considerable energy transfer to the charmed particles

Fermilab Library
0 1160 0057420 6

[a]Presented at the UCLA International Symposium on Flavor-Changing Neutral Currents (Santa Monica, CA, Feb. 1997) and to be published in the *Proceedings* by World Scientific, Singapore.

in the neutrino interaction, giving energetic muons. We therefore, choose mainly a sample of data that has $P_\mu \geq 9$ to 10 GeV and $E_H > 100$ GeV from published reports.[9-14] Figure 2 shows us the ratio of $[(\mu^-\mu^-)/\mu^-]$ from experiments with this approximate cut,[9-14] and the level of same sign dimuons is the same as the current limits on D^0-$\overline{D}^0$ mixing from other methods like $D^0 \rightarrow K^+\pi^-$,[7,8] with an expected decay ratio of $\sim 3 \times 10^{-3}$ for forbidden decay.

3 Unique Search for D^0-$\overline{D}^0$ Mixing

We have shown some positive evidence for D^0-$\overline{D}^0$ mixing using a same-sign dimuon signal at the mixing level of $\sim 5 \times 10^{-3}$. Using an emulsion or other suitable tracing detector, we can test whether $D^0 \rightarrow \overline{D}^0 \rightarrow \mu^- + \overline{\nu}_\mu + \overline{s}$ has occurred and measure the mixing ratio. Certainly, FNAL E-803 (COSMOS) will carry out this search, and we expect that mixing occurs at the level of $\sim 5 \times 10^{-3}$ with a powerful magnetic spectrometer, a muon detector and an approximate 1-ton emulsion target.[15] COSMOS will produce charm particles of about 200,000 events. Of these, about 80,000 events are expected as D^0's. We expect 400 $\overline{D}^0$ events with an effective mixing level of $\sim 5 \times 10^{-3}$ for D^0-$\overline{D}^0$ mixing.

Figure 3 and Table 1 show us the theoretical calculations for mass difference $\Delta m(D^0\text{-}\overline{D}^0)$, the upper bound for the first as well as for the recent experiment reports. Even though the upper bounds of experimental mass difference $\Delta m(D^0\text{-}\overline{D}^0)$ still cover most of the theoretical calculations for $\Delta m(D^0\text{-}\overline{D}^0)$, these values do not match each other. For previous experiments, the ratio of $(D^0\text{-}\overline{D}^0)/D^0$ was calculated from the ratio of $[(\mu^-\mu^-)/\mu^-]$ without verifying whether the μ^-'s come from D^0 or $\overline{D}^0$. With identification of D^0 and $\overline{D}^0$ particles, we can measure the D^0-$\overline{D}^0$ mixing more sensitively than before. The maximum flight length of a D^0 particle is around 1.5×10^{-4} m, because the mean lifetime of D^0 is $(5\pm1) \times 10^{-13}$ s.[16] Therefore, emulsion can make the direct evidence of D^0-$\overline{D}^0$ mixing visible with good resolution. Even though there was no report for measuring D^0-$\overline{D}^0$ mixing using emulsion, the method to identify D mesons inside of emulsion was already reported.[17-19] Figures 4 and 5 show another D meson's trace, and the D^0-$\overline{D}^0$ event, generated by GEANT simulation, in the emulsion.

4 Conclusions

The future experiment (COSMOS; FNAL E-803) for searching for D^0-$\overline{D}^0$ mixing with the emulsion target will make the effective mixing level be $\sim 5 \times 10^{-3}$ or below, and the experimental value will be much closer to the theoretical value.

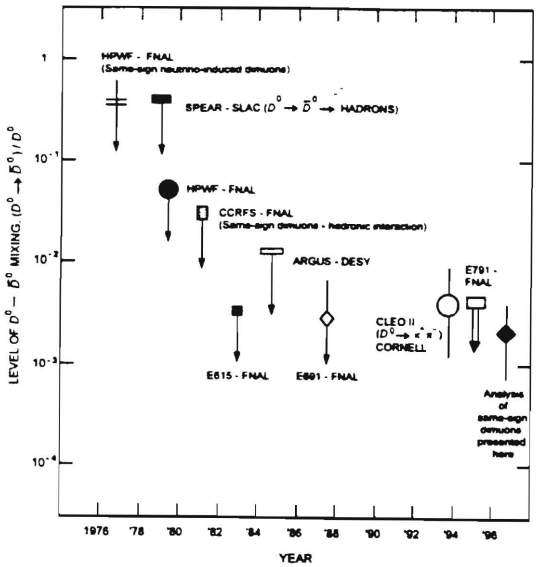

Figure 1: A set of results on the search for D^0-$\overline{D}^0$ mixing.[15]

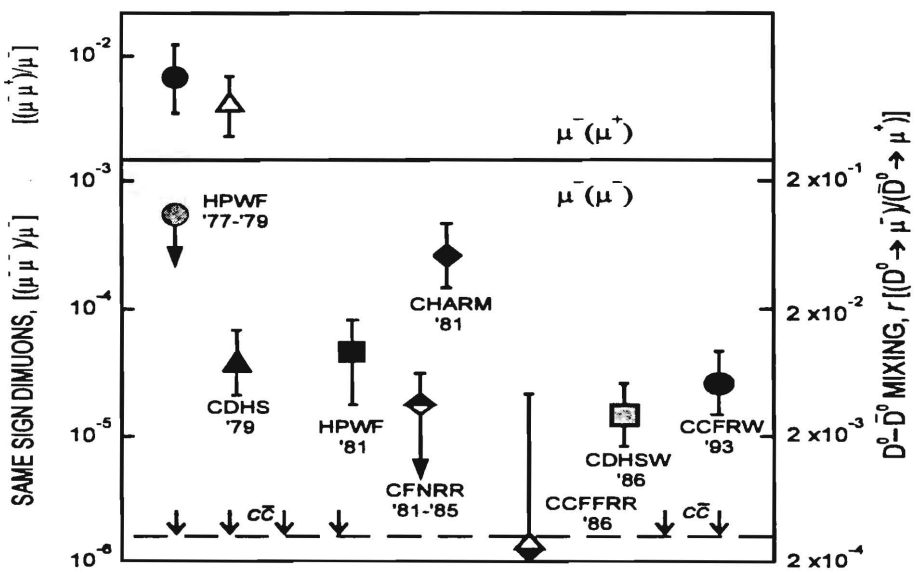

Figure 2: Progress in the study of selected same-sign dimuon events from Refs. 6,9,15, and 26.

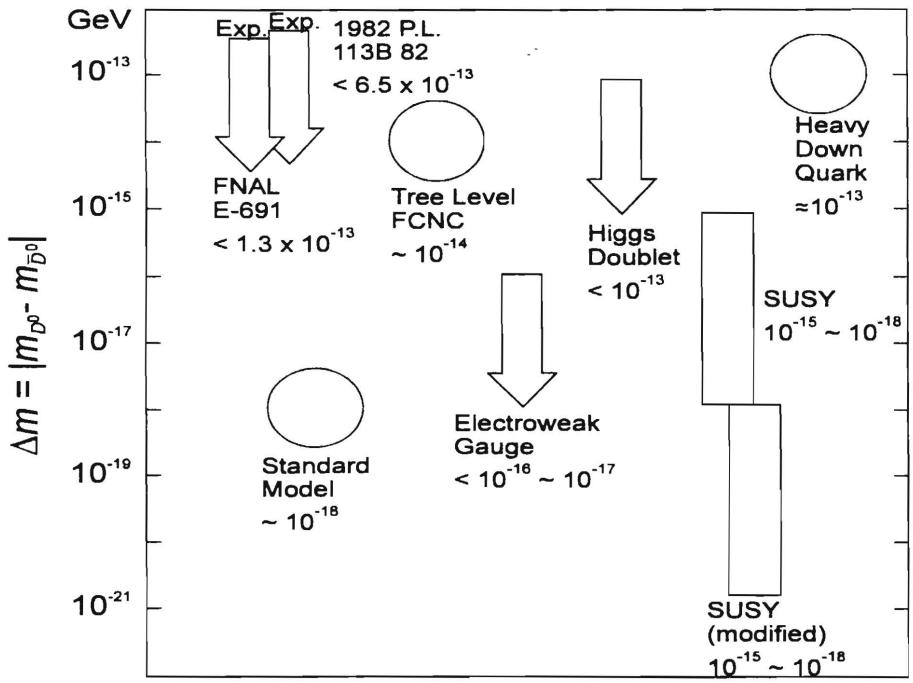

Figure 3: Mass difference of D^0-$\overline{D}^0$ from theoretical and experimental value for D^0-$\overline{D}^0$ mixing.

Table 1: Theoretical and experimental value for D^0-$\overline{D}^0$ mixing [$\Delta m(D^0$-$\overline{D}^0)$].

Theory	$\Delta m(D^0$-$\overline{D}^0)$	Ref.
Tree level FCNC	$\approx 8 \times 10^{-14}$ GeV	20
Higgs doublet	$<0.8 \times 10^{-13}$ $(\sin\theta_D/\sin\theta_k)$ GeV	21
Heavy down quark	$\approx 10^{-13}$ GeV	22
SUSY	$\sim 10^{-18}$ - $\sim 10^{-21}$ GeV	23
SUSY (change parameter)	$\sim 10^{-15}$ - $\sim 10^{-18}$ GeV	23
Electroweak gauge	$<10^{-16}$ - $\sim 10^{-17}$ GeV	24
Standard model	$\sim 10^{-18}$ GeV	24
Experiment (1982)	$<6.5 \times 10^{-13}$ GeV	25
Experiment (1995)	$<1.3 \times 10^{-13}$ GeV	20

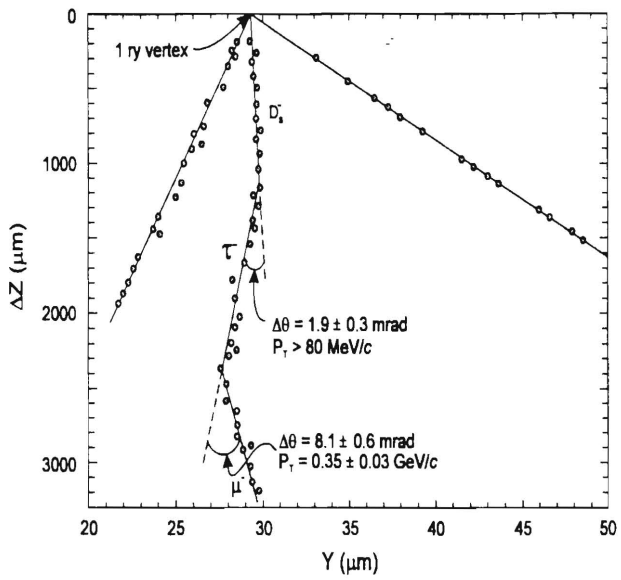

Figure 4: Candidate of a tauonic decay of D_s found by the grain by grain measurement.[18]

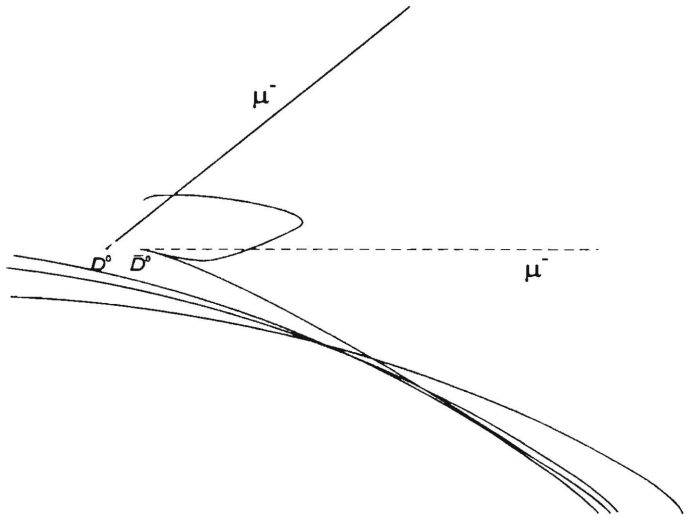

Figure 5: Candidate of a simulated D^0-$\overline{D}^0$ event in the emulsion generated by GEANT.

References

1. A. Benvenuti *at al.*, *Phys. Rev. Lett.* **35**, 1202 (1975).
2. See for example, M.K. Gaillard and B.W. Lee, *Phys. Rev.* D **10**, 897 (1974); A. Datta, *Phys. Lett.* B **154**, 287 (1985); I. Bigi and A.I. Sanda, *Phys. Lett.* B **171**, 320 (1986).
3. C. Albagar *et al.*, *Phys. Lett.* **186**, 247 (1987).
4. H. Albrecht *et al.*, *Phys. Lett.* B **192**, 245 (1987).
5. G. Goldhaber *at al.*, *Phys. Lett.* B **69**, 503 (1977).
6. D.B. Cline, Brookhaven National Laboratory report BNL 505098 (1976) p. D37; also Talk at Oxford, 1978, published by Oxford Physics Dept.; also D.B. Cline, Comments *Nucl. Part. Phys.* **16**, 133 (1986).
7. D. Cinabro *et al.*, *Phys. Rev. Lett.* **72**, 1406 (1994).
8. T. Liu, "D^0-$\overline{D}^0$ Mixing and Doubly Cabibbo Suppressed Decay," Ph.D. thesis, Harvard University report HUHEPL-20 (May 1995).
9. See for example, A. Benvenuti *et al.*, *Phys. Rev. Lett.* **41**, 725 (1978).
10. K. Lang *et al.*, *Z. Phys.* C **33**, 483 (1987).
11. J.G.H. DeGroot *et al.*, *Phys. Lett.* B **86**, 103 (1979).
12. T. Trinko *et al.*, *Phys. Rev.* D **23**, 1889 (1981). (In this experiment, we attempted to extrapolate the data to an infinte density to remove decays and punch-through and thus extract a real, prompt muon signal.)
13. M. Jonker *at al.*, *Phys. Lett.* B **107**, 241 (1981).
14. H. Burkhart *et al.*, *Z. Phys.* C **31**, 39 (1986).
15. COSMOS (E803) proposal to Fermilab (1994, unpublished); also see D. Cline, J. Park, J-K. Woo, "An Unambiguous Method to Detect D^0-$\overline{D}^0$ Mixing," UCLA report (in preparation); also T. Bolton, Kansas State University, private communication (1995).
16. D. Perkins *Introduction to High Energy Physics*, 3rd ed. (Addison-Wesley, Menlo Park, CA, 1987).
17. K. Komata, J-K. Woo *et al.*, *Nucl. Inst. Methods* A **289**, 146 (1990).
18. K. Komata, J-K. Woo *et al.*, *Nucl. Inst. Methods* B **93**, 340 (1994).
19. K. Komata, J-K. Woo *et al.*, *Phys. Lett.* B **263**(3,4), 573 (1991).
20. FNALE-691 DATA Fermilab Conference-95/281-T HEP-PH/9508349.
21. L.L. Chau, *Phys. Rep.* **95**, 1 (1983).
22. L. Montanet *et al.*, Particle Data Group, *Phys. Rev.* D **50**, 1173 (1994).
23. J.M. Gerard, W. Grimus, A. Raychaudhuri, and G. Zoupanos, *Phys. Lett.* B **140**, 349 (1984).
24. A. Datta and K. Neogy, *Phys. Rev.* D **20**, 2441 (1979).
25. A. Bodek *at al.*, *Phys. Lett.* B **113**, 82 (1982).
26. P. Sandlar *et al.*, *Z. Phys.* C **57**, 1 (1993).