Fermilab Library
0 1160 0011304 7

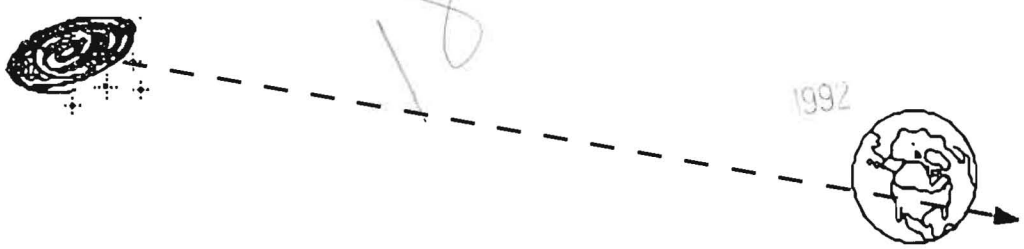

Particle Astrophysics Preprint

The University of California
Irvine, CA 92717, USA

Preprint #UCI-PA-92-1

Antarctic Muon and Neutrino Detector Array

S. W. Barwick, J. Lynch, R. Porrata, G. Yodh, D. Lowder, T. Miller, P.B Price, A. Richards, S. Snowden-Ifft, A. Westphal, F. Halzen, J. Jacobsen, V. Kandhadai, I. Liubarsky, R. Morse, and S. Tilav

To be published in the proceedings of the "Gamma Ray and Neutrino Cosmology" Workshop held at UCLA, California, February 13-15, 1992.

HOJVAT
RAMBERG
GILMAN
220
122
352

Antarctic Muon and Neutrino Detector Array

S. Barwick, J. Lynch, R. Porrata, G. Yodh
The University of California, Irvine

D. Lowder, T. Miller, B. Price, A. Richards, D. Snowden-Ifft, A. Westphal
The University of California, Berkeley

F. Halzen, J. Jacobsen, V. Kandhadai, I. Liubarsky, R. Morse, S. Tilav
The University of Wisconsin, Madison

ABSTRACT

High energy neutrino radiation provides us with a tomographic tool to scan the Universe. Sites shielded by a few hundred grams of matter are not revealed by light, whatever its wavelength. High energy neutrinos are decay products of pions and therefore are a signature of the most energetic cosmic processes. It is proposed to instrument the polar ice cap as a low-noise particle detector sensing the Cherenkov light from neutrino-induced muons. This paper describes the successful operation of a prototype string of optical modules that were deployed on January 17, 1992 at the South Pole. The advantages of the method are intriguing. The ice has good optical transmission and provides a mechanical structure to support the instrument. Ice is a quiet, sterile medium where photomultiplier tubes experience background counting rates smaller than lake or ocean water by as much as two orders of magnitude. The low background allows us to develop electronics and triggering schemes that are simple and can be installed at the surface and thus remain accessible after deployment of the PMTs under 1 km of ice. It is proposed to construct a detector that will have an area over one order of magnitude larger than the largest of the present generation of underground detectors.

1. Introduction

The reasons for commissioning the high energy neutrino telescope AMANDA (Antarctic Muon and Neutrino Detector Array) are intriguing:

-- as photons do not carry any information on cosmic sites shielded from our view by more than a few hundred grams of intervening matter, the possibility of using weakly interacting neutrinos as a window on the Universe must be explored,

-- neutrinos are the decay products of pions and therefore they are a signature of the most energetic cosmic processes,

-- the neutrino sky could contain objects with no observational counterpart in any wavelength of light.

High energy neutrino telescopes should be built because the heavens have not been searched using this technique. As was the case with the first radiotelescopes, for instance, there is a strong possibility that unexpected discoveries will be made. Nevertheless, the discovery potential of a high energy neutrino detector should be especially high as neutrinos provide us with a first tomographic tool to study the Universe. A dramatic example is provided by active galactic nuclei which, in some models, are predicted to dominate the neutrino sky above an energy of 50 TeV. Such sources are opaque to high

energy gamma rays, *i.e.*the high energy photons, produced along with the neutrinos in the decay of pions, are absorbed before exiting the source.

The proposed detector will concentrate on neutrino astronomy at the smallest wavelengths detecting particles in the 100 GeV to 1 PeV energy range. Doing gamma ray astronomy in this energy range has proven to be challenging[1]. Expected fluxes of gamma rays in this energy range, whose experimental signature is provided by the air cascades initiated by the photons, have to be isolated from a cosmic ray background likely to exceed the signals by over two orders of magnitude. In the corresponding energy range the flux of background neutrinos, generated by pion decay in cosmic ray-induced atmospheric cascades, is extremely small and the fluxes of anticipated sources dominate the neutrino sky[2]. From a purely experimental point of view, neutrino astronomy is an attractive alternative as the telescopes look at a large fraction of the sky all the time. This is to be contrasted with gamma ray detectors such as Cherenkov telescopes which can typically scan a few degrees of the sky 10% of the time.

Although we strongly feel that these general reasons are compelling enough to justify the construction of high energy neutrino detectors, we will review the anticipated sources and the predicted neutrino fluxes in order to "scale" the size of the telescope. Such a review invariably concludes that 0.1 km^2 is the scale to be reached. Although the next generation of detectors is not aiming for such effective area, we feel strongly that no project should be initiated unless it can eventually reach this goal in a timely and cost-effective manner.

The AMANDA detector eminently satisfies this condition. We propose to use the large volumes of the polar ice cap as a low-noise particle detector sensing the Cherenkov light from neutrino-induced muons. The proposal is based on techniques which have been tested *in-situ* and for which the technology and the cost is understood. In a staged program we propose to deploy a 2000 m^2 detector first. It will consist of 3 strings of 19 photomultiplier tubes deployed under 1 km of ice at South Pole. Such a detector is larger in area than the combined Gran Sasso detectors. Its discovery potential is obvious since it is five times larger than "seasoned" detectors such as IMB and Kamiokande. Though not matching the low threshold of any of these detectors, it will be competitive at higher energies and will allow a first search for "serendipitous" sources. This detector will allow us to fine-tune our understanding of the technique and to scale up the telescope with the confidence that all the parameters have been reliably and quantitatively optimized. The first phase detector will enable us to study 3-dimensional track reconstruction, up-down muon discrimination and the like with real data and without exclusively relying on Monte Carlo simulations. We propose to add strings in the following 2 years to scale up the detector to reach an area exceeding 10^4 m^2.

The ratio of up-coming atmospheric neutrinos to down-going muons, which one might take as a measure of the background, is 2×10^{-6} at 1 km. Even at this level of discrimination, only one down-going event will be mis-identified for each two up-coming neutrinos. Such random contamination causes no problem when searching for discrete sources. AMANDA will be greatly helped by the reduced noise rates of PMTs in -55C ice which is free of any radioactive background.

2. Sources of Neutrinos: Scaling Neutrino Telescopes

High energy neutrinos are produced in heavenly beam dumps. As in Earth laboratories the set-up consists of an accelerator aiming a beam at a target in which pions are produced which subsequently decay into roughly equal numbers of photons and neutrinos. Much studied cosmic beam dumps include binary X-ray sources where a collapsed object accelerates beams of particles ---perhaps in the high fields of a pulsar or through conversion of the gravitational energy from accretion of matter from the companion star--- into a target provided by the accreting matter. The pulsar in a young supernova can accelerate particles into the surrounding shell. A massive black hole can power beams into the dense photon cocoon in a radio-galaxy. In all such systems neutral particles, *i.e.* photons, neutrinos and neutrons are emitted in directional beams, while stable charged particles such as protons and electrons leaving the source spiral in galactic or extra-galactic magnetic fields. Unlike the neutrino flux, the γ-ray flux is only observed if it has not been attenuated by intervening matter in the source or on its way to Earth by the cosmic photon background.

2.1 Accelerator(s) of PeV cosmic rays:

Although observations of PeV and EeV gamma-rays are still controversial, cosmic rays of such energies do exist and their origin is at present a mystery. The cosmic-ray spectrum can be understood, up to perhaps 1000 TeV, in terms of shock wave acceleration in galactic supernova remnants. Although the spectrum shows a kink at this energy, usually referred to as the "knee", cosmic rays with much higher energies are observed and cannot be accounted for by this mechanism. This is simply a matter of dimensional analysis. Let us assume that cosmic rays above the knee, which can not be accounted for by supernova remnants, are produced in a galactic accelerator(s) whose luminosity supplies the observed energy density of the galaxy in PeV cosmic rays. Such a source will also produce neutrinos and one can readily estimate their flux. Assuming acceleration in the center of the galaxy and a E^{-2} spectrum,one obtains(see ref 2)

$$dN_\nu/dE = 4\times10^{-10}/E^2 \ \mathrm{cm^{-2}s^{-1}TeV^{-1}}$$

2.2 Sources of EeV Cosmic Rays: Active Galactic Nuclei

We next draw attention to the structure in the cosmic ray spectrum in the vicinity of 10 EeV, referred to as the "ankle". The galaxy does not magnetically confine protons of this energy and cosmic rays above the ankle are supposed to originate in extra-galactic accelerators. There is experimental support for this claim. Nearby active galactic nuclei are obvious candidate sources. Again, if they yield the observed EeV cosmic rays, they will be sources of neutrinos. One possible blueprint for an AGN accelerator has been given by Biermann[4]. The accelerator is a massive black hole in the center of the AGN which is the source of the jets familiar from radio observations. Accelerated protons in the jets produce pions on a target provided by the γ-rays in the radio lobes. Pion photoproduction is therefore the origin of photon and neutrino beams, although Biermann finds that the target

is optically thick and high energy photons are unlikely to escape the source. The luminosity of the accelerator can be adjusted to yield the observed EeV cosmic ray spectrum at Earth after propagation of the source flux through the 3K cosmic photon background. A spectrum with maximum at 50 EeV is obtained followed by a sharp cutoff consistent with observation. The neutrino flux obtained from such a source is in the end very similar to the one previously calculated for our galactic accelerator of PeV cosmic rays. The reason is not difficult to understand. Nearby AGN's such as 3C273 are at a distance of 100 Mpc. For equal luminosity this represents a penalty in solid angle for the flux at Earth of a factor $(10^4)^2$ relative to a galactic source at a nominal distance of 10 kpc. A similar neutrino flux is nevertheless obtained as the AGN's must have proton luminosities 10^8 larger in order to accommodate the observed EeV cosmic rays.

2.3 Young Supernovae

After a few months, when the envelope of a young supernova has a depth of about one proton mean free path, it may become a high energy accelerator. For example, beams accelerated by a millisecond pulsar of 4×10^{34} erg/s luminosity can produce pions in this shell. The flux of decay neutrinos is about 1 per week in 1000 m^2 telescope assuming that 1% of the luminosity goes into proton acceleration. This flux would be generated for several months and is observable, even during the initial 3-string phase of the AMANDA detector.

2.4 Diffuse Cosmic Neutrino Fluxes

Recently Stecker and collaborators[5] have pointed out that radio-quiet AGN's such as NGC4151 could also be powerful sources of neutrinos. While not as spectacular as the radio-loud sources, they constitute a cast of hundreds and their combined flux can yield a very large diffuse glow in the neutrino sky. The flux is predicted to dominate atmospheric neutrinos above an energy of about 50 TeV. It dwarfs even the most optimistic predictions[6] for the much studied diffuse neutrino flux generated by extra-galactic cosmic rays interacting over cosmic time with the 3K background.

In order to find sources of high energy neutrinos the existence of an accelerated proton beam capable of producing pions is required. In this sense AGN's look like credible candidates. Heating of the dusty disk in AGN's over distances of several hundred parsecs is quite common and very hard to explain. Models where protons are accelerated can naturally accommodate this phenomenon which is clearly observed in infrared emission. As previously argued, they are also the plausible sources of extra-galactic cosmic rays.

2.5 Neutrinos Emitted by the Galactic Plane

High energy cosmic rays do, by their very existence, guarantee the galactic hot spots of high energy cosmic neutrinos[7]. They interact with the interstellar gas and are therefore inevitably accompanied by a flux of diffuse photons and neutrinos which are the decay products of the pions produced in these interactions. One predicts 10 events per year per steradian above 1 TeV in a 0.1 km^2 detector. Although diffuse, these neutrinos are

concentrated in the plane of the galaxy and have to be separated from the isotropic events resulting from the atmospheric neutrino background. The event rates are in practice low as the galactic plane covers roughly 0.1 steradian and "hot spots" like Orion 0.01 steradian. For a South Pole detector we predict 5 events per year in 10^5 m^2 area from the galactic plane. On the other hand, the source is guaranteed and the event rate might be significantly higher if there are regions of the galaxy where the cosmic ray spectrum is flatter than the local spectrum as suggested by some models. The rate is further increased if baryonic dark matter in the halo of our galaxy provides cosmic rays with additional target material.

2.6 Neutrino Telescopes as Dark Matter Detectors

One of the many alleged virtues of supersymmetry is that it provides a natural particle candidate for dark matter: the neutralino. It is arguably the leading dark matter candidate from both the cosmological and particle-physics point of view. The mass of the neutralino is not as arbitrary as it once was. A combination of unsuccessful searches in non-accelerator and accelerator experiments imply that such particles have masses of tens of GeV or more. If they have TeV masses they will overclose the Universe. It is therefore important to ask whether a neutrino telescope is sensitive to dark matter in the 100 GeV mass range. They can only be detected indirectly. Such neutralinos in our galactic halo will be gravitationally captured by scattering off elements in the Sun or the Earth. Annihilation of trapped neutralinos will produce a neutrino flux which can be detected and thus provide indirect evidence for dark matter. Calculations[8] reveal that even relatively small neutrino telescopes have a discovery potential. A neutrino telescope of 10^5 m^2 or more is a superb instrument to search for supersymmetric dark matter. Its failure to detect it would force supersymmetrists to fine-tune their models to small regions of parameter space.

2.7 Neutrino oscillations

AMANDA, like other surface neutrino telescopes, will have the unique capability of detecting atmospheric neutrinos and muons of similar energy. In a ν_μ-oscillation experiment we can therefore tag the π progenitor of the neutrino by detecting the muon produced in the same decay. In practice one measures the ratio of up- to down-going neutrinos. This eliminates the model dependence of the measurement associated with the calculation of the primary cosmic ray neutrino flux. It has been shown that a 10^4 m^2 detector can probe the interesting parameter space $\delta m^2 \geq 10^{-3}$ eV^2 and $\sin^2 2\theta \geq 10^{-3}$ using this technique[9]. If the collection efficiency of the detector can be determined to an accuracy of less than 10% over all angles, AMANDA will make significant improvement in the neutrino oscillation limits.

2.8 Event Rates in a Generic 0.1 km^2 Detector: Synthesis

There is no doubt that, like existing underground detectors, future high energy neutrino telescopes can produce important results for astronomy, particle physics and cosmology. Our above list of candidate sources is far from exhaustive as we can also go on and dream of less mundane heavenly accelerators such as mini-black holes, cusp radiation by cosmic

strings, superconducting cosmic strings, heavy big bang relics, etc. We however feel that the construction of neutrino telescopes is justified on the basis that they provide astronomy with a first tomographic tool to study the Universe. The study of candidate sources is mostly useful in scaling the required size of the instrument. We therefore summarize our estimates in Table 1. Note that the numbers with "*" in the table are corrected for an error in the AGN luminosity used by Stecker *et al.* We use an updated neutrino flux that was calculated by R. Protheroe (private communication).

TABLE 1

Sources	Events per year in 0.1 km^2	
Diffuse Flux (per steradian)		
muon energy	atm. ν's	AGN
>10 GeV	5040	216*
>1 TeV	173	178*
also ν_e(6.3 PeV) + e -> W^-		0.62* per 1000 kton
Plane of Galaxy		
muon energy	atm. ν's	plane of galaxy
> 1 TeV	173	5-10
Point Sources		
Sources of PeV cosmic rays	120	
Sources of EeV cosmic rays (3C273)	190	
NGC4151 radio quiet AGN	10	
Atmospheric ν's in 1° Bin		
>1 TeV	5×10^{-2}	
>10 GeV	1.6	
>2.5 GeV	3	
500 GeV WIMPs from the Sun	10-1000	

The logical conclusion to be drawn from the compilation is that one should not deploy a detector unless the technique allows one to reach the 0.1 km^2 scale in a timely and cost effective manner. The atmospheric neutrino rates are comfortably large and allow calibration and continuous monitoring of the detector. The atmospheric background in point source searches is generally small because, for energies of a TeV or more, the neutrino direction can be reconstructed to 1 degree or better.

3. Neutrino Telescopes Using Ice as a Particle Detector

At present, the most cost-effective method to commission neutrino telescopes with effective area of order 0.1 km^2 is to use the polar ice caps as a low-noise particle detector[10]. The AMANDA detector proposes to reach this goal by instrumenting a large volume of South Pole ice. The experimental challenge of neutrino astronomy is to conceive of large-area particle detectors in an environment shielded from the large cosmic ray backgrounds at the surface of the Earth. We have demonstrated (see section 4) the possibility of taking advantage of the clear optical characteristics of deep polar ice in order to use it as a medium

in which to sense the Cherenkov light generated by muons produced by cosmic neutrinos interacting in the rock or ice under the detector. Since TeV neutrinos will produce muons traveling hundreds of meters in ice, the effective volume of such a detector is enormous even for a relatively modest volume of active detector which would consist of photomultipliers identifying muons by mapping their Cherenkov cone. The muon trajectory determines the parent neutrino arrival direction to a precision of order 1 degree. A simple, and now proven, procedure to construct a neutrino telescope will use a hot water drill a borehole into the ice to a depth of 1 km. Since it is not practical to remove the water from the borehole, a string of photomultiplier tubes must be lowered to depth before the water refreezes (which takes about 4 days). Good optical contact is achieved when the water slowly refreezes under pressure, thus insuring that an insignificant amount of bubbles will form locally near the sensors.

There are significant science advantages to performing such experiments in the South Pole ice:

1. Ice is a quiet, sterile medium. There are no sources of background photons such as ^{40}K or bioluminescence. The PMT background counting rate is dominated by dark noise which is typically 2.5 kHz (for 8 inch PMTs at 0.3 pe discrimination) in the constant -55C temperature. With background rates in single PMTs reduced by two orders of magnitude compared to deep ocean water, fewer coincidences are required to define muon tracks. This allows us to instrument the same effective area with a reduced number of PMTs. Since the background rates are small, extremely simple trigger schemes can be implemented with off-the-shelf, inexpensive electronics.

2. Tests performed (see section 4) are consistent with the expectation that the optical properties of *in-situ* ice are comparable to pure polycrystalline ice grown in the laboratory. Such ice has good optical transmission with attenuation length of 25 m around 470 nm. It is known that ice cores retrieved from a depth of 1 km are bubble-free and photographs show them to be optically transparent. Gow *et al.*[11] have mapped bubble structure of the Antarctic ice. At depth between 800 to 1100 meters, trapped air is forced into the ice lattice forming nitrogen and oxygen hydrates (molecules of $N_2O_2*6H_2O$). Approximately 0.06% of the ice changes from the usual hexagonal structure into a cubic crystal, called a clathrate hydrate, to accommodate the hydrate molecules[12]. The remaining ice retains its structure and becomes bubble-free. Moreover, our tests of *in-situ* ice show that bubbles trapped locally in the ice during the installation of PMTs do not have significant impact on the optical sensitivity, as the light is mostly scattered forward with negligible absorption.

3. The ice forms a mechanical structure for the instrument, enabling all active electronics to be placed directly above at the surface, putting them within reach for adjustment and maintenance. The deployment of the optical sensors is a straightforward procedure because the strings can be pre-assembled and stretched along the ground. It is then easy to check electrical and mechanical integrity of the system prior to deployment.

4. A cosmic source is observed continuously and remains at fixed zenith angle, making the subtraction of cosmic ray backgrounds extremely simple. The unique opportunity of uninterrupted observation of sources, not possible with gamma ray detectors, should be emphasized because some sources are expected to be impulsive and episodic with variations on perhaps several different time scales as is the case for X-ray binaries.

5. Instrumenting polar ice with phototubes allows the experiment to follow science: the detector can grow, be gradually increased in resolution or (alternatively) expanded in coverage over the essentially unlimited expanse of the stable icefields.

6. The detector views neutrinos upcoming through the Earth. These originate in northern hemisphere sources which are in the detector's field of view 24 hours a day. The best studied candidate sources are located in the northern hemisphere. The ultimate goal should be to scan the sky simultaneously with neutrino and γ-ray detectors. As all second generation γ-ray telescopes are constructed or planned in the northern hemisphere, neutrino capability must be developed in the southern hemisphere. A South Pole detector can make coincident observations with all existing or planned northern hemisphere γ-ray detectors.

7. There is a year-round station with adequate power (>10 kW) and communication (3 MB/week) as well as an operating air shower array (SPASE) which can be used for calibration and pointing. Station support for experimental activities is excellent. Large fork lifts, cranes, and plows are available to move heavy equipment around the station. Interaction with specialists who spend the winter at the pole maintaining scientific experiments is accomplished through routine electronic mail facilities.

Like planned U.S., European and Soviet ocean and lake detectors, AMANDA exploits Cherenkov technology which is well understood and has been thoroughly tested by experiments[13] such as IMB. Tests in Greenland and at the South Pole have demonstrated that an ice-sheet neutrino detector is very likely to be the most cost effective way to reach the detector volumes required to do neutrino astronomy. We describe the basis for these claims next.

4. Feasibility Studies: Greenland 1990 and South Pole 1991

4.1 Greenland 1990

In an initial study[14] conducted at the GISP-II site in Greenland (72N 38W) during 13--16 August, 1990, muon rate measurements were made to assess the optical clarity of polar ice. A string of three Thorn EMI model 9870 PMTs, each 12 cm in diameter with hemispherical window, was lowered down a 15 cm diameter borehole to a depth of 217 meters, about 100 meters below the firn (packed snow) layer. The event trigger required that all three PMTs produce a digital pulse in coincidence within 30ns. The observed coincidence rate was 1.8 Hz, far higher than the expected rate of purely random coincidences (10^{-2}Hz). By

inserting additional time delays to destroy the real coincidence window, the purely random coincidence rate was directly measured. From previous muon flux measurements and calculations one knows that the vertical muon flux at this depth (217 meters = 180 meters water-equivalent) is 1 muon m^{-2} $s^{-1}sr^{-1}$. The corrected event rate of 1.6Hz, together with the expected vertical flux, indicates that each PMT was sensitive to muons arriving within a radius of 1 meter. In addition, the Monte Carlo studies indicate that if all PMTs were operated at the single photoelectron level (not possible in Greenland due to the high noise rates), the effective area of the string would increase from 3 to 6 m^2.

After visual inspection of the cores, which are at this depth milky and translucent, it was apparent that the Cherenkov photons propagated from muon to PMT by scattering from bubble to bubble. Information on bubbles from the analysis of the ice cores were incorporated into the Monte Carlo program to predict muon rates and pulse height distributions for each PMT. Using the known muon flux and angular distribution, Cherenkov photons were generated from the muon paths and propagated through the bubbly ice. The attenuation length of the light in the clear ice between bubbles was scaled as a fraction of the laboratory values. Good agreement between the predicted and observed pulse height distributions is achieved only if the peak optical attenuation length of the *in-situ* polar ice is greater than about 18 meters, or 75% of the attenuation length measured for pure laboratory ice. Systematic uncertainties in the Monte Carlo(*e.g.*, an observed presence of impurities in the butyl acetate used) would tend to reduce the predicted Monte Carlo rates, so the result should be regarded as a lower limit to the optical clarity of the ice. It is clear that the optics of *in-situ* ice are consistent with laboratory ice.

This is an important result in the sense that the large attenuation length implied by these results indicates that the optical quality of the ice will not be the dominant limiting factor for a real neutrino detector.

4.2 South Pole 91-92

During the last austral summer (Nov. 1991--Feb 1992) hot water drilling was used to position several strings with different PMT sizes and at different depths for further tests of ice quality and for gaining experience in string deployment and operation.

The following detectors are now operating in South Pole ice:

In firn layer:
- 4 PMTs of 5 inch diameter at 75 m, separations .66 m, 2.5 m, .66 m

Below firn layer:
- 4 PMTs of 5 inch diameter at 110 m, separations .66 m, 3.11 m, .66 m
- 2 PMTs of 8 inch diameter at 115 m, separation 2m
- 4 PMTs of 8 inch diameter at 150 m, separation 5m
- 4 PMTs of 3 inch diameter at 800 m, separation 1m

Also a set of 19 PMTs were frozen in 0.5 m of ice in a light-tight backyard swimming pool, constituting a prototype air shower detector of 45 m^2 area.

After spending two months at the south pole, we obtained the following conclusions.

(*i*) Physics:

-- there is no background of beta emitters such as potassium, the dark current of the tubes determines the background counting rate. As a consequence, a two-fold coincidence is sufficient to observe a real muon signal at all depths.

-- optical contact between the pressure vessel and refrozen ice is comparable to the water-module interface. We actually observed a gradual increase over several days of muon counting rates as the ice refreezes . This suggests that the optical contact with the PMT improves as the ice refreezes.

-- counting rates at 800 m are consistent with Monte Carlo predictions assuming bubble-free laboratory ice (see Figure 1).

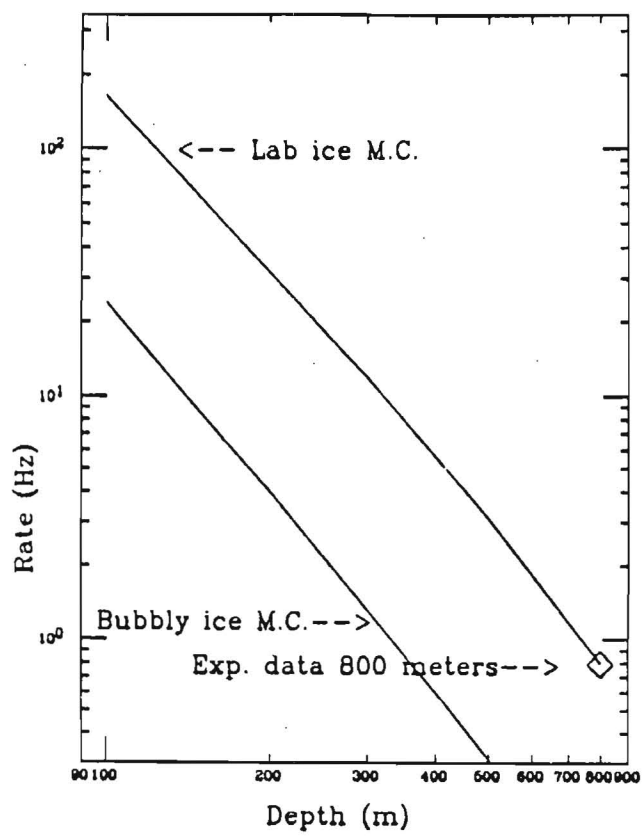

Figure 1: Measured muon rate at 800 m (diamond) is compared with Monte Carlo rates for lab and bubbly ice.

Both the Monte Carlo calculation and the data are preliminary and subject to corrections of order 10%: some inefficiencies in detection are not included in the Monte Carlo nor are live-time corrections. Even at this stage of the analysis we can conclude that 800 m deep ice is free of bubbles and has attenuation length larger than 80% of laboratory ice. Furthermore, the rate of coincidence between SPASE triggers and AMANDA triggers provides an independent check of the optical clarity of the ice. These results are consistent with our conclusions based on the observed muon rates alone.

Our results at 150 m indicate bubbles. This is consistent with the expectation that bubbles disappear around 400 m depth (figure 2).

It is also important to realize that at 1 km depth any residual bubbles are less than 1 micrometer in diameter (Gow, private communication). We computed that the Mie scattering length exceeds the absorption length for bubbles smaller than 7 micrometers in diameter. Furthermore, scattering is sharply peaked in the forward direction. Therefore scattering on possible residual bubbles should not affect our experiment provided it is deployed where bubbles are smaller than a few micrometers in diameter (~ 0.5 km below the surface).

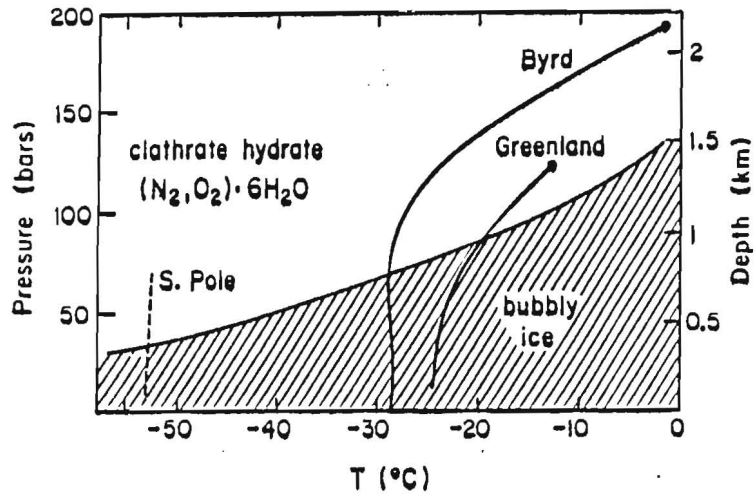

Figure 2: Phase diagram of the transition between bubbly ice and bubble free ice by the formation of the clathrate hydrate structure (ref. 11). Due to the colder temperature of the south polar ice, the transition is expected to occur at a relatively shallow depth of 400 m.

-- a 4 nanosecond FWHM precision in timing resolution, as shown in Figure 3, is achieved with the 8 inch PMTs which are our prototype for AMANDA.

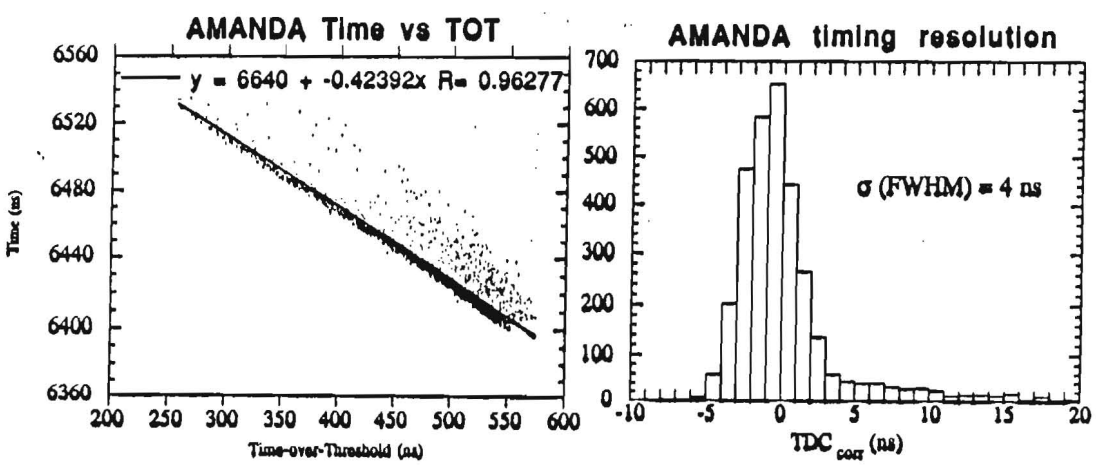

Figure 3: AMANDA timing resolution using the same electronic configuration as shown in figure 6. A short pulse of light (3ns width) was provided by a dye laser/fiber optic system which produces light at a wavelength of 500 nm. A stop pulse was generated by directing a small fraction of the laser output into an PIN photodiode. The left figure plots the time variation (time walk) as a function of the signal size as measured by the time over threshold. The figure on the right results from a linear correction to the time walk.

(*ii*) Technology:

-- equipment survives refreezing. The refreezing process lasts a few days and good optical contact between PMT and ice is established.

-- during refreezing, the pressure at 800 m increased to 170 atmospheres before dropping to equilibrium pressure (70 atm). The Benthos spheres used in the present design are tested and guaranteed for 250 atmospheres.

-- the AMANDA prototype string of 8 inch PMTs was deployed 4 times and submitted to more than unusual abuse. The mechanical design of string and PMT housing is beyond doubt adequate as a final detector design.

-- all drilling was performed with an equipment designed for much warmer ice of Greenland and the Ross Ice Shelf. Nevertheless a depth of 2500 feet was reached. The hole was 14 inches wide. It is now clear that drilling with the appropriate equipment will be totally routine.

4.3 Monte Carlo studies of AMANDA

We have developed two completely independent and complementary Monte Carlo programs simulating the AMANDA detector. The programs have been tested by simulating the effective sensitive areas of the DUMAND and Baikal detectors. We reproduced their results; conversely, we reproduced our own results with DUMAND program. The programs have also been used to optimize the 9 string detector. We conclude that AMANDA with 3 strings has a peak effective area of 2300 m^2 for cosmic ray muons that approach the detector from about 60 degrees below the horizon, with a typical trigger requiring a signal in ≥6 PMTs distributed over at least 3 strings (see Figure 4).

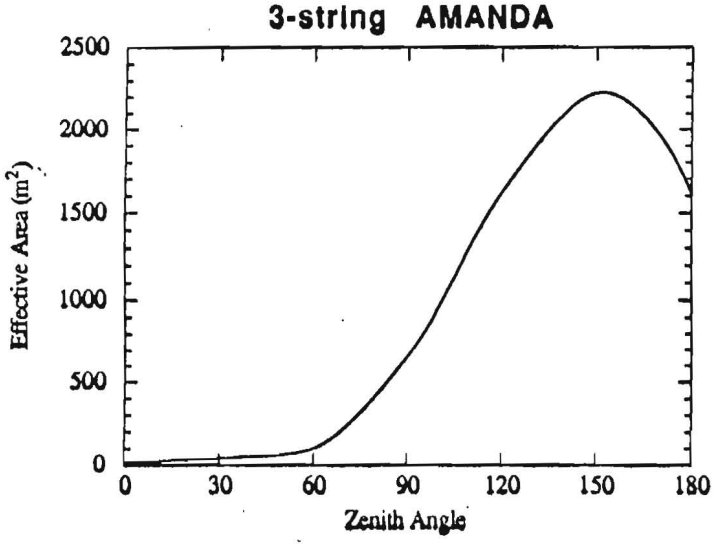

Figure 4: Zenith Angle dependence of effective area for the 3 string AMANDA.

The area quoted depends strongly on trigger requirements. Because of the absence of backgrounds and the high stability of the detector, AMANDA can use a very loose trigger --- remember that any 2 PMTs can establish a muon signal in ice--- with large effective area despite our use of comparatively small PMTs.

The optimal configuration consists of PMTs spaced by 10 m and strings separated by 30 m, i.e. about the attenuation length of the light. Given that cost of implementing a three string array is nominal, and given that the degree of uncertainty in *a priori* Monte

Carlo calculations is very difficult to assess, it is clear that the detector can be much better optimized after the Monte Carlo is fine-tuned with real 3-string data one year from now. Only then will reliable quantitative statements about the area, muon track reconstruction and up-down muon discrimination of the 9-string detector be possible.

5. South Pole as an Integrated Cosmic Ray Facility

South Pole is becoming an integrated facility for cosmic ray studies. With SPASE (South Pole Air Shower Experiment), the 24 detector air-shower array of 6500 m^2 area with an energy threshold of 10^{14} eV, Frozen Pool, a prototype air shower detector 0.5 m deep in ice, MICE (Muons in ICE), a prototype experiment investigating muons in shallow holes, and AMANDA being able to detect also down-going muons in coincidence with the surface detectors, all complementing each other, South Pole would become a major contributor to the future of high energy cosmic ray research.

Currently the detectors of AMANDA, MICE and POOL are all located directly below SPASE and operating in coincidence via synchronized clocks of 1 microsecond accuracy, so that muon events in detectors can be reconstructed and compared with air showers (energy and core direction) detected by the SPASE array. This again provides another measure of muon detection efficiency and reconstruction ability of the array. MICE and AMANDA also provide a sampling of the number of muons with energies greater than 25 GeV and 150 GeV, respectively, in these air showers. Muon content of muon-poor showers are of great value to SPASE/MICE/AMANDA which at the 2800 m height of the South Pole can operate as a gamma ray telescope. The POOL provides an additional 50 m^2 of detection area to SPASE's twenty-four 1 m^2 elements. This additional area will provide much increased timing resolution, and array of such pools would greatly increase SPASE's angular resolution.

6. Detector Design and Data Acquisition

The AMANDA detector will consist of 9 strings of 19 PMTs each (see Figure 5 for a schematic of the prototype string). It will be a modular design so that its basic cell structure could be extended later to any number of strings. Construction will proceed at a rate of 3 strings per season. The PMT spacing will be 10 meters along the strings, and the strings will be arranged in a octagonal pattern separated by 30 meters. Three of the PMTs will view the upward hemisphere, the remaining 16 view downward. (It turns out that 19 cables pack into a convenient "1+6+12" hexagonal structure.) The upward facing PMTs serve at least two purposes. They provide additional background rejection of downward moving muons and, during calibration periods, provide the means of sampling muons generated by air shower events which coincidentally trigger the SPASE air shower array. The latter capability is particularly important for establishing absolute pointing accuracy of the AMANDA array because the SPASE air shower array determines the angular direction of air showers to a accuracy smaller than one degree.

South Pole 1991-92

Prototype String

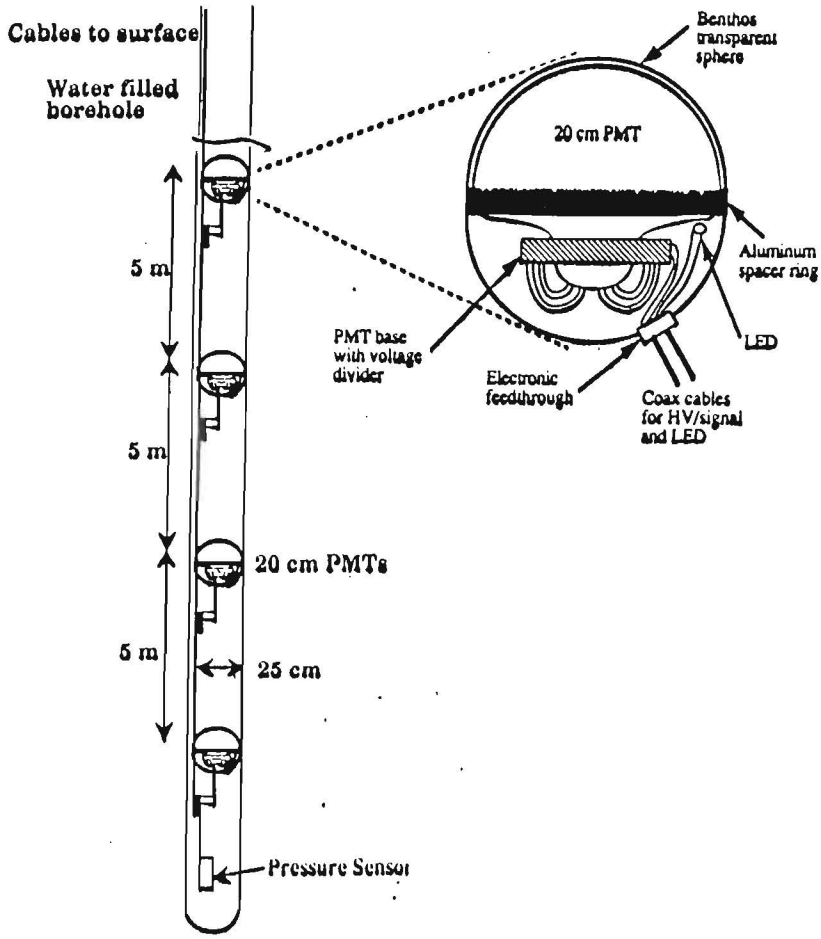

Figure 5: AMANDA prototype string deployed on January 17 1992 at the South Pole.

We have striven to keep the under-ice detectors as simple as possible without compromising performance. All we are doing is copying our successful prototype which is currently operating at the South Pole. This means that only the phototubes will be buried and that their analog signals will be sent to the surface via low-loss RG-59 coaxial cables. All active components including triggering and data acquisition will be located on the ice surface and remain accessible. The 8 inch diameter PMTs are mounted inside of 10 inch glass Benthospheres which are pressure tested to 250 atmospheres, and are optically connected using RTV clear optical gel. Electrical connections are provided by Sea-Con underwater coaxial pressure connectors. The PMT signals which travel over more than one km of cable will be amplified by special purpose, low noise amplifiers. Such a system has now been performing satisfactorily at the pole for over 4 months (at the time of this writing) without failure. The electrical signals at the surface are processed as one would

process signals from any air-shower array except that now the reconstruction is 3-dimensional in nature. Since all PMTs are connected to the surface by a dedicated electrical cable, it is possible to control the gain of all PMTs in the array.

Specifically, the signals will be discriminated (LRS-4413s) and sent to time-digitizers (LRS 2277s) where their arrival times and time-over-threshold (TOT) will be measured. The TOT provides a measure of the PMT pulse-height or total light striking the tube, and can be used to correct the recorded times and provide a measure of the proximity of the particle to the PMT. Flexible hardware trigger strategies are being developed, being mindful of what the DUMAND and Lake Baikal collaborations have learned. In the first year's operation (3, 19-PMT strings) relatively simple and flexible triggers such as 2-2-2, 3-2-1, etc., will be implemented. AMANDA will enjoy the luxury of being able to employ very loose triggers in its initial phases because the PMTs small noise rates will contribute very little to "accidental" triggers. Thus, these "loose" or minimum-bias triggers will allow the full-array trigger problem to be studied in detail off-line in the analysis. A logic diagram is shown in Figure 6.

Both the time and amplitude response of the PMTs will be regularly measured. At appropriate intervals, special PMT calibration runs will be made and this information will be logged onto special data files. This calibration will be provided by a laser/fiber-optic system that has been tested in the Antarctic environment. A 337 nm nitrogen laser will drive a dye-laser system at 500nm. This pulse--about 3 nanosecond in width--will be fanned out and carried via fiber-optic cables to the individual PMTs. A precise start pulse is generated by directing a small fraction of the laser output into an avalanche photodiode. Pulse to pulse variation in the light output of the laser will be monitored by a pyroelectric energy detector. It is possible to attenuate the laser output so that the PMT response at low photoelectron numbers can be calibrated.

Data acquisition uses commercially available CAMAC electronics. The CAMAC electronics are interfaced to a Macintosh computer running the KMAX (Sparrow Corp.) software package which provides data logging and housekeeping functions. Similar systems are being used by the SPASE and other detectors at the south pole. Approximately 3 MBytes of data per week can be sent back to the home institutions via ethernet connections and satellite links. This is sufficient to monitor the performance of all optical modules in the array and identify erratically operating PMTs.

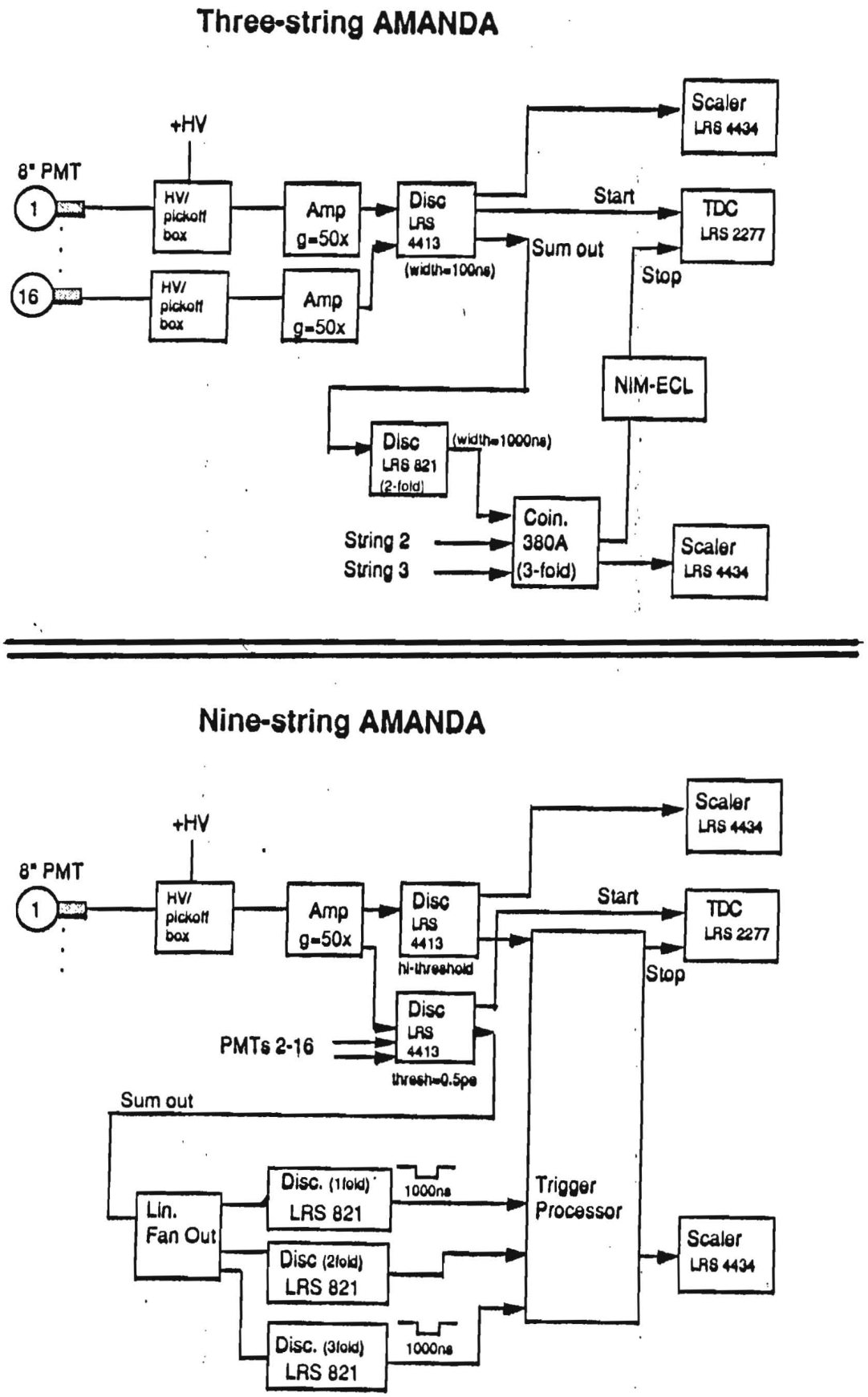

Figure 6: Data logging and trigger logic diagram of 3 and 9 string configurations of AMANDA (for clarity, only one string is shown).

7. Conclusion

Two strings of optical sensors were deployed during the past austral summer at the south pole. The were lowered down water-filled holes that reached a depth of 800 meters. The sensors survived the subsequent refreezing of the water and continue to operate reliably. We have found that the ice is dark , that is the noise rates from the buried PMTs are comparable to the intrinsic noise rates of these detectors. The observed muon rates at a depth of 800 meters is consistent with the assumption that the ice is bubble-free and transparent. Our conclusions about the ice transparency has been independently verified by measuring the coincidence rate between events observed by the SPASE air shower array and muon events observed by the AMANDA strings. Also, we determined that the sensitivity of the optical modules did **not** degrade as the ice refroze around them.

In short, we have demonstrated that south polar ice can be used as part of a large-area neutrino telescope and we have developed an inexpensive and reliable technology that can advantage of this optically clear ice.

---

[1]T.C. Weekes, *Physics Report* C160:1 (1988); T.K. Gaisser, *Science* 247:1049 (1990).

[2]For a recent review, see Barwick et. al., *J. of Phys. G* Nucl. Part. Phys. 18:225 (1992).

[3]Baikal Collaboration, G.V. Domogatsky, in *Proc. of the 3rd Venice Workshop on Neutrino Telescopes*, Venice 1991, ed. M. Baldo-Ceolin Feb.1991.

[4]P.L. Biermann, in *Astrophysical Aspects of the Most Energetic Cosmic Rays*, (Kofu, Japan, November 1990).

[5]F.W. Stecker, C. Done, M.H. Salamon and P. Sommers, *Phys. Rev. Lett.* 66:2697 (1991); L. Bergstrom, R. Liotta and H. Rubinstein, *Phys. Lett.* B276:231 (1992). Muon rates from AGN's in underground detectors have also been studied in reference 2 and by T. K. Gaisser, P. Lipari and T. S. Stanev (Bartol Research Foundation), J. G. Learned and V. J. Stenger (University of Hawaii), private communication.

[6]see e.g. V.S. Berezinsky *et al.*, *Astrophysics of Cosmic Rays*, (Elsevier, 1991).

[7]F.W. Stecker, *Astrophys. Journal* 228:919 (1979) ; T.K. Gaisser, F. Halzen and T. Stanev, *Proceedings of the 22nd International Cosmic Ray Conference*, (Dublin, Ireland, 1991).

[8]F. Halzen, M. Kamionkowski and T.Stelzer, *Phys. Rev. D* (in press).

[9]M.A. Doncheski, F. Halzen and T. Stelzer, *Phys. Rev. D* (in press).

[10]F. Halzen and J. G. Learned, in *Proceedings of the 5th International Symposium on Very High Energy Cosmic Ray Interactions*, (Lodz, Poland, 1988); F. Halzen, J. Learned, and T. Stanev, *AIP Conference Proceedings*, No.198 (editors: Mullan, Pomerantz, and Stanev, American Institute of Physics, New York, 1989), p.39; S. W. Barwick and F. Halzen, in *Proc. Summer Study of High Energy Physics* , (Snowmass, CO 1990).

[11]A.J. Gow and T. Williamson, *Cold Regions Research and Engineering Lab. Research Report* 339 (1975).

[12]S.L. Miller, *Science* 165:489 (1969).

[13]For a review see, J.G. Learned in *Proc. of the 2nd Venice Workshop on Neutrino Telescopes*, Venice 1990, ed. M. Baldo-Ceolin Feb.1990; The DUMAND Collaboration Rep. No. HDC-3-82 (Hawaii DUMAND Center, 1988).

[14]AMANDA Collaboration, D. Lowder *et al.*, *Nature*, 353:331 (1991).